6 4 1

6 4 2

6 4 3

Service Manual

Doosan purchased Bobcat Company from Ingersoll-Rand Company in 2007. Any reference to Ingersoll-Rand Company or use of trademarks, service marks, logos, or other proprietary identifying marks belonging to Ingersoll-Rand Company in this manual is historical or nominative in nature, and is not meant to suggest a current affiliation between Ingersoll-Rand Company and Bobcat Company or the products of either.

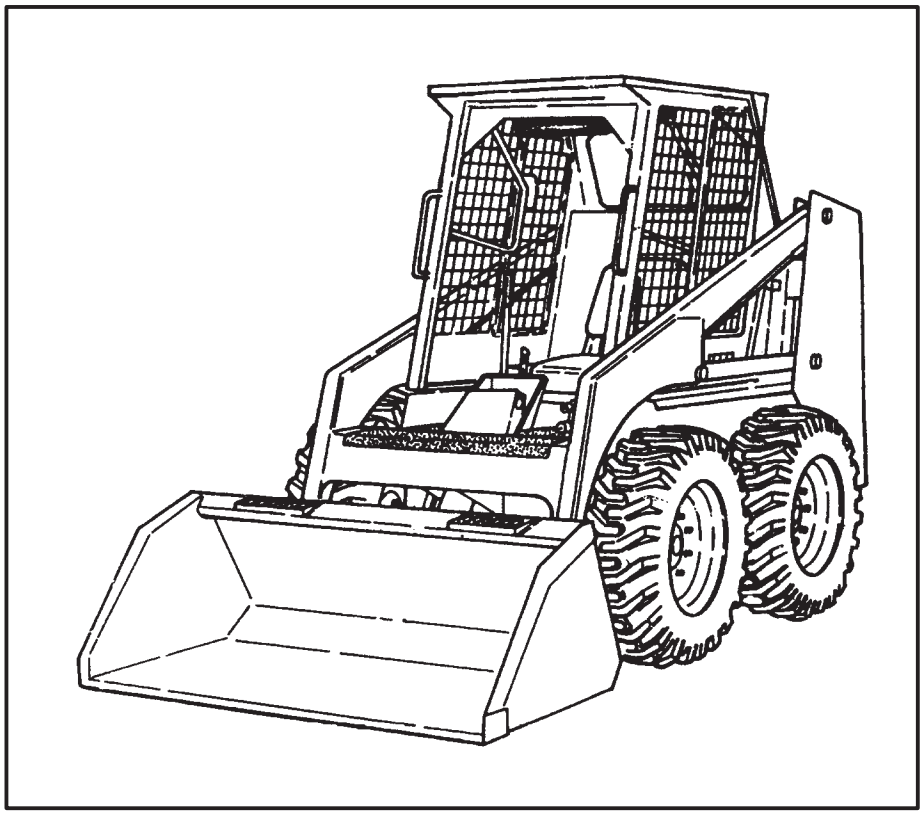

Dealer Copy -- Not for Resale

MELROE
INGERSOLL-RAND

bobcat®

6566135 (6-12) Printed in U.S.A.

MAINTENANCE SAFETY

WARNING

Instructions are necessary before operating or servicing machine. Read and understand the Operation & Maintenance Manual, Operator's Handbook and signs (decals) on machine. Follow warnings and instructions in the manuals when making repairs, adjustments or servicing. Check for correct function after adjustments, repairs or service. Untrained operators and failure to follow instructions can cause injury or death.
W-2003-0903

Safety Alert Symbol: This symbol with a warning statement, means: "Warning, be alert! Your safety is involved!" Carefully read the message that follows.

CORRECT

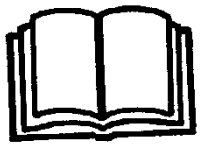

B-10731a

- **Never service the Bobcat Skid-Steer Loader without instructions.**

CORRECT

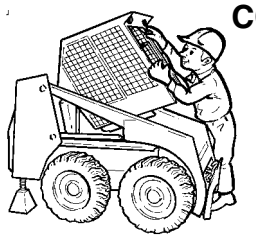

B-12365

- **Use the correct procedure to lift or lower operator cab.**

CORRECT

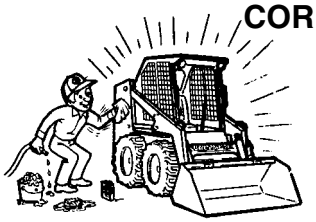

B-7469

- **Cleaning and maintenance are required daily.**

WRONG

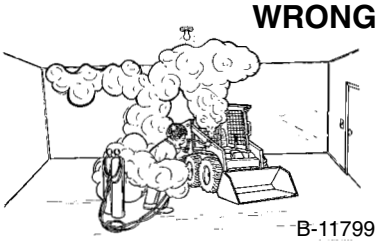

B-11799

- **Have good ventilation when welding or grinding painted parts.**
- **Wear dust mask when grinding painted parts. Toxic dust and gas can be produced.**
- **Avoid exhaust fume leaks which can kill without warning. Exhaust system must be tightly sealed.**

WRONG

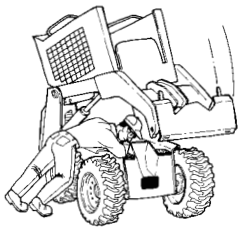

B-15231

- **Disconnecting or loosening any hydraulic tubeline, hose, fitting, component or a part failure can cause lift arms to drop. Do not go under lift arms when raised unless supported by an approved lift arm support device. Replace it if damaged.**

WRONG

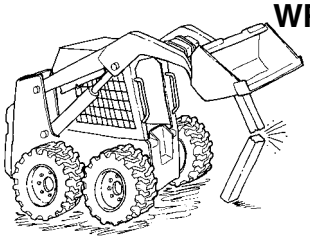

B-15280

- **Never work on loader with lift arms up unless lift arms are held by an approved lift arm support device. Replace if damaged.**
- **Never modify equipment or add attachments not approved by Bobcat Company.**

WRONG

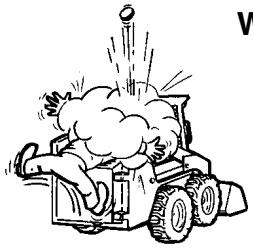

B-6590

- **Stop, cool and clean engine of flammable materials before checking fluids.**
- **Never service or adjust loader with the engine running unless instructed to do so in the manual.**
- **Avoid contact with leaking hydraulic fluid or diesel fuel under pressure. It can penetrate the skin or eyes.**
- **Never fill fuel tank with engine running, while smoking or when near open flame.**

WRONG

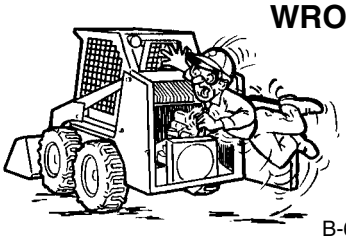

B-6580

- **Keep body, jewelry and clothing away from moving parts, electrical contact, hot parts and exhaust.**
- **Wear eye protection to guard from battery acid, compressed springs, fluids under pressure and flying debris when engines are running or tools are used. Use eye protection approved for type of welding.**
- **Keep rear door closed except for service. Close and latch door before operating the loader.**

WRONG

B-6589

- **Lead-acid batteries produce flammable and explosive gases.**
- **Keep arcs, sparks, flames and lighted tobacco away from batteries.**
- **Batteries contain acid which burns eyes or skin on contact. Wear protective clothing. If acid contacts body, flush well with water. For eye contact flush well and get immediate medical attention.**

Maintenance procedures which are given in the Operation & Maintenance Manual can be performed by the owner/operator without any specific technical training. Maintenance procedures which are **not** in the Operation & Maintenance Manual must be performed **ONLY BY QUALIFIED BOBCAT SERVICE PERSONNEL. Always use genuine Bobcat replacement parts.** The Service Safety Training Course is available from your Bobcat dealer.

MSW01-0805

Bobcat®

SAFETY IS YOUR RESPONSIBILITY

We care about your safety.

The Bobcat loader is designed to give maximum operator safety; but no machine design can prevent operator error or carelessness.

BEFORE YOU WORK ON THE BOBCAT LOADER

This SERVICE MANUAL was written to give theserviceman (mechanic) instructions for safe adjustments and/or repairs of the Bobcat loader.

Read the complete sequence in the paragraph (Example: 4–3.1 Axle and Bearing Removal Steps 1 thru 14) so you know the complete removal procedure before the work is actually started.

Always use jackstands and lift arm stops so you have a safe working area around the Bobcat loader.

B–03926

For your safety , warnings are on the loader and in the manual. Failure to follow these warnings can cause injury or death.

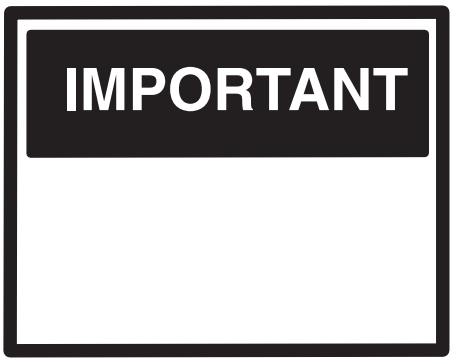

This notice shows important procedures which must be followed to prevent damage to the loader.

FORWARD

This Service Manual gives the instructions for correctservicing, adjustment and overhauling of the Bobcat loader Hydraulic/Hydrostatic System, Drive System, Main Frame, Electrical System and Engine Service.

Make reference to the Operator 's Manual for operating instructions (Starting, Daily Checks, Loader Operation, etc.).

A general inspection of the following items must be made when the Bobcat loader has had service or repair.

1. Check hydraulic/hydrostatic fluid level, engine oil level and fuel supply.
2. Inspect for any sign of fuel, oil or hydraulic fluid leaks.
3. Lubricate the loader.
4. Check the condition of the battery(ies) and the cables.
5. Inspect the air cleaner system for damage or leaks.
6. Check the warning lights to see if they light.
7. Check tires for wear and pressure.
8. Check the Bob–Tach for wear and see if the wedges are damaged.
9. Check the safety items for condition (Operator Guard, Seat Belt, Seat Bar, Safety Signs (Decals), Safety Treads, etc.).
10. Make an inspection for loose or broken parts or connections.
11. Operate the loader, checking all functions.

Check the above items. If any are in need of repair or adjustment, contact the owner.

CONTENTS

PREVENTIVE MAINTENANCE

WARNING

Instructions are necessary before operating or servicing machine. Read Operation & Maintenance Manual, and signs (decals) on machine. Follow warnings and instructions in the manuals when making repairs, adjustments or servicing. Check for correct function after adjustments. repairs or service. Failure to follow instructions can cause injury or death.

W–2144–0189

bobcat®

1–PREVENTIVE MAINTENANCE

1–1 INTRODUCTION

The Preventive Maintenance Section of this Service Manual gives general maintenance procedures for the Bobcat loader. The other sections of the Service Manual will give the detailed description needed for disassembly and assembly and when replacement parts are needed.

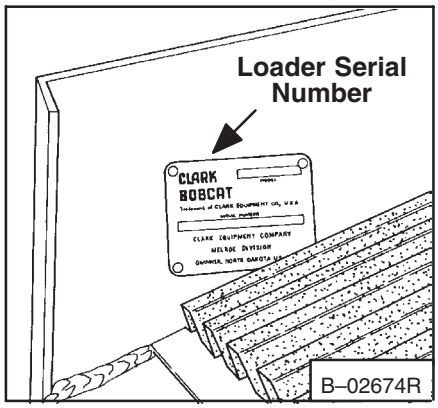

Fig. 1–1 Loader Serial Number

1–1.1 Serial Number Identification

It is important to make correct reference to the Serial Number of the Bobcat loader and/or engine when making repairs or ordering parts. It is possible that the present loaders do not use all the same parts as the earlier loaders. It is possible that different procedures are used for service repair.

1–1.2 Loader Serial Number

The Bobcat loader serial number plate location is on the inside of the left upright, above the grill (Fig. 1–1).

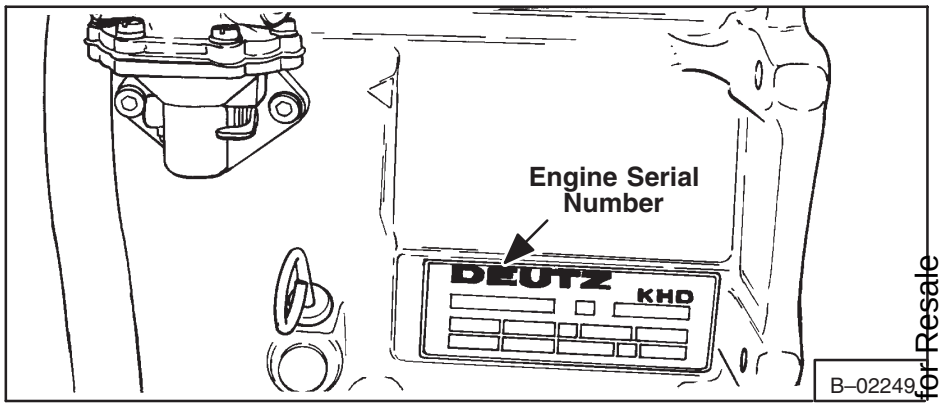

Fig. 1–2 (641) Engine Serial Number

Explanation of the Serial Number:

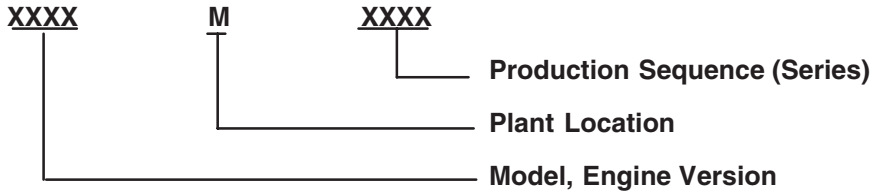

1–1.3 Engine Serial Number

641 Deutz: (Fig. 1–2) The engine serial number location is on the right side of the cylinder block. Use all the numbers when ordering parts for this engine.

642 Ford: (Fig. 1–3) The engine serial number location is on the right side of the valve cover. Use all the numbers when ordering parts for this engine.

643 Kubota: (Fig. 1–4) The engine serial number location is on the left side above the speed control arm. Use all the numbers when ordering parts for this engine.

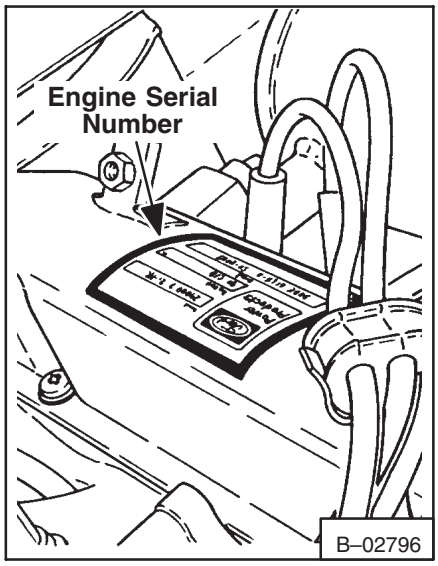

Fig. 1–3 (642) Engine Serial Number

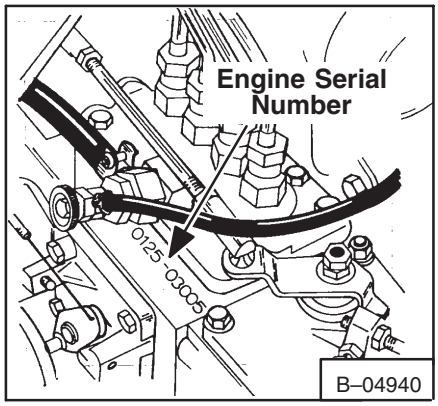

Fig. 1–4 (643) Engine Serial Number

bobcat®

1–2 SERVICE SCHEDULE

Maintenance work must be done at regular intervals. Failure to do so will result in damage to the Bobcat loader or th e engine. The *SERVICE SCHEDULE* is a guide for correct maintenance of theBobcat loader. DO NOT change this service schedule unless the frequency of service is increased when the Bobcat loader is operated in very hot, cold, dusty o r corrosive conditions.

SERVICE SCHEDULE					HOURS						
641	642	643	ITEM	SERVICE REQUIRED	8–10	50	100	250	300	500	1000
■	■	■	Engine Air Cleaner	Clean dust cup. Check condition of system. Check condition indicator.	■						
□	■	■	Engine Cooling System	Check coolant level. Add coolant when level is low. Remove debris from the radiator grill area.	■						
■	■	■	Tires	Check air pressure & check for damage.	■						
■	■	■	Wheel Nuts	Tighten nuts 70 ft.–lbs. (95 Nm) torque.	■						
■	■	■	Engine Oil	Check & add oil as needed.	■						
■	■	■	All Pivot Points	Add lubricant to all fittings.	■						
■	□	□	Engine Cooling Inlet	Check rear door grill & blower inlets for restriction of air flow. Clean cooling fins & blower housing when necessary.	■						
■	■	■	Indicators, etc.	Check for correct operation of all.	■						
■	■	■	Operator Cab	Check condition of cab & fastening bolts.	■						
■	■	■	Seat Belt & Seat Bar	Check condition of strap & buckle & replace if damaged. Check working condition of seat bar.	■						
■	■	■	Hydraulic Fluid	Check & add recommended fluid as needed.		■					
■	■	■	Safety Signs (Decals)	Check for damage decals or decals that are gone. Replace as needed.		■					
■	■	■	Engine Oil & Filter	Change the oil & the filter.		■					
■	■	■	Battery	Check water level & cables.		■					
■	■	■	Hydraulic Tubes & Hoses	Check for damage or leaks. Replace as needed.		■					
■	■	■	V–Belts	Check tension & make adjustments.		■					
□	■	□	Crankcase Breather	Clean breather cap every oil change.		■					
■	■	■	Bob–Tach	Check locking levers & wedges for condition & operation.		■					
■	■	■	Brakes	Check operation & adjust as needed.		■					
■	■	■	Chaincase Fluid	Check fluid level & add as needed.			■				
■	■	■	Hydraulic Filter (10 Micron)	Replace the filter element (S/N 14999 & Below).			■				
□	■	□	Engine Cylinder Head Bolts	Tighten to correct torque after first 100 hours & adjust the valves as needed.			■				
■	■	■	Engine Air Cleaner	Check system for leaks. Replace element when condition indicator shows red.			■				
■	□	□	Crankcase Breather	Remove the breather & clean.			■				
□	■	□	Governor	Check oil level in the reservoir.			■				
■	■	■	Main Frame Upright	Check the torque of the bolts that hold the transmission assembly to the upright.			■				
■	■	■	Spark Arrestor Muffler	Remove the plug & clean the spark chamber.			■				
■	■	■	Steering Lever Pivots	Grease pivot points.				■			
■	■	■	Engine Cylinder Compression	Check compression. Repair as needed.				■			
■	□	■	Engine Fuel Filter	Replace the filter element.				■			
■	■	■	Universal Joint	Grease U–joint.				■			
■	■	■	Starting Motor	Remove, clean & service as needed.					■		
□	■	□	Engine Fuel Filter (Inline)	Replace the element.					■		
■	■	■	40 Micron Filter, Bronze (if so equipped)	Replace the filter in port block.						■	
■	■	■	Hydraulic/Hydrostatic Reservoir	Replace breather cap.						■	
□	□	■	Engine Compression	The minimum compression reading must be at least 75% of maximum compression reading.							■
■	■	■	Chaincase	Replace fluid.							■
■	■	■	Hydraulic System	Replace the fluid and filter. Clean cap and vent.							■

WARNING

AVOID INJURY OR DEATH

Stop, cool and clean engine of flammable material. Never service or adjust loader with engine running unless instructed to do so in manual.

W–2061–0887

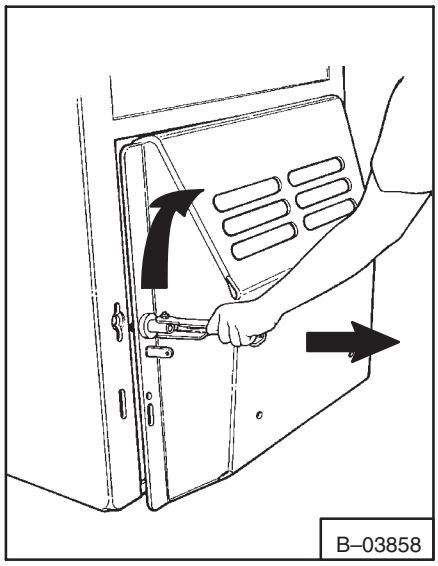

Fig. 1–7 Releasing Rear Door

1–3.1 Opening and Adjusting The Rear Door

Open the rear door to service the engine. Pull the door latch up and to the left to release the door latch (Fig. 1–7). The door can then be fully opened to get to the engine.

The door latch is adjusted by loosening the set screw. Turn the nut on the end of the latch pin (Fig. 1–8). The door must contact the machine at the bottom (Fig. 1–9) and the top with the lever in the position shown in figure 1–9. It will take approximately 50 lbs. of force to push the latch down. When the latch is adjusted correctly, tighten the set screw. The set screw must be aligned with the flat surface of the bolt.

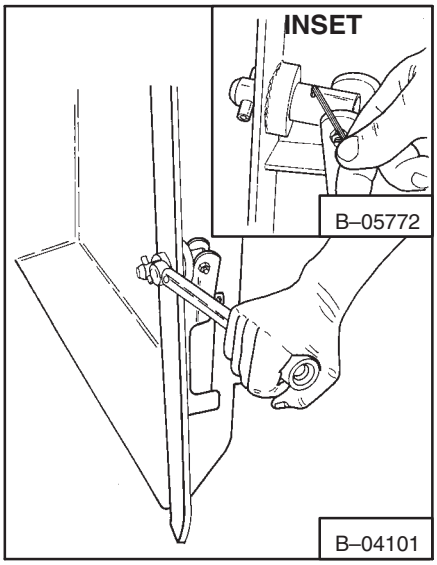

Fig. 1–8 Locking Nut

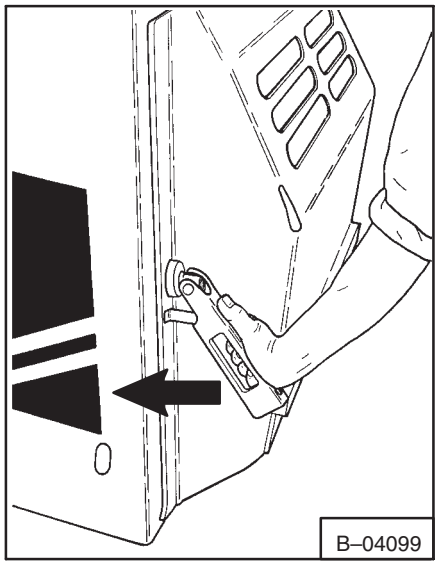

Fig. 1–9 Closing Door

WARNING

Keep the rear door closed when operating the machine. Failure to do so could seriously injure a bystander.

W–2020–1285

1–3.2 Engine Lubrication System

To check the oil level, stop the engine and remove the dipstick from the engine (Fig. 1–10, 1–11, 1–12, Items 1).

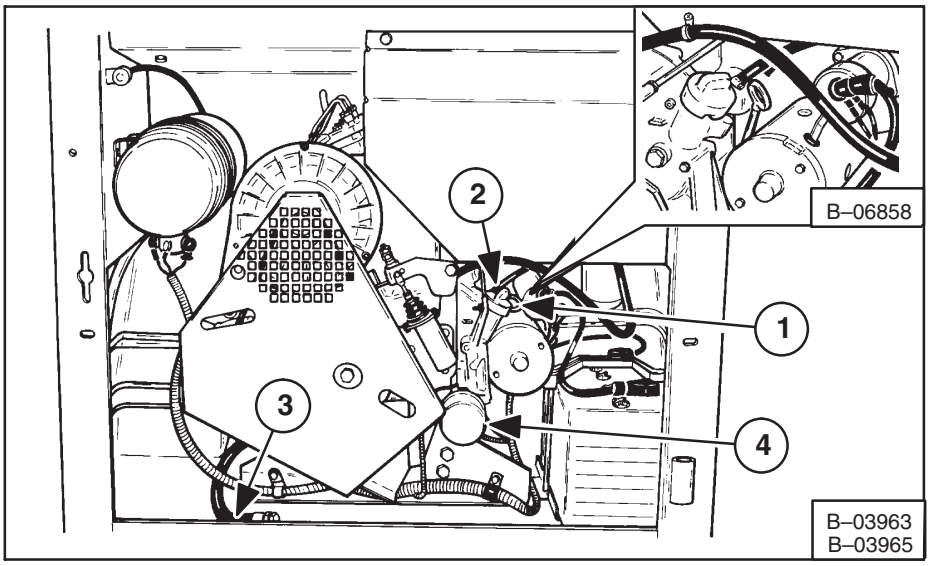

Fig. 1–10 Engine Servicing (641)

The oil level must be kept between the two marks on the dipstick.

Use a good quality motor oil that has the correct API Service Classification (See the Chart on page 1–6).

To add oil remove the fill cap (Fig. 1–10, 1–11, 1–12, Items 2)

642 Loader Only: Check the governor oil level every 100 hours of loader operation. Use the following procedure to check the oil level:

1. Remove the check plug (Fig. 1–12A, Item 1).

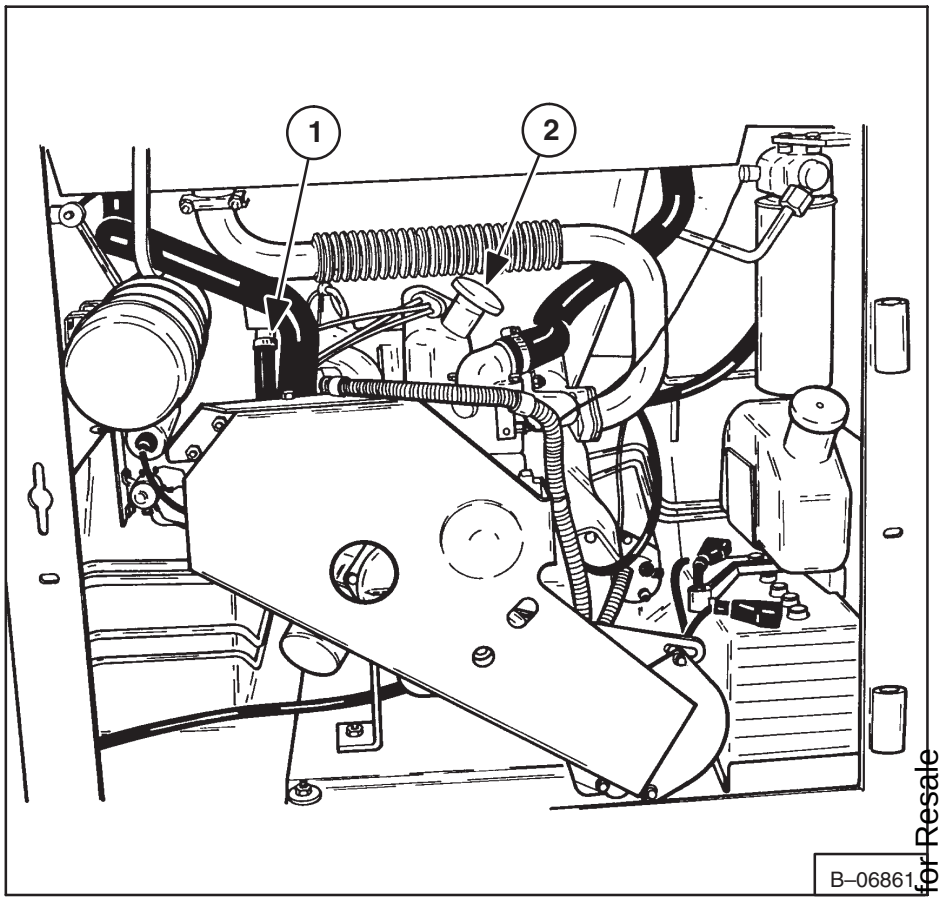

Fig. 1–11 Engine Servicing (642)

2. If oil flows, the level is correct.

3. If no oil flows, remove the fill plug (Fig. 1–12A, Item 2) and add SAE 10W–30 or 10W–40 oil until it flows from the check plug hole.

4. Install and tighten the check plug and the fill plug.

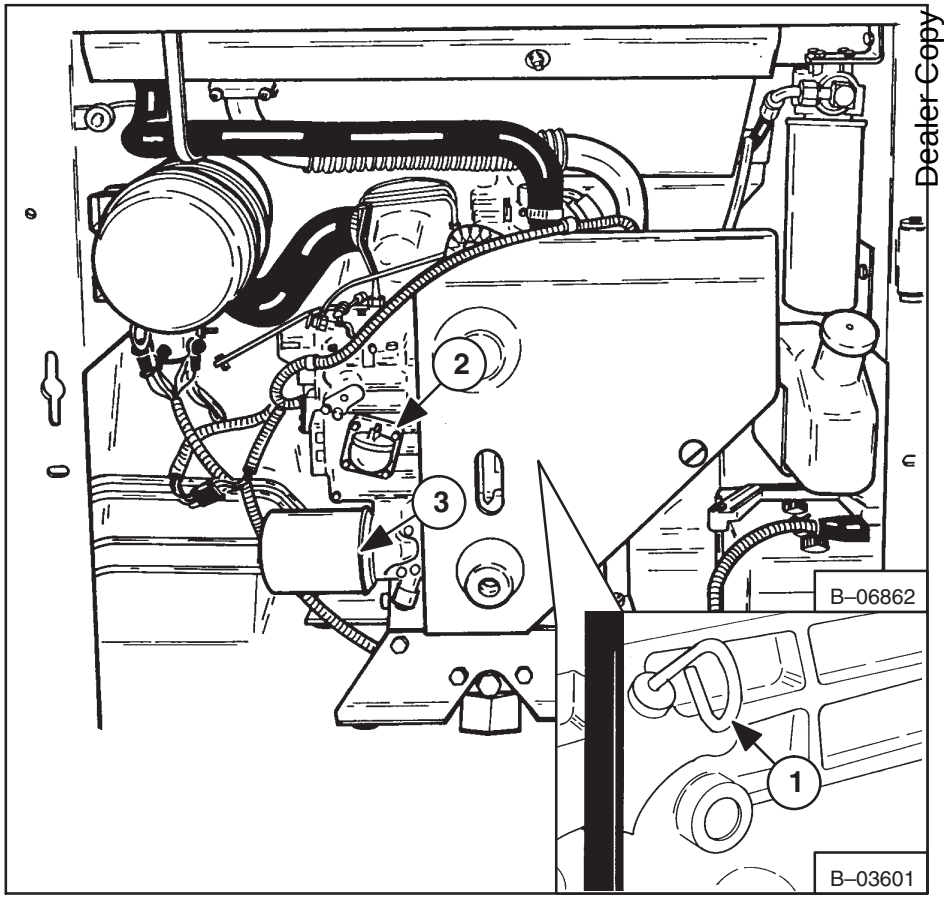

Fig. 1–12 Engine Servicing (643)

1–3.3 Replacement Of Engine Oil And Filter

Replace the engine oil and filter every 50 hours of loader operation.

RECOMMENDED SAE VISCOSITY NUMBER
(LUBRICATION OILS FOR ENGINE CRANKCASE)

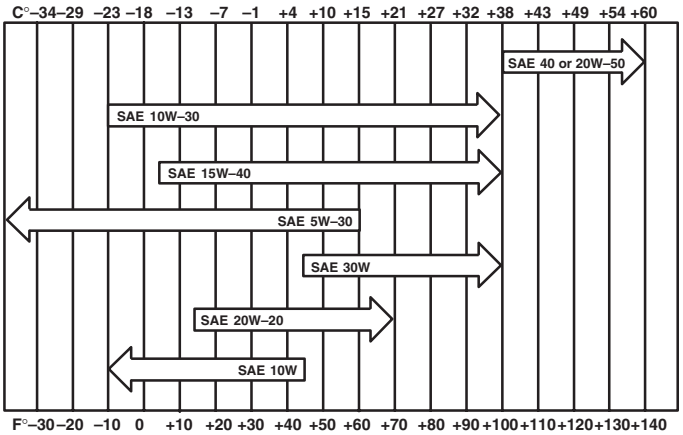

TEMPERATURE RANGE ANTICIPATED BEFORE NEXT OIL CHANGE
(GASOLINE: USE API CLASSIFICATION SE OR SF)
(DIESEL: USE API CLASSIFICATION CC OR CD)

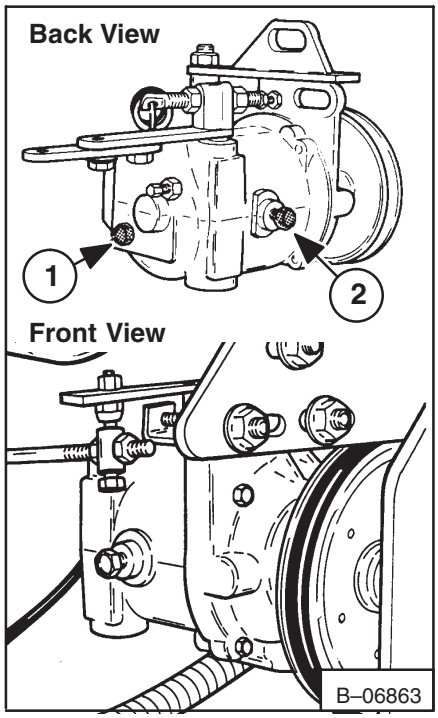

Fig. 1–12A Governor OIl Level Check

To replace engine oil and filter:

1. Operate the engine for approximately 15 minutes. Stop the engine.
2. Remove the oil plug (641, Fig. 1–10, Item 3) (642, Fig. 1–13, Item 1) (643, Fig. 1–14, Item 1).
3. Remove the oil filter (641, Fig. 1–10, Item 4) (642, Fig. 1–13, Item 2) (643, Fig. 1–12, Item 3).
4. Clean the filter housing surface. Put clean oil on the gasket of the new filter. Install the filter and tighten the filter hand tight.
5. Install the oil plug. Remove the oil filler cap (641, Fig. 1–19, Item 2) (642, Fig. 1–11, Item 2) (643, Fig. 1–12, Item 3).
6. Put in the correct oil (See the chart above). Put in the correct amount of oil (641, See Paragraph 8A–1.8, Page 8A–2) (642, See Paragraph 8B–1.8, Page 8B–2) (643, See Paragraph 8C–1.7, Page 8C–2).
7. Start the engine and let it run for 5 minutes. Stop the engine. Check for leaks at the filter. Check the oil level and add oil until the oil level is at the top mark on the dipstick.

NOTE: DO NOT over–fill the crankcase with oil.

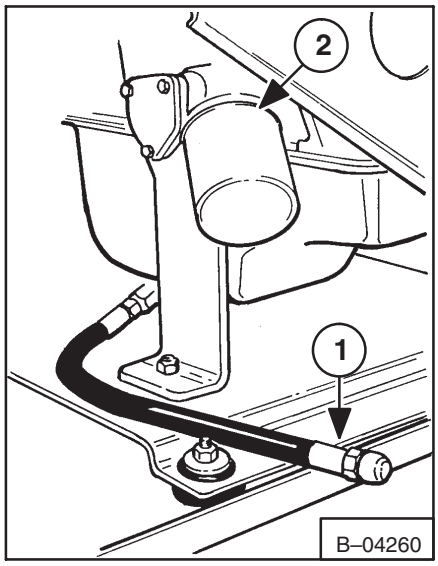

Fig. 1–13 Oil Plug (642)

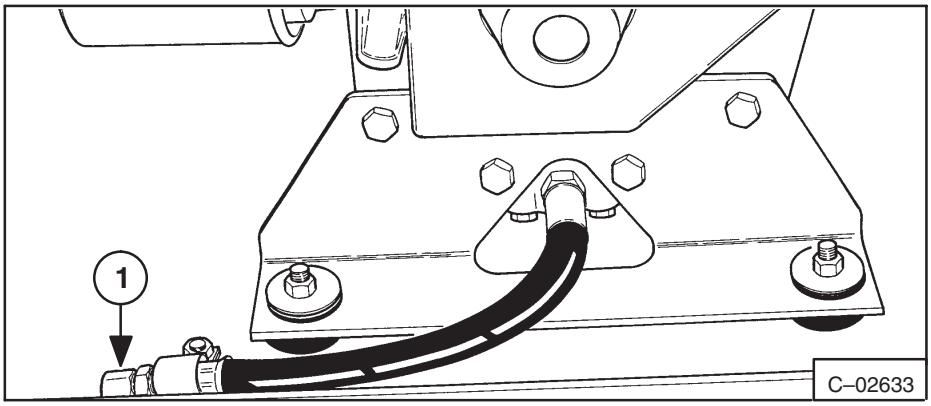

Fig. 1–14 Oil Plug (643)

1–3.4 Air Cleaner Service

It is important to service the aircleaner system at regular intervals for good engine performance and long service life.

Do not replace the filter element unless the red ring shows in the condition indicator (641 & 643, Fig. 1–15, Item 1; and 642, Fig. 1–16, Item 1).

The air cleaner system must be clean and must not be damaged for good engine performance and long service life.

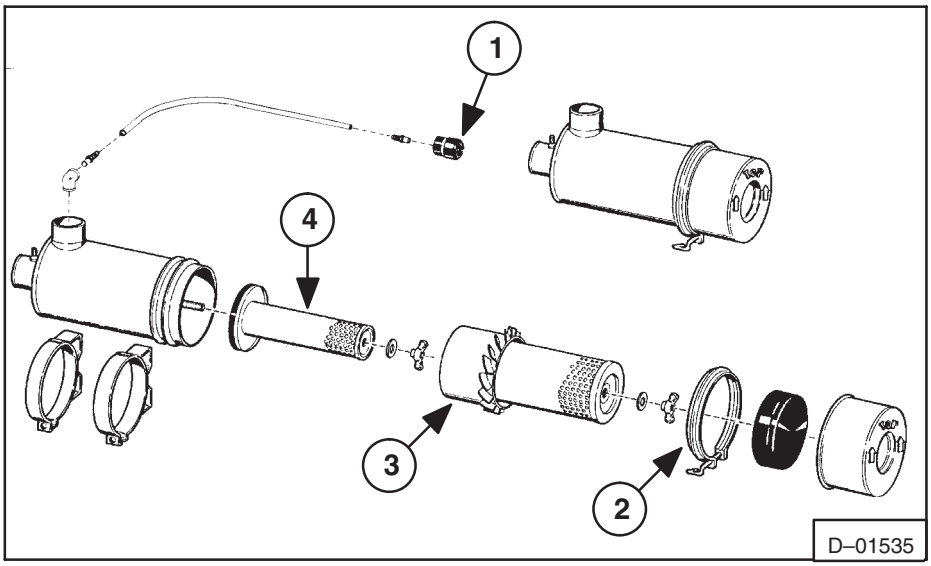

Fig. 1–15 Air Cleaner Service (641, 643)

Service the 641 and 643 air cleaners as follows:

1. Loosen the clamp on the dust cup (Fig. 1–15, Item 2). Remove the dust cup and the element.
2. Clean the inside of the filter housing so the element has a smooth surface to contact at the seal (Fig. 1–15, Item 3).
3. Install the outer element.

NOTE: Replace the inner element (Fig. 1–15, Item 4) approximately every third time unless the red ring still shows in the condition indicator after replacing the outer element.

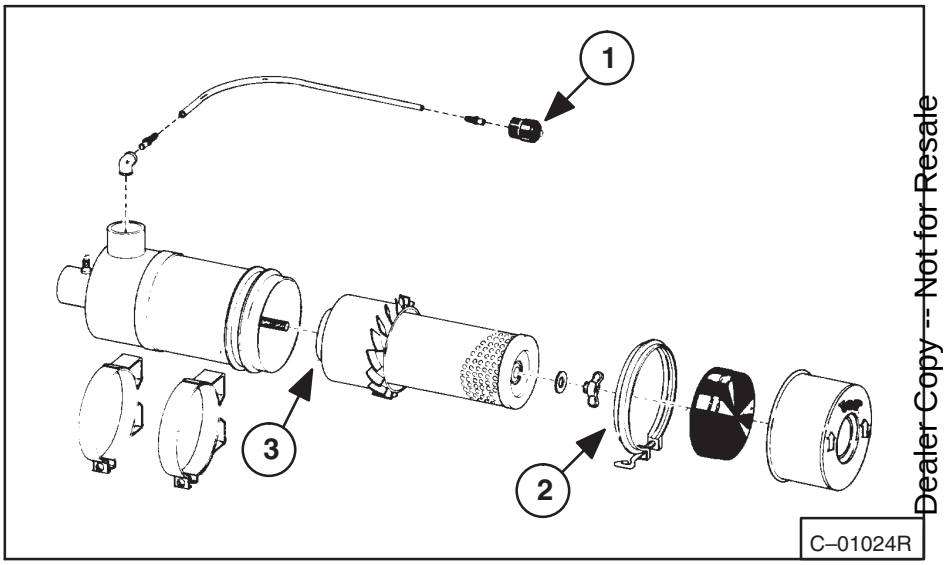

Fig. 1–16 Air Cleaner Service (642)

4. Install the dust cup with the arrows on the bottom of the cup up and tighten the clamp.
5. Push the button on the condition indicator to remove the red ring.
6. Check that the hoses and the clamps are tight.

Service the 642 air cleaner as follows:

1. Loosen the clamp on the dust cup (Fig. 1–16, Item 2). Remove the dust cup and the element.
2. Clean the inside of the filter housing so the element has a smooth surface to contact the seal (Fig. 1–16, Item 3).

3. Install the new filter element.

4. Install the dust cup so the arrow on the bottom of the cup is up and tighten the clamp.

5. Push the button, at the condition indicator (Fig. 1–16, Item 1) to remove the red ring.

6. Check that the hoses and the clamps are tight.

1–4 FUEL SYSTEM

(641 & 643)
Use number 2 diesel fuel in the engine. During very cold temperature conditions number 1 fuel is recommended.

(642)
Use only 90–94 octane leaded fuel in the engine.

(641, 642 & 643)

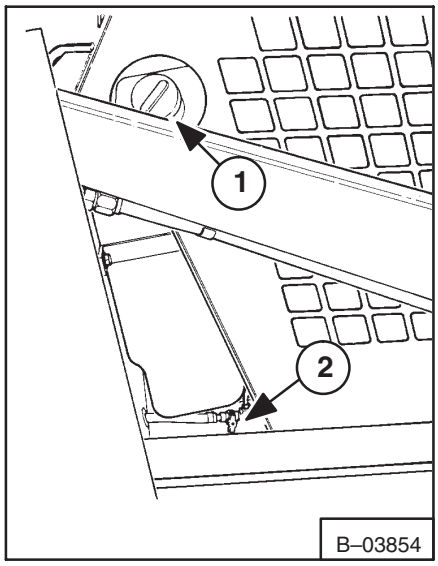

Fig. 1–17 Fuel Filling Location (641,643)

WARNING

Stop and cool the engine before adding fuel. NO SMOKING! Failure to obey warnings can cause an explosion or fire.

W–2063–0887

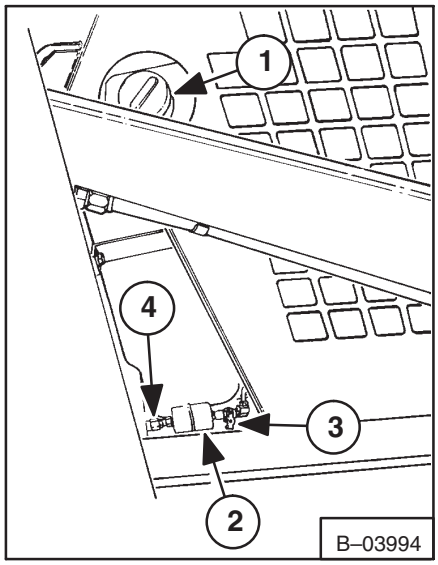

Fig. 1–18 Fuel Filling Location (642)

Remove the filler cap to service the fuel tank as follows (Fig. 1–17 & 1–18, Items 1):

1. Use a clean approved safety container to add fuel.

2. The key switch must be off and the engine must be cool.

3. Add fuel only in an area that has a free movement of air and no open flames or sparks. NO SMOKING (Fig. 1–19).

4. Use only clean fuel of the correct specifications.

5. Tighten the cap on the fuel tank (Fig. 1–17 & 1–18, Items 1).

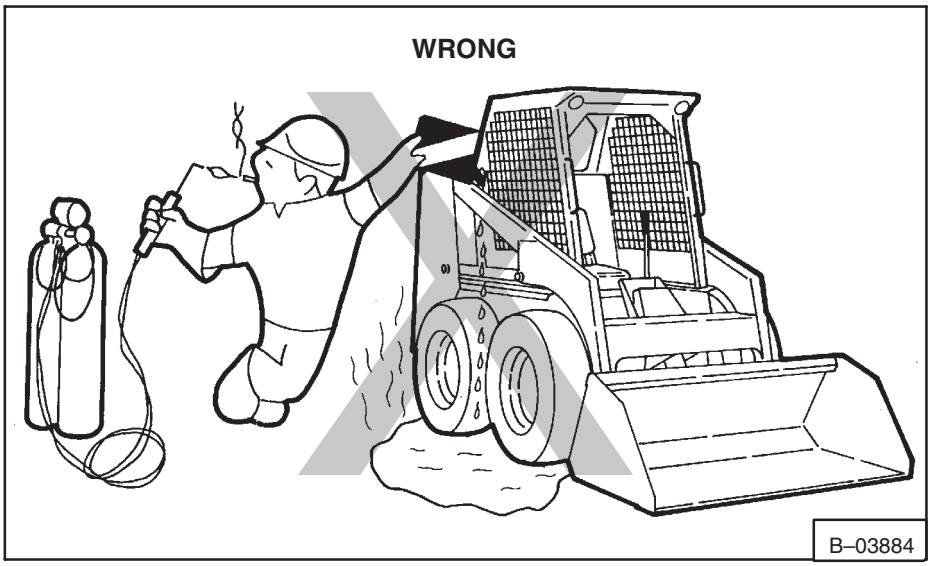

Fig. 1–19 Fuel Filling Procedure

1–4.1 Fuel Filter (641)

The fuel filter is installed on the right upright in the engine compartment. To replace the element:

1. Close the fuel line shut off valve (Fig. 1–17, Item 2).

2. Remove the filter by removing the bolt (Fig. 1–20, Item 1).
3. Put lubricant on the rubber gasket of the fuel filter.
4. After installing the new element, open the fuel valve and check for leaks.

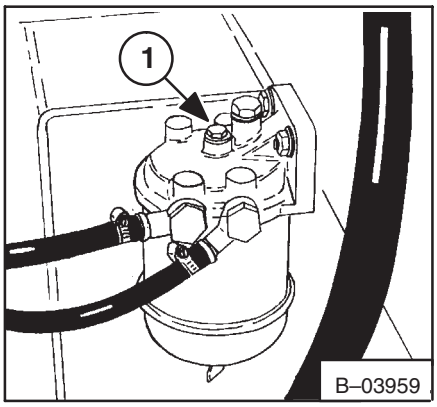

Fig. 1–20 Fuel Filter Service (641)

1–4.1 (Cont'd) Fuel Filter (642)

There is a fuel filter in the fuel line by the fuel shut–off valve (Fig. 1–18, Item 2).

Check or replace the fuel filter as follows:

1. Close the valve on the fuel line (Fig. 1–18, Item 3).
2. Loosen the nut and remove the tubeline (Fig. 1–18, Item 4).
3. Remove the filter element from the valve (turn the element clockwise).
4. Force air through the element in the direction of the arrow to check the filter
5. Make sure the arrow is pointing in the direction of the carburetor when you install the element.
6. Install the element. Connect the tubeline and tighten the nut. Open the valve and check for leaks.

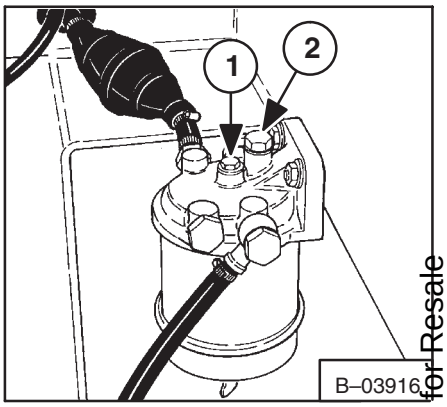

Fig. 1–21 Fuel Filter (643)

1–4.1 (Cont'd) Fuel Filter (643)

The fuel filter on the 643 is installed on the right upright in the engine compartment. To replace the element:

1. Close the fuel line shut–off valve (Fig. 1–17, Item 2).
2. Remove the filter by removing the top screw (Fig. 1–21, Item 1).
3. Check the seal for damage and the surface where the seal makes contact. Repair as needed.
4. After installing the new element open the fuel shut–off valve. Loosen the plug on the top of the filter head (Fig. 1–21, Item 2). DO NOT tighten the plug until the fuel flows from around the plug. Then tighten the plug.
5. Check for leaks.

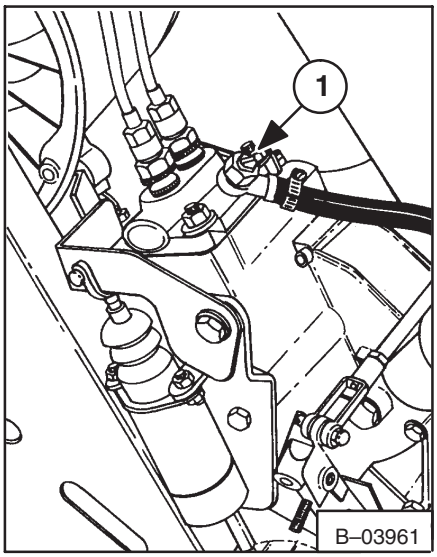

Fig. 1–22 Loosen The Slotted Plug (641)

1–4.2 Removing Air From The Fuel System (641)

After replacement of the fuel filter element or when the fuel tank has run out of fuel, air must be removed from the fuel system before running the engine.

To remove air:

1. Loosen the slotted plug on the injector pump (Fig. 1–22, Item 1) and activate the priming lever on the fuel pump until fuel is flowing from the loosened plug containing no air.

2. Loosen the pressure fitting at each injector (Fig. 1–23, Item 1) and turn the engine until fuel flows from the fittings containing no air Tighten the fittings.

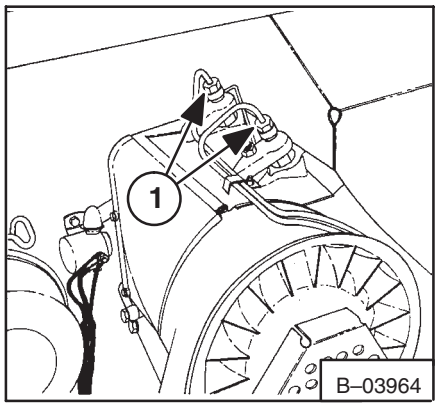

Fig. 1–23 Injector Lines (641)

1–4.2 Removing Air From The Fuel System (643) (Cont'd)

After replacement of the fuel filter element, or when the fuel tank has run out of fuel, air must be removed from the fuel system before starting the engine.

To remove the air:

1. Put the throttle at minimum RPM. Loosen the valve (Fig. 1–24, Item 1) on the top of the injector pump and squeeze the bulb several times (Fig. 1–21, Item 3). Turn the engine over with the starter. When the engine starts and runs smoothly, close the valve.

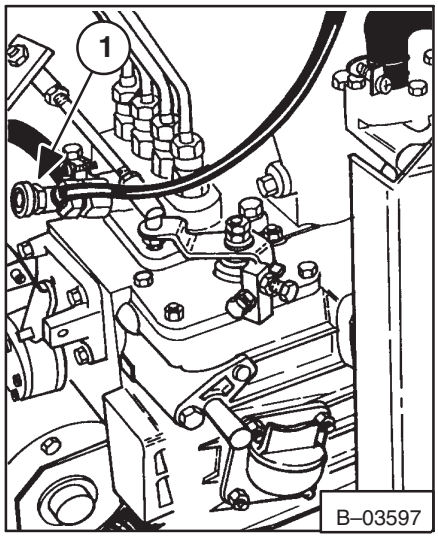

Fig. 1–24 Removing Air From Fuel System (643)

1–5 ENGINE COOLING SYSTEMS

(641)
The air cooled engine must have good air circulation to cool. Keep all shrouding installed except when cleaning the engine cooling fins.

Keep the rear door grill area free of debris and the shrouding free of leaks or dents. If the engine overheats an inspection of the cooling system must be made. Check for debris on the grill area and around the cylinder cooling fins. To clean the cooling fins, remove the blower housing cover (Fig. 1–25, Item 1). Use an air hose to remove debris from the cylinder head and blower fan (Fig. 1–25, Item 2).

(642, 643)
The cooling system has a coolant recovery tank. The location of the tank is on the right upright in the engine compartment (Fig. 1–26, Item 1). Remove the cap from the coolant recovery tank to check the coolant level. When the engine is cool, the coolant recovery tank must be 1/3 full. Add coolant to the coolant recovery tank when the coolant level is low.

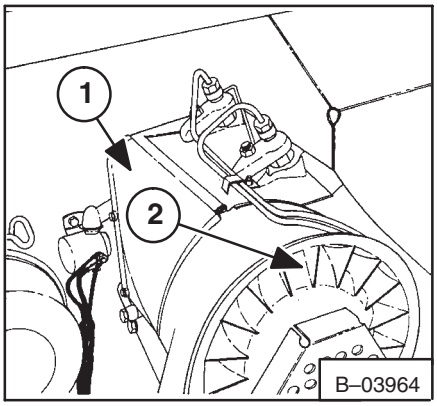

Fig. 1–25 Cleaning Cooling Fins (641)

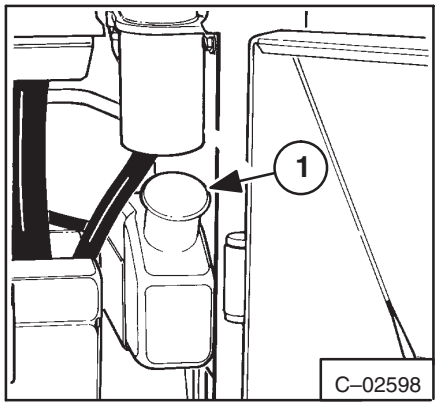

Fig. 1–26 Coolant Tank (642, 643)

1–5.1 Removing Coolant From The Cooling System

To remove coolant (642):

WARNING

Do not remove radiator cap when the engine is hot. You can be seriously burned.

W–2070–1285

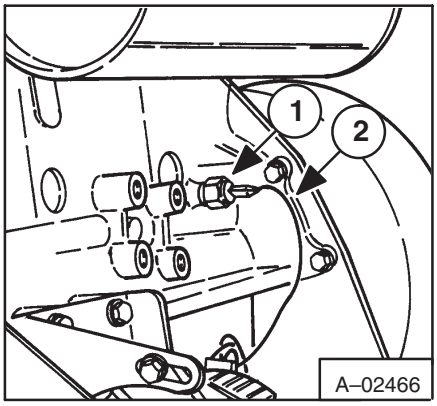

Fig. 1–27 Sender Switch (642)

1. Put a funnel under the temperature sender switch (Fig1–27, Item 1) to keep coolant from getting into the engine compartment.
2. Remove the grill (Fig. 1–28, Item 1).
3. Remove the radiator cap (Fig. 1–28, Item 2). The grill must be removed to do this.
4. Remove the wire (Fig. 1–27, Item 2) connected to the sender switch. Remove the sender switch (Fig. 1–27, Item 1).

To fill the cooling system (642):

1. Install the sender switch (Fig. 1–27, Item 1).
2. Connect the wire (Fig. 1–27, Item 2) to the sender switch.
3. Premix 50% water and 50% anti–freeze in a separate container (See Paragraph 8B–1.8, Page 8B–2 for capacity).
4. Fill the radiator with the mixed coolant and install the radiator cap.
5. Install the grill (Fig. 1–28, Item 1).
6. Fill the coolant recovery tank 1/3 full.

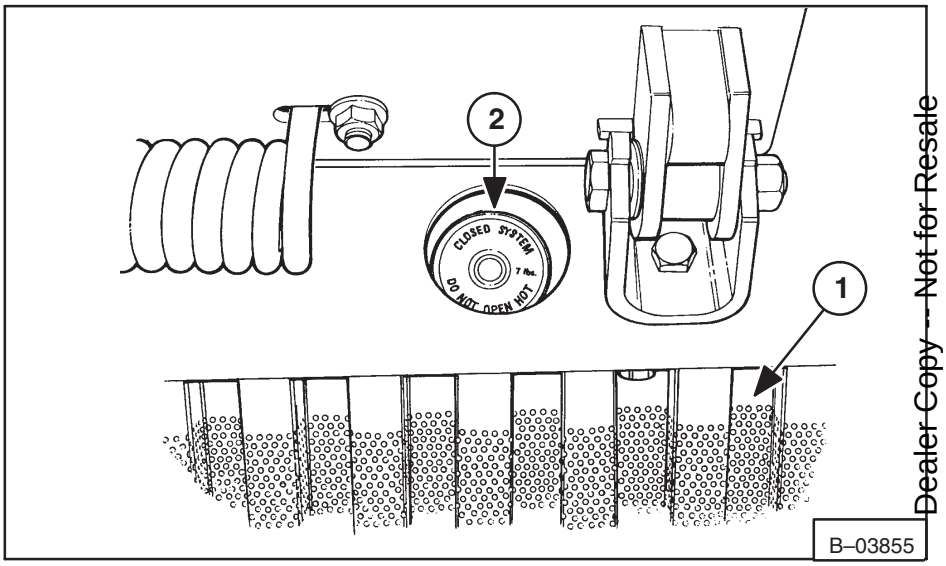

Fig. 1–28 Grill And Radiator Cap

NOTE: Protect the cooling system from freezing temperatures and overheating by adding premixed 50/50 ethylene glycol and water to the system.

To remove coolant from the cooling system (643):

WARNING

Do not remove radiator cap when the engine is hot. You can be seriously burned.

W–2070–1285

The valve to remove the coolant is on the left side of the engine block (Fig. 1–29).

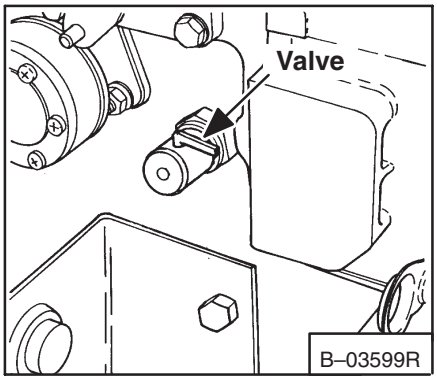

Fig. 1–29 Valve For Removing Coolant (643)

Revised Dec. 83

1. Connect a hose to the valve or use a funnel to keep coolant from getting into the engine compartment.
2. Remove the grill (Fig. 1–28, Item 1).
3. Remove the radiator cap (Fig. 1–28, Item 2). The grill must be removed to do this.

Turn the valve so that the lever is toward the outlet of the valve.

To fill the cooling system (643):

1. Close the drain valve (Fig. 1–29).
2. Premix 50% water and 50% anti–freeze in separate container (See Paragraph 8C–1.7, Page 8C–2 for capacity).
3. Fill the radiator and install the radiator cap.
4. Install the grill (Fig. 1–28, Item 1).
5. Fill the coolant recovery tank 1/3 full.

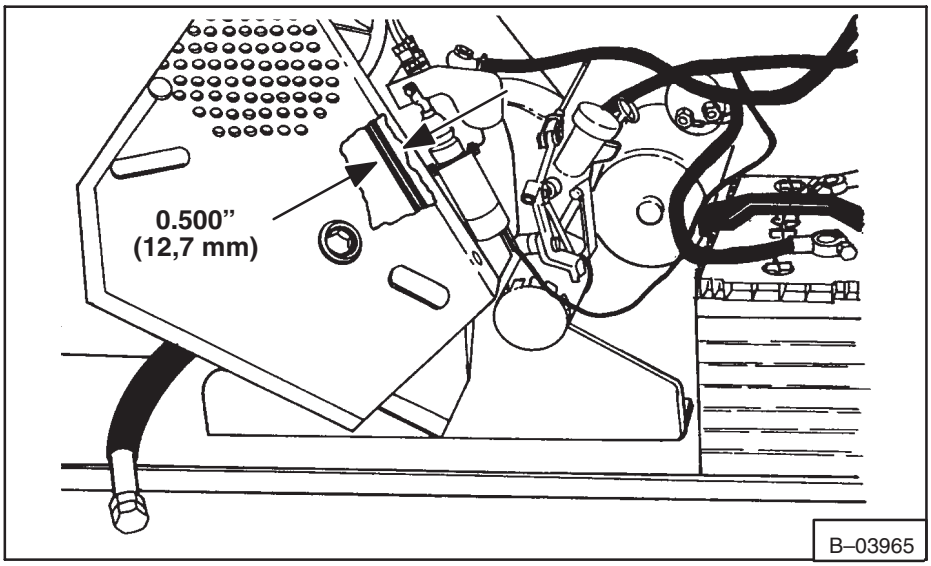

Fig. 1–30 Drive Belt Adjustment (641)

NOTE: Protect the cooling system from freezing temperatures and overheating by adding premixed 50/50 ethylene glycol and water to the system.

1–6 DRIVE BELTS

To adjust the belt tension:

(641)

1. Stop the engine.
2. Loosen the adjustment bolt and move the alternator to adjust tension at 0.500 inch (13 mm) (Fig. 1–30). Then tighten the adjustment bolt.

(642)

1. Stop the engine.
2. Remove the belt shield (Fig. 1–31).
3. Loosen the bolts for adjustment of the governor (Fig. 1–32, Item 1). Use a bar and adjust belt tension to 0.500 inch (13 mm) movement at the middle of the belt with 20 lbs. (9,07 kg) pressure (Fig. 1–32). Tighten the bolts.
4. Loosen the bolts for alternator adjustment (Fig. 1–32, Items 2 & 3). Move the alternator until the belt has 0.250 inch of movement at the middle of the belt with 20 lbs. (9,07 kg) pressure. Tighten bolts.
5. Install the belt shield.

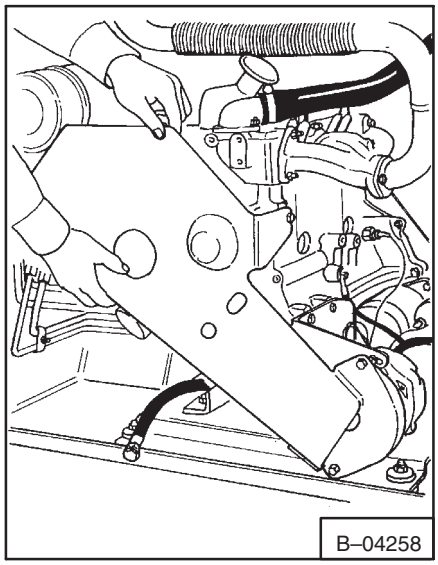

Fig. 1–31 Removing Belt Shield (642)

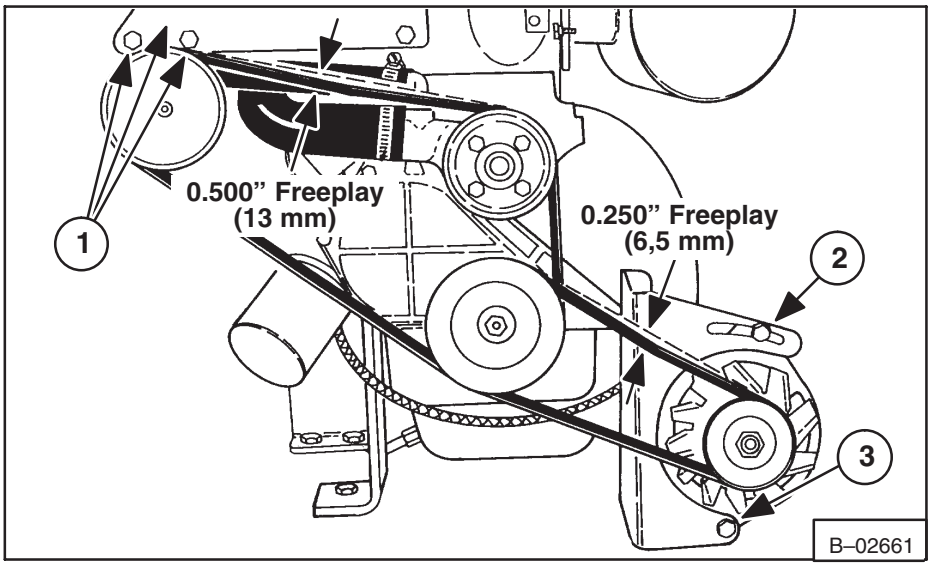

Fig. 1–32 Drive Belt Adjustment (642)

NOTE: When the governor has been moved, the rod to the throttle must be adjusted (See Paragraph 7B–2.4, Page 7B–3).

(643)

1. Stop the engine.
2. Loosen the adjustment bolt and move the alternator to adjust tension at 0.3125 inch (8 mm). Then tighten the adjustment bolt.

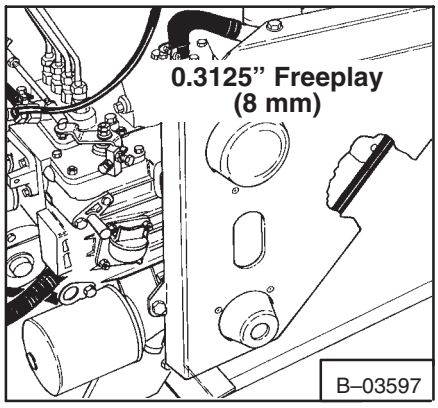

Fig. 1–33 Adjusting Drive Belt (643)

1–7 ELECTRICAL SYSTEM SERVICE (See Section 6 (Electrical System) for more information.)

1. Battery cables must be clean and tight. Remove any acid or corrosion from the battery and cables with a baking soda and water solution (Fig. 1–34). Cover the terminals with Clark Battery Saver to prevent corrosion. Install the covers on the terminals.
2. Two 25 ampere fuses are installed in the dash panel. If the fuses become damaged, replace them with the same type and size fuses.

1–7.1 Using An Extra Battery

If it is necessary to use an extra battery to start the engine. BE CAREFUL! This is a two person operation. There must be one person in the operator's seat and one person to connect and disconnect the battery cables.

WARNING

Keep arcs, sparks, flames and lighted tobacco away from batteries. When *jumping* from booster battery make final connection (negative) at engine frame.

Do not jump start or charge a frozen or damaged battery. Warm battery to 60 °F. (16°C.) before connecting to a charger. Unplug charger before connecting or disconnecting cables to battery. Never lean over battery while boosting, testing or charging.

Battery gas can explode and cause serious injury.

W–2066–1296

WARNING

Batteries contain acid which burns eyes and skin on contact. Wear goggles, protective clothing and rubber gloves to keep acid off body.

In case of acid contact, wash immediately with water. In case of eye contact get prompt medical attention and wash eye with clean, cool water for at least 15 minutes.

If electrolyte is taken internally drink large quantities of water or milk! DO NOT induce vomiting. Get prompt medical attention.

W–2065–1296

1. The ignition must be in the off position.
2. Use an extra battery of the same voltage as the loader battery.
3. Battery terminals have identification marks. The positive terminal is marked (+) and the negative terminal is marked (–).
4. The negative terminal (–) of the battery must be connected to the engine.

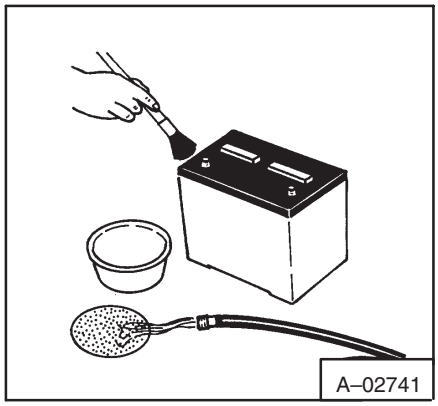

Fig. 1–34 Cleaning Battery Posts

⚠ WARNING

Keep arcs, sparks, flames and lighted tobacco away from batteries. When *jumping* from booster battery make final connection (negative) at engine frame.

Do not jump start or charge a frozen or damaged battery. Warm battery to 60 °F. (16°C.) before connecting to a charger. Unplug charger before connecting or disconnecting cables to battery. Never lean over battery while boosting, testing or charging.

Battery gas can explode and cause serious injury.

W–2066–1296

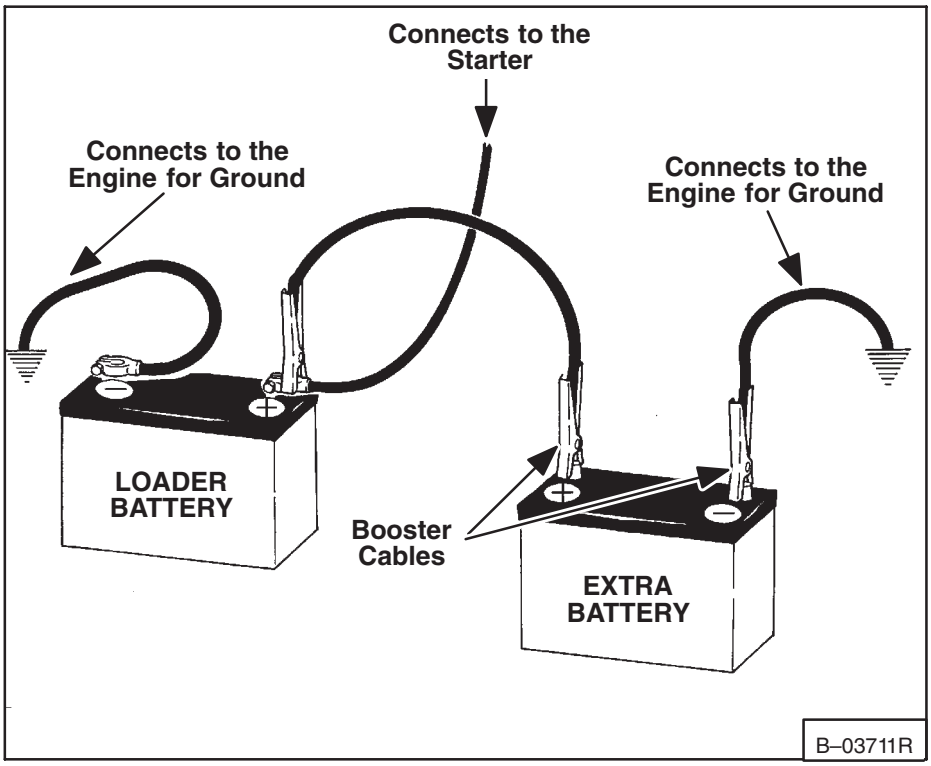

Fig. 1–35 Connecting Booster Cables

5. Connect the end of the first cable to the positive terminal (+) of the booster battery. Connect the other end of the same cable to the positive terminal (+) of the loader battery (Fig. 1–35).
6. Connect the end of the second cable to the negative terminal (–) of the booster battery . Connect the other end of the second cable to the engine. DO NOT connect the cable directly to the negative terminal (–) of the loader battery Connecting the cable directly to the negative terminal (–) of the loader battery can cause a spark and destroy the battery and cause personal injury.
7. Keep the cables away from the fans and belts.

NOTE: The operator must be in the operator's seat and have the seat belt fastened.

8. Start the engine.
9. After the engine has started, remove the cable connected to the engine.
10. Then remove the cable from the loader battery post positive terminal (+).

IMPORTANT

Damage to the alternator can occur if:

- **Engine is operated with battery cables disconnected.**
- **Battery cables are connected when using a fast charger or when welding on the loader . (Remove both cables from the battery.)**
- **Extra battery cables (booster cables) are connected wrong.**

I–2023–1285

1–7.2 Installing A New Battery

1. Remove the battery cables (Fig. 1–36). Remember the position of the positive terminal and the negative terminal so you can connect the cables correctly after the new battery is installed.

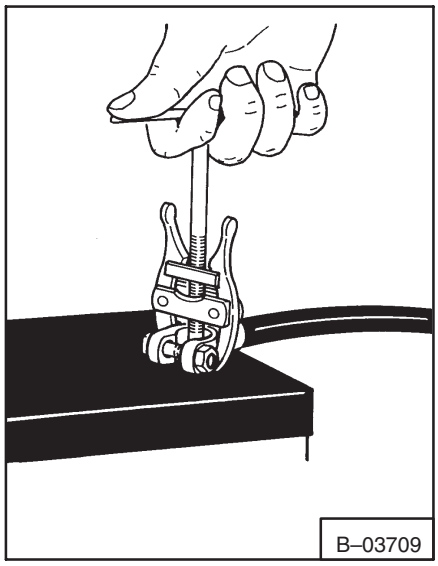

Fig. 1–36 Removing Cables

2. Remove the battery holddown clamp (Fig. 1–37, Item 1). Remove the battery from the engine compartment.

3. Clean the terminal posts (Fig. 1–38) of the new battery in the engine compartment. Install the holddown clamp.

NOTE: DO NOT touch any metal with the battery terminals.

4. Install and tighten the battery cables. Connect the ground (negative) cable last to prevent sparks.

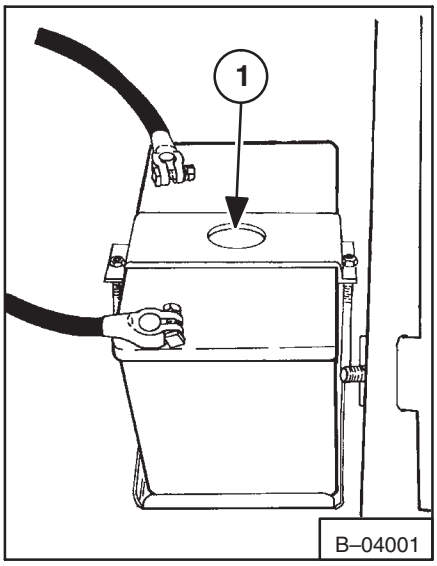

Fig. 1–37 Battery Holddown Clamp

1–8 HYDRAULIC/HYDROSTATIC SYSTEM (For more information see sections 2 and 3).

The hydraulic and hydrostatic systems use the same hydraulic oil reservoir.

The system has an engine driven vane pump that supplies hydraulic oil to the control valve and the lift and tilt cylinders.

Oil also goes from the control valve to the hydrostatic transmission pumps to provide charge pressure and cooling.

A 10 micron filter is installed on the right side of the engine compartment (Fig. 1–39, Item 1). This filter is used to clean the oil for the hydrostatic transmission.

The location of the oil cooler is above the engine. The oil cooler is used for cooling the hydraulic oil before it returns to the vane pump.

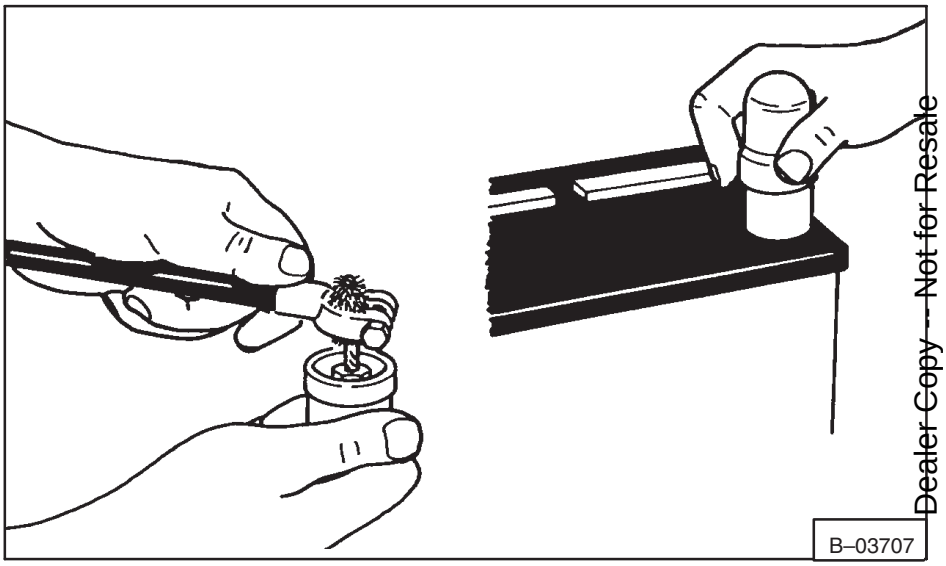

Fig. 1–38 Cleaning Battery Terminals

1–8.1 HYDRAULIC/HYDROSTATIC OIL RESERVOIR

Use only recommended oil in the hydraulic system (Clark Bobcat fluid [P/N 6563328] or 10W–30, 10W–40 class SE motor oil [5W–30 at temperatures below 10°F. (–23°C.)])

1–8.2 Checking And Adding Oil

To check the oil level in the hydraulic reservoir:

1. Put the loader on a level surface.

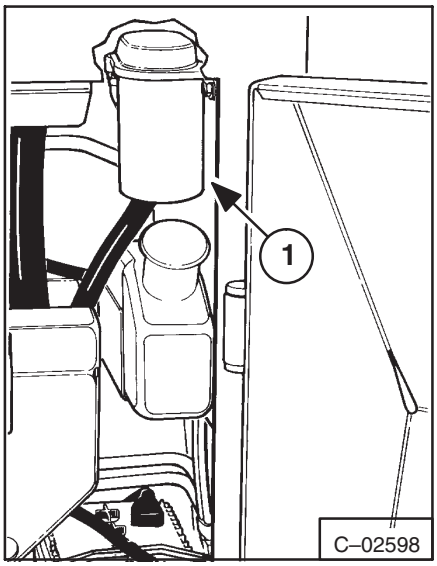

Fig. 1–39 10 Micron Filter

2. Open the bottom check valve on the side of the reservoir (Fig. 1–40, Item 1). The oil level is good if the oil flows. If no oil flows, close the valve and proceed with step 3.

3. Open the top check valve (Fig. 1–40, Item 2). Remove the fill cap from the reservoir (Fig. 1–40, Item 3). Add oil to the reservoir until oil flows at the top check valve. Close the valve and replace the fill cap.

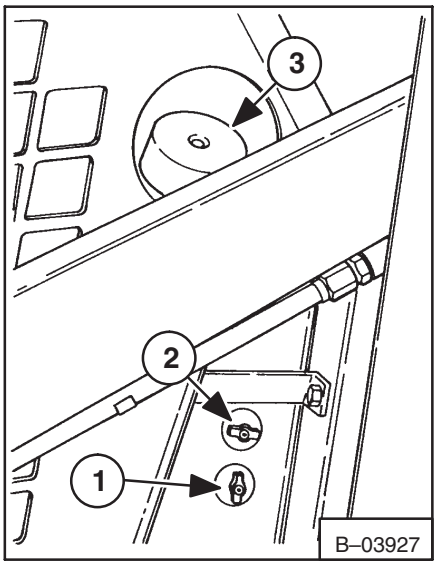

Fig. 1–40 Hydraulic Level Check

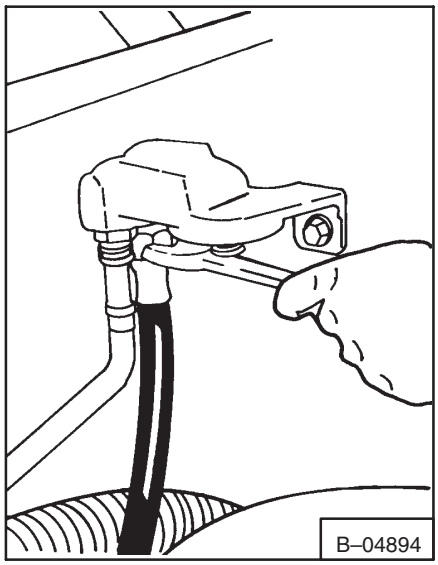

Fig. 1–41 Removing Hose (641)

1–8.3 Removing Hydraulic Oil

Remove the oil from the hydraulic reservoir and replace it with new oil every 1000 hours of operation. Also replace the oil after it has become dirty and after any major repairs.

1. Remove the hydraulic filter element. Remove the hose from the filter housing (641, Fig. 1–41) (642 & 643, Fig. 1–42). Let the oil flow into a container (Fig. 1–43).

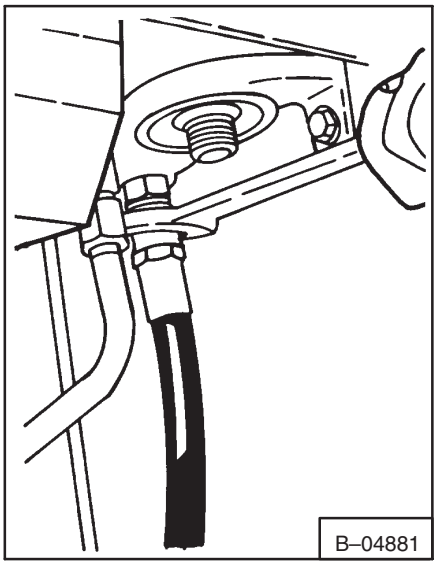

Fig. 1–42 Removing Hose (642 & 643)

Fig. 1–43 Draining Oil

2. Connect the hose to the filter housing when the reservoir is empty. Install a new filter element.

3. Remove the snap ring and remove the screen from the fill pipe (Fig. 1–44). Wash the screen in clean solvent and install it in the fill pipe.

4. Open the top check valve (Fig. 1–40, Item 2). Remove the fill cap from the reservoir (Fig. 1–40, Item 3). Add oil to the reservoir until the oil flows at the top check valve (Refer to Technical Data for type of oil to use). Close the check valve and replace the fill cap. DO NOT fill above the top check plug level.

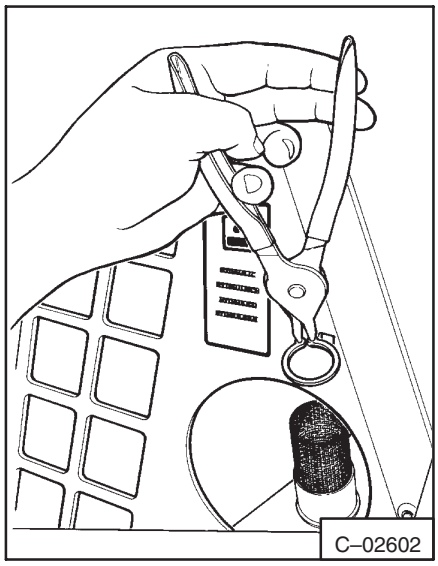

Fig. 1–44 Snap Ring

1–8.4 Replacement Of The Hydraulic Filter

Replace the hydraulic filter every 100 hours of operation.

To replace the hydraulic filter element:

1. Remove the filter element (Fig. 1–45, Item 1). Let the oil flow into the container.
2. Clean the surface of the filter head where the filter element makes contact with the filter head.
3. Lubricate the rubber gasket on the filter element with oil.
4. Install the filter element. Tighten the filter by hand only.
5. Check for leaks after you operate the Bobcat loader.

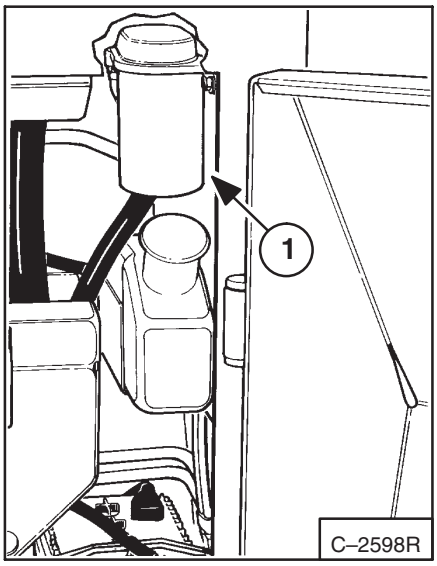

Fig. 1–45 Filter Element

1–9 FINAL DRIVE TRANSMISSION (CHAINCASE)

The chaincase contains the final drive sprocket and the chains. The chaincase is filled with the same type of oil as the hydraulic/hydrostatic system for chain lubrication. Refer to *TECHNICAL DATA* Section 8.

To check the chaincase oil level:

1. Put the Bobcat loader on a level surface.
2. Remove the plug at the front of the transmission housing (Fig. 1–46, Item 1).
3. Add oil through the check plug hole until the oil flows from the check plug hole. Install the plug.

See Paragraph 4–5.1, Page 4–13 to drain the chaincase.

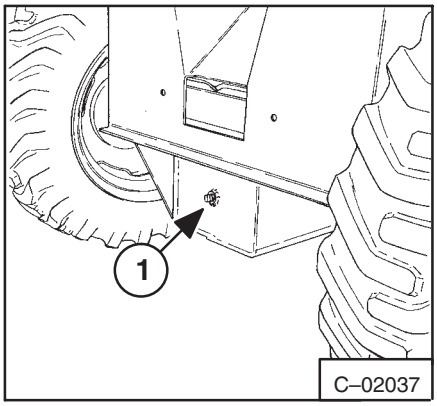

Fig. 1–46 Chaincase Plug

1–10 TIRE MAINTENANCE

Check the tires regularly for wear , damage and correct pressure. See *TECHNICAL DATA* Section 8.

Check for loose wheel nuts. Correct torque is 65 ft.–lbs. (88 Nm) torque.

1–10.1 Tire Rotation

When two tires become worn more than the other two tires put the two worn tires on the same side. The front tires must be moved to the rear and the rear tires to the front to keep the tire wear even (Fig. 1–47).

When new tires are installed, always keep the tires of the same size on the same side of the Bobcat loader.

NOTE: Both wheels, on each side of the Bobcat loader are connected together and are driven at the same speed, so the tires must be the same size.

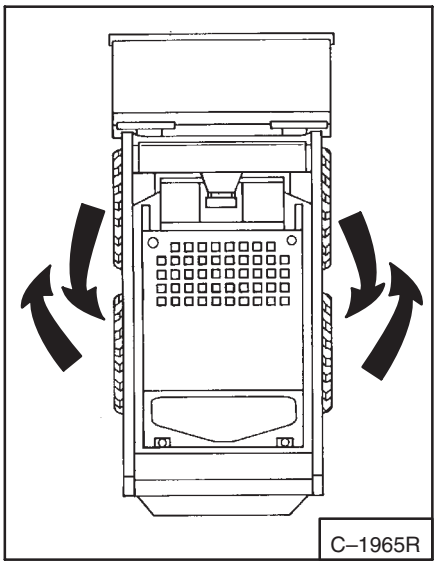

Fig. 1–47 Tire Rotation

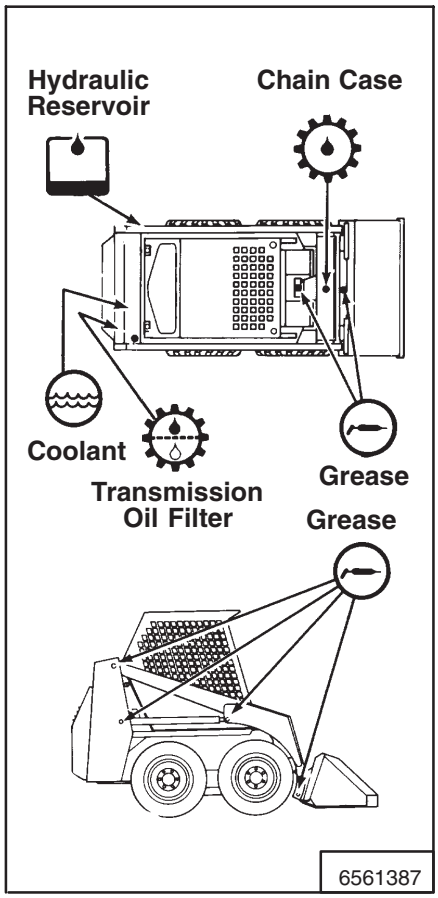

Fig. 1–48 Lubrication Points

WARNING

AVOID INJURY

Do not put fluid in the tires on this machine.

W–2029–1285

1–11 LUBRICATION OF THE BOBCAT LOADER

Lubricate the Bobcat loader as specified in the Service Schedule on page 1–3 for best performance of the Bobcat loader.

See figure 1–48 for the location of grease fittings.

Always use a good quality lithiumbased multi–purpose grease when you lubricate the Bobcat loader . Apply lubricant until the extra grease shows.

Grease the universal joints and spline (Fig. 1–49, Item 1) every 250 hours.

Lubricate the seat rails for easy movement when you adjust the seat (Fig. 1–50, Item 1).

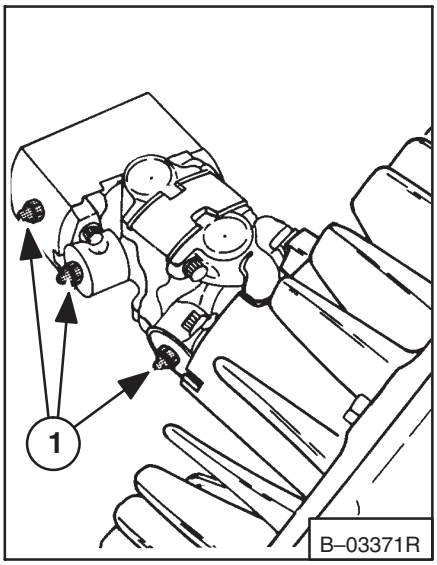

Fig.1–49 Grease Universal Joints

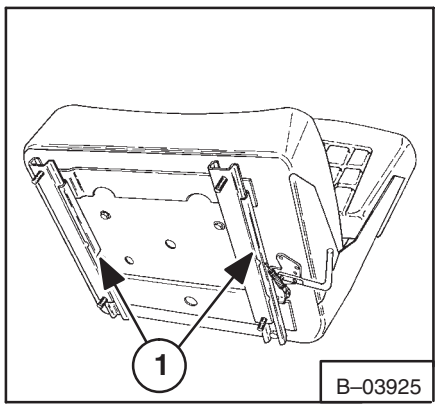

Fig. 1–50 Lubricating Seat

Add oil as needed to the steering control shaft (Fig. 1–51, Item 1). Add grease to steering pivot bearings (Item 2) every 250 hours.

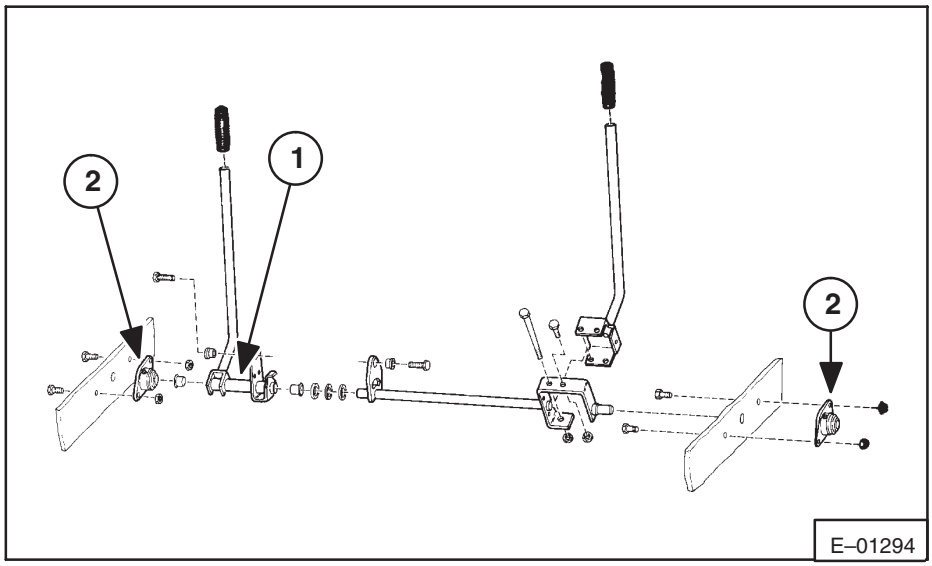

Fig. 1–51 Steering Control Lubrication

1–12 OPERATOR GUARD

The Bobcat loader has an operator guard as standard equipment. The operator guard protects the operator from rollover and falling objects.

WARNING

Never change the operator guard by welding, grinding, drilling holes or adding attachments that are not approved. This can weaken the operator guard and cause personal injury or death.

W–2217–1195

Check with your authorized dealer if the operator guard has been damaged.

Make sure the operator guard fastening bolts and nuts are tight (Fig. 1–52).

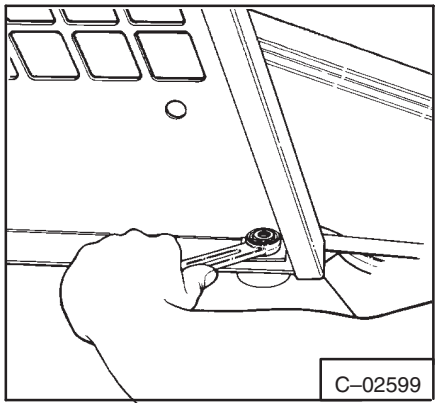

Fig. 1–52 Tightening Operator Guard Bolts

1–13 BOB–TACH

Check the Bob–Tach for wear or damage.

Check for free movement of wedges and Bob–Tach levers.

When the Bob–Tach levers (Fig. 1–53, Item 1) are pushed down into the locked position, the wedges must extend far enough to engage into the holes of the attachment (Fig. 1–54).

Replace wedges that are bent or broken.

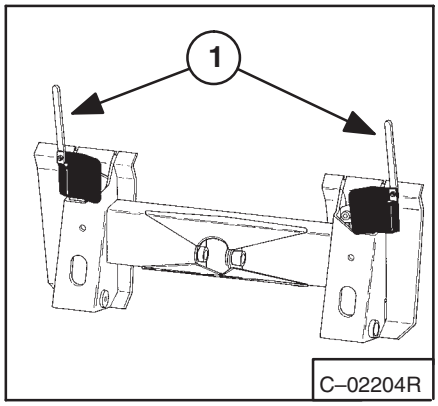

Fig. 1–53 Bob–Tach

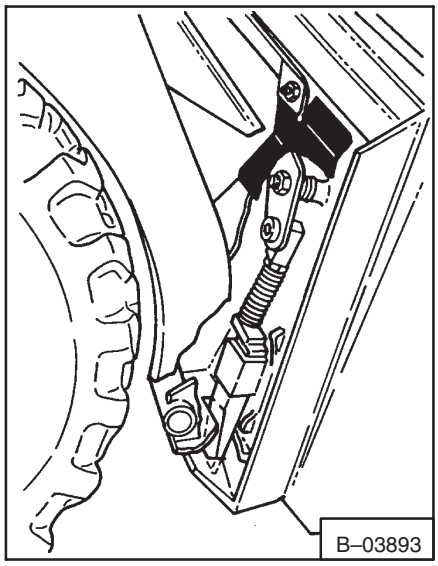

Fig. 1–54 Wedges

1–14 PIVOT PINS

All pivot points, lift arms, Bob–Tach and cylinders have large pins that are held in position with lockbolts (Fig. 1–55, Item 1). Check that the lockbolts are tightened to 8–10 ft.–lbs. (1 1–13 Nm) torque. Do not overtighten.

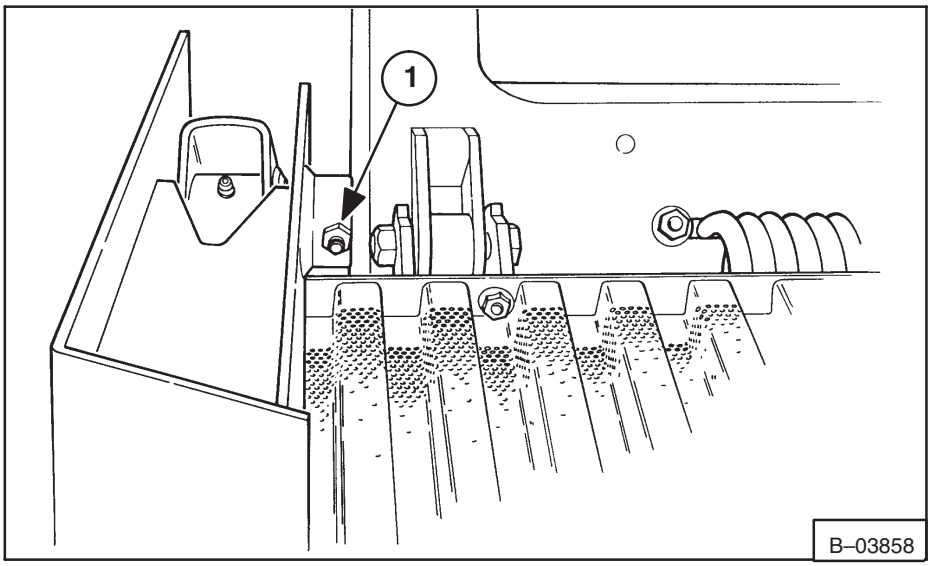

Fig. 1–55 Pivot Pin Lockbolts

1–15 AUXILIARY CONTROL LOCKBOLT

The auxiliary control has a lockbolt (Fig. 1–56, Item 1) that must be removed before you can use the auxiliary hydraulics (Fig. 1–57). The operator guard must be lifted before removing the lockbolt.

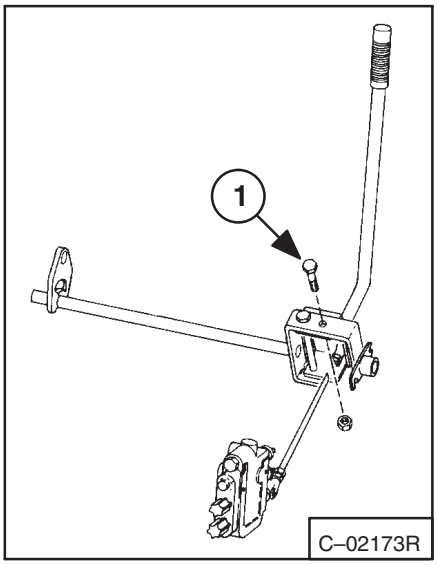

Fig. 1–56 Auxiliary Lockbolt

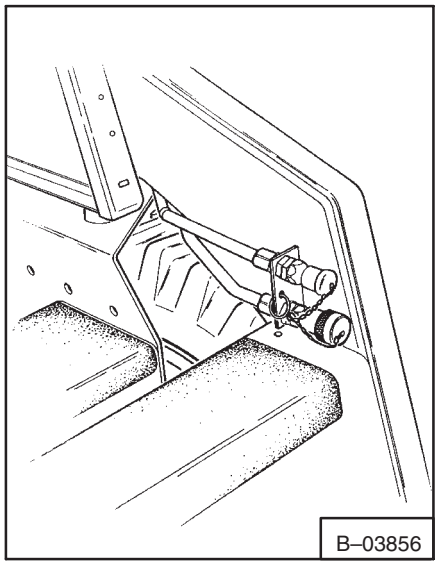

Fig. 1–57 Auxiliary Hydraulics

1–16 LIFT ARM STOP (Fig. 1–58)

1. Two persons are needed to install the lift arm stop. One person must be in the operator's seat, with the seat belt fastened, until the lift arm stop is installed.

2. Start the engine and raise the lift arms all the way up.

3. Have a second person install the lift arm stop over the rod end of one lift cylinder.

NOTE: Make sure the lift arm stop is tight against the cylinder rod.

4. Lower the lift arms until the top is held between the lift arms and the lift cylinder.

5. Stop the engine.

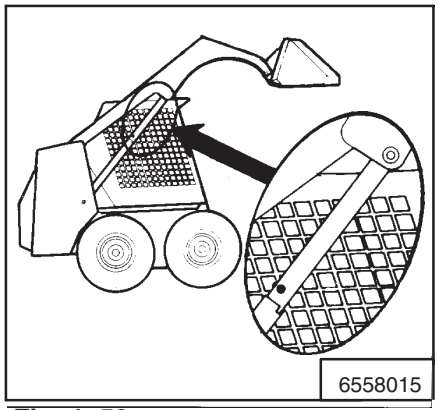

Fig. 1–58 Lift Arm Stop

SPARK ARRESTOR MUFFLER

The spark arrestor muf fler must be cleaned every 100 hours. W ear safety goggles.

WARNING

Stop engine and allow the muffler to cool before cleaning the spark chamber. Wear safety goggles. Failure to obey can cause serious injury.

W–2011–1285

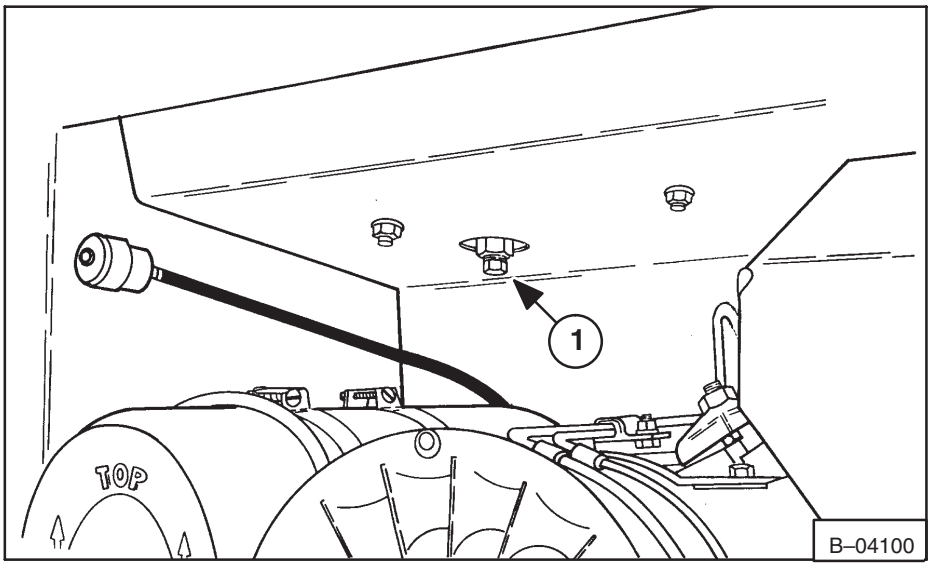

Fig. 1–59 Spark Arrestor Muffler (641)

1. Stop the engine.
2. Open the rear door.
3. Remove the plug at the bottom of the muffler (641, Fig. 1–59, Item 1) (642, Fig. 1–60, Item 1) (643, Fig. 1–61, Item 1).

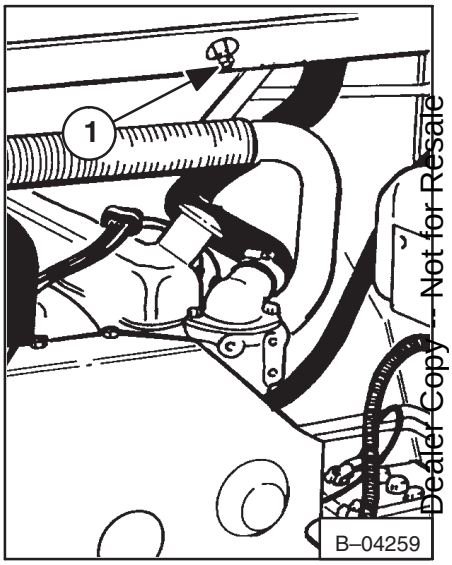

Fig. 1–60 Spark Arrestor Muffler (642)

WARNING

DO NOT run the engine in an area that has materials that can cause combustion. Wear safety goggles.

W–2309–0398

4. Hold a block of wood over the outlet of the muffler.
5. Start the engine and run it for about 10 seconds.
6. Stop the engine and install the plug.
7. Close the rear door.

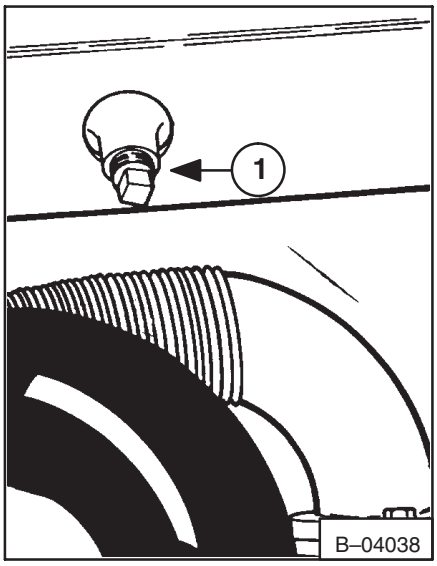

Fig. 1–61 Spark Arrestor Muffler (643)

HYDRAULIC SYSTEM

WARNING

Instructions are necessary before operating or servicing machine. Read Operation & Maintenance Manual, and signs (decals) on machine. Follow warnings and instructions in the manuals when making repairs, adjustments or servicing. Check for correct function after adjustments. repairs or service. Failure to follow instructions can cause injury or death.

W–2144–0189

bobcat®

SYSTEM OPERATIONS

bobcat

641, 642, 643 HYDRAULIC/HYDROSTATIC SYSTEM
(Closed Center System)
(Chart # E-1351)

The fluid flows by gravity from the reservoir 1 to the port block 7 which is on top of the hydraulic pump 3 . Return fluid from the cold weather by-pass valve 9 and the oil cooler 19 join with the reservoir fluid to supply fluid to the hydraulic pump 3 . "Case drain" fluid from the hydrostatic pumps 22 flows through the bearing of the hydrostatic pump 22 and also supplies fluid to the hydraulic pump 3 .

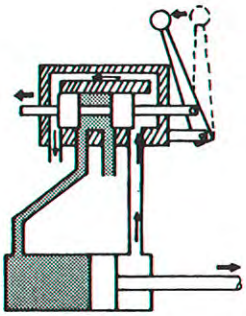

The hydraulic pump 3 is a "vane type" pump and is driven by a shaft through the hydrostatic pumps 22 . The fluid goes from the hydraulic pump 3 to the hydraulic control valve 16 .

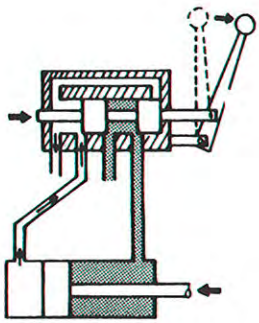

The hydraulic control valve 16 has a adjustable relief valve 14 . When all three spools are in the neutral position, the fluid goes through the control valve 16 and back to the port block 7 . If one of the spools is activated, the fluid goes out the respective port and to either the base end, or the rod end of the cylinder(s) 10 12 . As the fluid goes into one end of the cylinders(s) 10 12 , return fluid comes from the opposite end of the cylinder(s) and back into the control valve 16 . When the cylinder(s) reaches the end of the stroke, the fluid flow stops and causes hydraulic pressure to increase. When the pressure reaches the setting of the relief valve 14 it will open and let the fluid by-pass the hydraulic circuit (internally) and go back to the port block 7 .

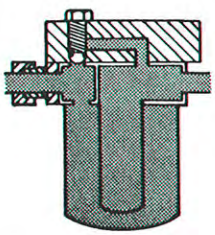

If you let the spool go back to the neutral position, then there is fluid available for the other sections. Two sections of the control valve 16 can be used at the same time if the main relief valve 14 is not open.

The fluid which goes back to the port block 7 goes through a 40 micron filter 4 . The normal flow of the fluid is through the 40 micron filter 4 and to the hydrostatic pumps 22 . But if the fluid is cold or there is a sudden increase of pressure from the control valve 16 the pressure will cause the cold weather by-pass valve 9 to open and let the excess fluid go back to the reservoir 1 until the excess pressure decreases.

Charts# E-1352, E-1353

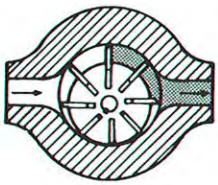

From the 40 micron filter 4 the fluid flows pass the temperature switch (Early Model) 5 or the pressure switch (Late Model) 5 . The fluid flows from the port block 7 to the center section of the hydrostatic pumps 19 . This fluid is called "charge supply fluid". In the center section of the hydrostatic pumps 19 the fluid is against two high pressure replenishing relief valves 17 , two replenishing valves and the non-functional charge relief valve 18 . The charge relief valve 18 has a heavy spring holding it shut and it is non-functional. When the fluid gets to the hydrostatic pumps 19 it activates the high pressure replenishing valves 17 . The replenishing valves open and let fluid into the hydrostatic pumps 19 for replenishing, lubrication and cooling.

The hydrostatic pumps 19 do not need the full volume of fluid flow, so there is extra fluid. This extra fluid goes to the charge by-pass valve 8 . When the pressure reaches the setting of the charge by-pass valve 8 it opens and lets this extra fluid go to the oil cooler 14 .

There are two hydrostatic pumps 19 and two hydrostatic motors 2 . One pump and one motor work together as a pair to drive on one side of the loader. The other pump and motor work as a pair to drive the opposite side of the loader.

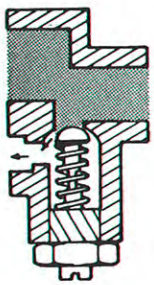

When the replenishing valves 17 open and fluid goes into the hydrostatic pumps 19 , the flow of fluid becomes the "drive loop fluid". When the steering levers are in neutral, the hydrostatic pumps 19 and the hydrostatic motors 2 are not working but do have charge pressure. When the steering levers are moved, the swashplates in the hydrostatic pumps 19 are angled and the fluid is

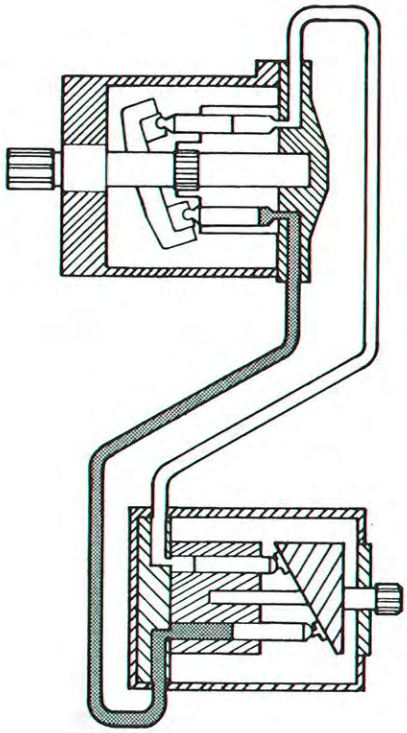

forced out of the pressure side of the hydrostatic pumps 19 and to the hydrostatic motors 2 . This flow of fluid is called "drive pressure". Drive pressure is much higher than charge pressure causing the replenishing valves 17 to close, allowing the flow of the fluid to go to the hydrostatic motors 2 . There are four replenishing valves 17 , two for each hydrostatic pump 19 . One is for forward travel and one for reverse travel. When the loader is driven with the bucket down, into a pile of dirt, there is resistance causing high pressure fluid in the drive loop. There is a relief valve built into two of the high pressure replenishing relief valves 17 (for forward travel). This relief valve releases the high pressure fluid in the drive loop. When the relief valve opens, the extra fluid goes from the drive loop to the charge loop to be used again. If the fluid pressure gets above the relief valve setting in the drive loop. The pressure can break tubelines, damage the hydrostatic pumps 19 or the hydrostatic motors 2 . The two replenishing valves for reverse travel do not have the high pressure relief function.

The hydrostatic motors 2 are a "roller-geroler type" and have a built-in shuttle valve that meters fluid through the "tee" block past the pressure switch (Early Model) 15 or the temperature switch (Late Model) 15 and to the oil cooler 14 . The fluid flows from the oil cooler 14 through the hydraulic filter 12 and to the inlet of the port block 7 on top of the hydraulic pump 3 . The shuttle valve in the hydrostatic motors 2 opens to let fluid flow through the oil cooler 14 so that the drive loop fluid does not get to hot.

The hydraulic filter 12 has a by-pass valve 13 to allow fluid flow when the fluid will not go through the filter element (plugged).

The cold weather by-pass valve 9 will open when the lift arms are lowered quickly with a heavy load in the bucket. This happens because a large amount of fluid is pushed out of the lift cylinders through the control valve 10 and into the port block 7 . The cold weather by-pass valve 9 will also open when the fluid is cold and is too thick for the flow to go through the 40 micron filter 4 .

HYDRAULIC/HYDROSTATIC FLOW CHART (P/N 6566853)

641 (S/N 13208 & Below), 642 (S/N 13523 & Below), 643 (S/N 13405 & Below)

(Printed February 1984)

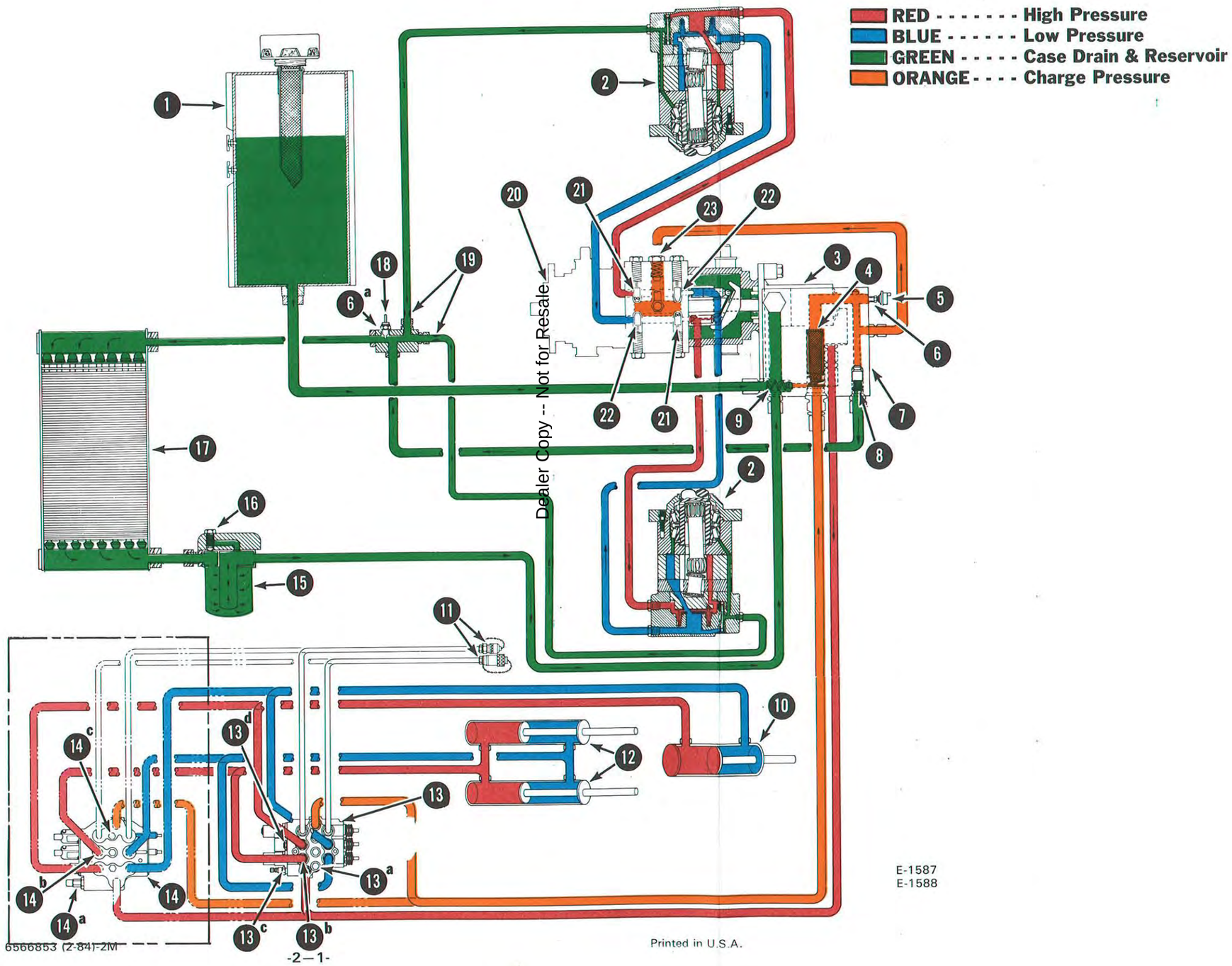

LEGEND

1. RESERVOIR, Capacity: 3.5 Gal. (13,2 L) System Capacity: 6.0 Gal. (22,7 L)
2. HYDROSTATIC MOTOR
3. HYDRAULIC PUMP (Vane), 10.8 GPM (40,8 L/min.) @ 2600 RPM
4. FILTER, 40 micron, Bronze
5. TEMPERATURE SWITCH, (S/N 12999 & Below) 225-232°F (107-111°C)

   PRESSURE SWITCH, (S/N 13001 & Above) 17-20 PSI (118-144 kPa)
6. PRESSURE RESTRICTOR, (S/N 13001 & Above)

6a. PRESSURE RESTRICTOR, (S/N 12999 & Below)

7. PORT BLOCK
8. CHARGE BY-PASS VALVE, 43-57 PSI (296-393 kPa)
9. COLD WEATHER BY-PASS VALVE, 200-224 PSI (1379-1544 kPa)
10. TILT CYLINDER
11. AUXILIARY QUICK COUPLERS
12. LIFT CYLINDER
13. HYDRAULIC CONTROL VALVE (MELROE) 641 (S/N 13001-13208, 642 (S/N 13001-13523), 643 (S/N 13001-13504)

13a. LOAD CHECK VALVES (Three)

13b. RESTRICTOR, 0.125" (3,175 mm) Diameter

13c. MAIN RELIEF VALVE, 1800-1950 PSI (12411-13445 kPa) Measured at Quick Couplers

13d. ANTI-CAVITATION VALVE

HYDRAULIC CONTROL VALVE (VICTOR), 641, 642, 643 (S/N 12999 & Below)

14a. MAIN RELIEF VALVE, 1800-1950 PSI (12411-13445 kPa) Measured at Quick Couplers

14b. RESTRICTOR, 0.125" (3,175 mm) Diameter

14c. LOAD CHECK VALVES (Three)

15. FILTER, 10 Micron Element
16. FILTER BY-PASS, 72 PSI (496 kPa)
17. OIL COOLER
18. PRESSURE SWITCH (S/N 12999 & Below) 2.5-3.5 PSI (17-24 kPa)

    TEMPERATURE SWITCH (S/N 13001 & Above) 225°-232°F (107-111°C)
19. ORIFICE, 0.156" (3,962 mm) Diameter
20. HYDROSTATIC PUMPS
21. HIGH PRESSURE RELIEF VALVES, 3000 PSI (20685 kPa)
22. REPLENISHING VALVES
23. CHARGE RELIEF VALVE, (Non-Functional)

HYDRAULIC/HYDROSTATIC SYSTEM EXPLANATION
641 (S/N 13208 & Below)
642 (S/N 13523 & Below)
643 (S/N 13405 & Below)
(Printed February 1984)

The fluid flows by gravity from the reservoir 1 to the port block 7 which is on top of the hydraulic pump 3 . Return fluid from the cold weather by-pass valve 9 and the oil cooler 17 join with the reservoir fluid to supply fluid to the hydraulic pump 3 . "Case drain" fluid from the hydrostatic pumps 20 flows through the bearing of the hydrostatic pump 20 and also supplies fluid to the hydraulic pump 3 .

The hydraulic pump 3 is a "vane type" pump and is driven by a shaft through the hydrostatic pumps 20 . The fluid goes from the hydraulic pump 3 to the hydraulic control valve 13 or 14 .

The hydraulic control valve 13 or 14 has a adjustable relief valve 13[c] or 14[a]. When all three spools are in the neutral position, the fluid goes through the control valve 13 or 14 and back to the port block 7 . If one of the spools is activated, the fluid goes out the respective port and to either the base end, or the rod end of the cylinder(s) 10 12 . As the fluid goes into one end of the cylinder(s) 10 12 , return fluid comes from the opposite end of the cylinder(s) and back into the control valve 13 or 14 . When the cylinder(s) reaches the end of the stroke, the fluid flow stops and causes hydraulic pressure to increase. When the pressure reaches the setting of the relief valve 13[c] or 14[a] it will open and let the fluid by-pass the hydraulic circuit (internally) and go back to the port block 7 .

If you let the spool go back to the neutral position, then there is fluid available for the other sections. Two sections of the control valve 13 or 14 can be used at the same time if the main relief valve 13[c] or 14[a] is not open.

The fluid which goes back to the port block 7 goes through a 40 micron filter 4 . The normal flow of the fluid is through the 40 micron filter 4 and to

the hydrostatic pumps 20 . But if the fluid is cold or there is a sudden increase of pressure from the control valve 13 or 14 , the pressure will cause the cold weather by-pass valve 9 to open and let the excess fluid go back to the reservoir 1 until the excess pressure decreases.

From the 40 micron filter 4 the fluid flows past the temperature switch (Early Model) 5 or the pressure switch (Late Model) 5 . The fluid flows from the port block 7 to the center section of the hydrostatic pumps 20 . This fluid is called ''charge supply fluid''. In the center section of the hydrostatic pumps 20 the fluid is against two high pressure replenishing relief valves 21 , two replenishing valves 22 and the non-functional charge relief valve 23 . The charge relief valve 23 has a heavy spring holding it closed and it is non-functional. When the fluid gets to the hydrostatic pumps 20 it activates the high pressure replenishing valves 21 . The replenishing valves open and let fluid into the hydrostatic pumps 20 for replenishing, lubrication and cooling.

The hydrostatic pumps 20 do not need the full volume of fluid flow so there is extra fluid. This extra fluid goes to the charge by-pass valve 8 . When the pressure reaches the setting of the charge by-pass valve 8 it opens and lets this extra fluid go to the oil cooler 17 .

There are two hydrostatic pumps 20 and two hydrostatic motors 2 . One pump and one motor work together as a pair to drive on one side of the loader. The other pump and motor work as a pair to drive the opposite side of the loader.

When the replenishing valves 22 open and fluid goes into the hydrostatic pumps 20 , the flow of fluid becomes the ''drive loop fluid''. When the steering levers are in neutral, the hydrostatic pumps 20 and the hydrostatic motors 2 are not working but do have charge pressure. When the steering levers are moved, the swashplates in the hydrostatic pumps 20 are angled and the fluid is forced out of the pressure side of the hydrostatic pumps 20 and to the hydrostatic motors 2 . This flow of fluid is called ''drive pressure''. Drive pressure is much higher than charge pressure causing the replenishing valves 22 to close, allowing the flow of the fluid to go to the hydrostatic motors 2 . There are four replenishing valves 21 and 22 , two for each hydrostatic pump 20 . One is for forward travel and one for reverse travel. When the loader is driven with the bucket down, into

a pile of dirt, there is resistance causing high pressure fluid in the drive loop. There is a relief valve built into two of the high pressure replenishing relief valves 21 (for forward travel). This relief valve releases the high pressure fluid in the drive loop. When the relief valve opens, the extra fluid goes from the drive loop to the charge loop to be used again.

The hydrostatic motors 2 are a ''roller-geroler type'' and have a built-in shuttle valve that meters fluid through the ''tee'' block past the pressure switch (Early Model) 5 or the temperature switch (Late Model) 5 and to the oil cooler 17. The fluid flows from the oil cooler 17 through the hydraulic filter 15 and to the inlet of the port block 7 on top of the hydraulic pump 3. The shuttle valve in the hydrostatic motors 2 opens to let fluid flow through the oil cooler 17 so that the drive loop fluid does not get to hot.

The hydraulic filter 15 has a by-pass valve 16 to allow fluid flow when the fluid will not go through the filter element (plugged).

The cold weather by-pass valve 9 will open when the lift arms are lowered quickly with a heavy load in the bucket. This happens because a large amount of fluid is pushed out of the lift cylinders through the control valve 13 or 14 and into the port block 7. The cold weather by-pass valve 9 will also open when the fluid is cold and is too thick for the flow to go through the 40 micron filter 4.

HYDRAULIC / HYDROSTATIC FLOW CHART

For Model

641 (Starting With S/N 13209)
642 (Starting With S/N 13524)
642B (Starting With S/N 25000)
643 (Starting With S/N 13406)

Chart # 6570266 (Printed April 1989)

RED - - - - - - - - High Pressure
BLUE - - - - - - - Low Pressure
GREEN - - - - - - Case Drain & Reservoir
ORANGE - - - - - Charge Pressure

NOTE
Chart shows oil flow in Forward Drive Position and with Hydraulic Cylinders Partially Extended. For Hydraulic/ Hydrostatic System Operation, refer to Sheet 2 of this publication.

NOTE
Refer to Chart #6570287 for machines equipped with optional Bucket Positioning Valve. Reference "A" and "B" indicate location of hydraulic circuitry connection.

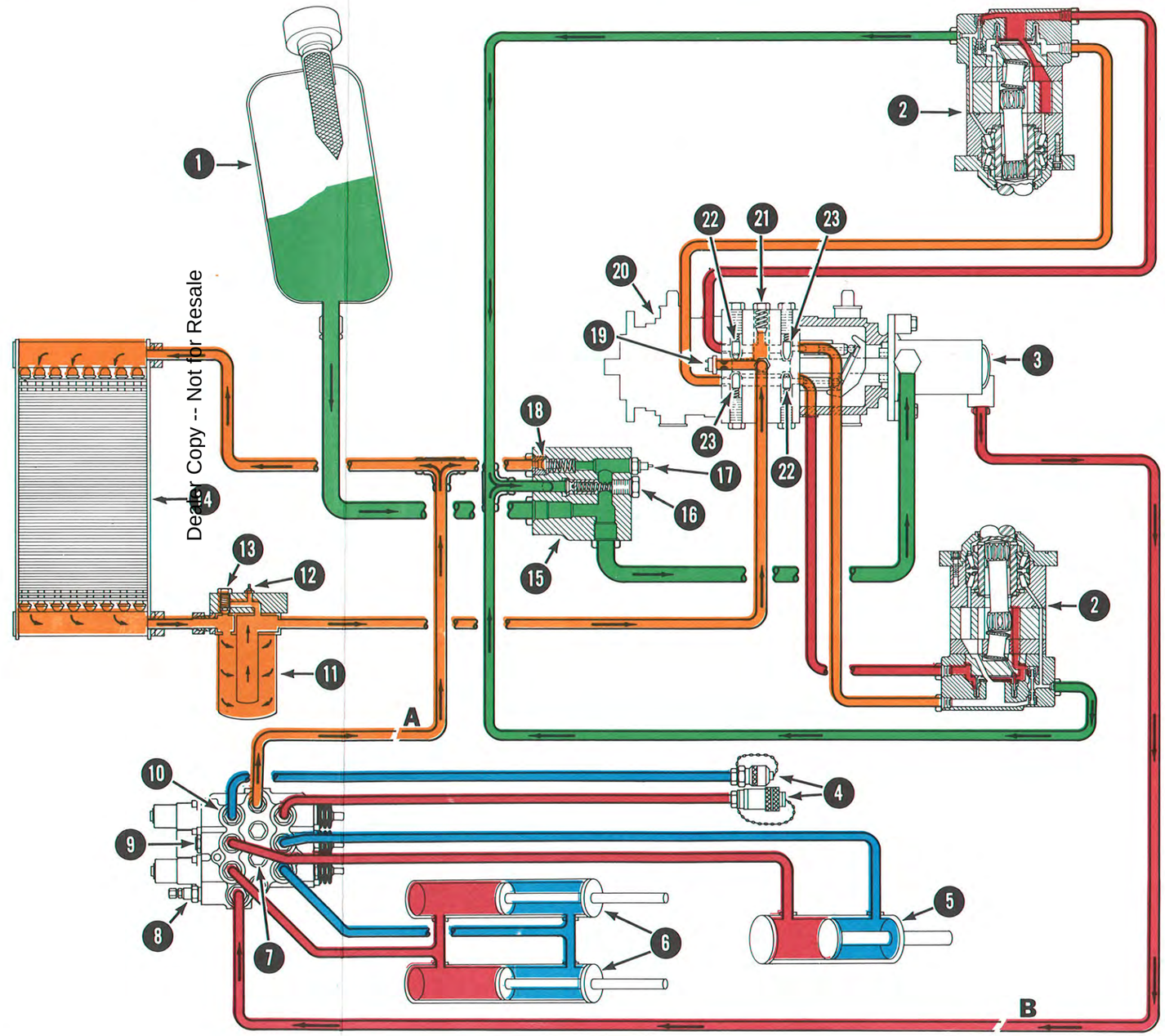

E-1510

Printed in U.S.A.

bobcat

HYDRAULIC / HYDROSTATIC SYSTEM OPERATION

To Be Used With

HYDRAULIC / HYDROSTATIC FLOW CHART

For Model

641 (Starting With S/N 13209)
642 (Starting With S/N 13524)
642B (Starting With S/N 25000)
643 (Starting With S/N 13406)

Chart # 6570266 (Printed April 89)

CHART LEGEND

1. **FLUID RESERVOIR,**
   Cap: . . . . . 3.5 Gals. (13,2 L)
2. **HYDROSTATIC MOTOR**
3. **HYDRAULIC PUMP,** Vane Type
   10.8 GPM (40,8 Lmin.) @ 2600 RPM
4. **AUXILIARY QUICK COUPLERS (Opt. on 642B)**
5. **TILT CYLINDER**
6. **LIFT CYLINDERS**
7. **LOAD CHECK VALVES (3)**
8. **MAIN RELIEF VALVE,** 1800-1950 PSI (12311-13445 kPa)
9. **ANTI-CAVITATION VALVE**
10. **HYDRAULIC CONTROL VALVE**
11. **HYDRAULIC/HYDROSTATIC FILTER,** #3 Element
12. **HYDRAULIC/HYDROSTATIC FILTER SWITCH**
    19 PSI (131 kPa) (641-S/N 20165 & Below)
    (642-S/N 20480 & Below)
    (643-S/N 20524 & Below)
    40 PSI (310 kPa) (641-S/N 20166 & Above)
    (642-S/N 20481 & Above)
    (643-S/N 20525 & Above)
13. **FILTER BY-PASS VALVE,**
    25 PSI (172 kPa) (641-S/N 20165 & Below)
    (642-S/N 20480 & Below)
    (643-S/N 20524 & Below)
    50 PSI (345 kPa) (641-S/N 20166 & Above)
    (642-S/N 20481 & Above)
    (643-S/N 20525 & Above)
14. **OIL COOLER**
15. **PORT BLOCK**
16. **CASE DRAIN RELIEF VALVE,** 45-55 PSI (310-379 kPa)
17. **TEMPERATURE SWITCH,** 225-232°F (106-112°C)
18. **COLD OIL BY-PASS VALVE,** 177-227 PSI (1220-1565 kPa)
19. **CHARGE PRESSURE SWITCH,** 17-23 PSI (117-159 kPa)
20. **HYDROSTATIC PUMP**
21. **CHARGE RELIEF VALVE,** 85 PSI (586 kPa)
22. **HIGH PRESSURE RELIEF REPLENISHING VALVE,** 3000 PSI (20685 kPa)
23. **REPLENISHING VALVES**

NOTE: "A" and "B" - Bucket Positioning Hydraulic Circuitry Connection.

OIL FLOW EXPLANATION

The fluid flows by gravity from the reservoir 1 to the port block 15 which is on the inside of the right fender. Return fluid from the by-pass valve 18 and the oil cooler 14 joins with the fluid from the hydrostatic pump 20 through the bearing of the pump 20 and also supplies fluid to the hydraulic pump 3 .

The hydraulic pump 3 is a "vane type" pump and is driven by a shaft through the hydrostatic pumps 20 . The fluid goes from the hydraulic pump 3 to the hydraulic control valve 10 .

The hydraulic control valve 10 has an adjustable relief valve 8 . When all the spools of the control valve are in the neutral position, the fluid goes through the control valve 10 and to the oil cooler 14 . If one of the spools is activated, the fluid goes out the respective port and to either the base end, or the rod end of the cylinder(s) 5 6 . As the fluid goes into one end of the cylinder(s) the fluid from the other side of the cylinder flows back into the control valve 10 . When the cylinder(s) reaches the end of the stroke, the fluid reaches the setting of the relief valve 8 , it will open and let the fluid by-pass the hydraulic circuit (internally) and go back to the oil cooler 14 .

If you let the spool go back to the neutral position, then there is fluid available for the other sections of the control valve 10 . Two sections of the control valve 10 can be used at the same time if the main relief valve 8 is not open.

The fluid flows from the oil cooler 14 through the #3 element filter 11 to the center section of the hydrostatic pumps 20 . This fluid is called "charge supply fluid". In the center section of the hydrostatic pumps 20 the fluid is against two high pressure relief replenishing valves 22 , two replenishing valves 23 and the charge relief valve 21 . When the fluid gets to the hydrostatic pumps 20 it activates the high pressure relief replenishing valves 22 . The replenishing valves open and let fluid into the hydrostatic pumps 20 for replenishing, lubrication and cooling.

The hydrostatic pumps 20 do not need the full volume of fluid flow so there is extra fluid. This extra fluid goes to the charge by-pass valve 21 .

There are two hydrostatic pumps 20 and two hydrostatic motors 2 . One pump and one motor work together as a pair to drive on one side of the loader. The other pump and motor work as a pair to drive the opposite side of the loader.

When the replenishing valves 23 open and fluid goes into the hydrostatic pumps 20 , the flow of fluid becomes the "drive loop fluid". When the steering levers are in neutral, the hydrostatic pumps 20 and the hydrostatic motors 2 are not working, but do have charge pressure. When the steering levers are moved, the swashplates in the pumps 20 are angled

and the fluid is forced out of the pressure side of the hydrostatic pumps 20 and to the hydrostatic motors 2 . This flow of fluid is called "drive pressure". Drive pressure is much higher than charge pressure causing the replenishing valves 22 or 23 to close, allowing the flow of the fluid to go to the motors 2 . There are four replenishing valves 22 and 23 , two for each hydrostatic pump 20 . One is for forward travel and one for reverse travel. When the loader is driven with the bucket down, into a pile of material, there is resistance causing high pressure fluid in the drive loop. There is a relief valve built into the high pressure replenishing relief valves 22 (for forward travel). This relief valve releases the high pressure fluid in the drive loop. When the relief valve opens, the extra fluid goes from the drive loop to the charge loop to be used again.

The hydrostatic motors 2 are a "roller-geroler type". The case drain fluid from the motors 2 is controlled by the case drain relief valve 16 in the port block 15 .

The filter 11 has a by-pass valve 13 to allow fluid flow when the fluid will not go through the filter element (plugged).

The by-pass valve 18 will open when the lift arms are lowered quickly with a heavy load in the bucket. This happens because a large amount of fluid is pushed out of the lift cylinders 6 through the control valve 10 and into the port block 15 . The by-pass valve 18 will also open when the fluid is cold and is too thick for fluid flow to go through the oil cooler 14 and filter 11 .

BUCKET POSITION FLOW CHART

For Models

bobcat 641, 642, 642B, 643 W/Melroe Hyd. Control Valve

and

Optionally Equipped W/Dukes Bucket Position Valve

Chart # 6570287 (Printed May 1986)

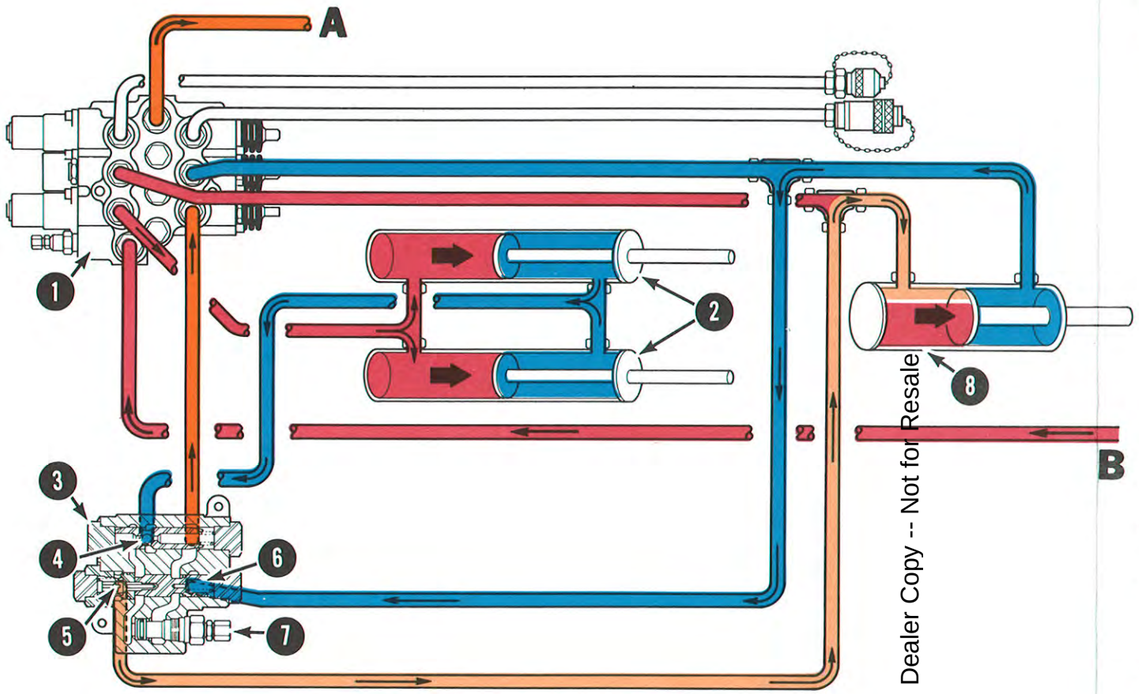

D-1689

NOTE
Chart shows fluid flow in the Lifting Position and with the Bucket Positioning Valve in operation.

NOTE
Use with Hydraulic Chart #6570266. References "A" & "B" indicate location of hydraulic circuitry connection.

RED - - - - - - - - High Pressure
BLUE - - - - - - - Low Pressure
ORANGE- - - - - Charge Pressure
LT. ORANGE- - - Bucket Position Fluid

CHART LEGEND

1. HYDRAULIC CONTROL VALVE (Melroe)
2. LIFT CYLINDERS
3. BUCKET POSITION VALVE (Optional)
4. FLOW DIVIDER SPOOL
5. CHECK POPPET VALVE
6. FLOW RETURN SPOOL
7. RELIEF VALVE
8. TILT CYLINDER

OIL FLOW EXPLANATION

BUCKET POSITIONING SYSTEM OPERATION

When the lift spool of the control valve 1 is engaged to raise the lift arms, the fluid from the rod end of the lift cylinders 2 is directed through the bucket position valve 3 . The bucket position valve has a flow divider spool 4 which directs 20% of the returning fluid directly back to the lift section of the control valve 1 . The remaining 80% of the fluid goes through a check poppet valve 5 and to the base end of the tilt cylinder 8 . This forces the tilt cylinder rod out and adjusts the position of the bucket as the lift arms are raisedd. Since the fluid is trapped in the base end of the tilt cylinder (tilt pedal is in neutral), the pressure will increase and push the flow return spool 6 open and allow fluid from the rod end of the tilt cylinder 8 to the return to the lift section of the control valve 1 along with the 20% of the returning fluid from the rod end of the lift cylinders 2 . When the tilt cylinder is fully extended and the lift arms are still raising, fluid goes over the relief valve 7 and back to the lift section of the control valve 1 .

HYDRAULIC / HYDROSTATIC FLOW CHART

For Models

642B, 643

(With 3-Spool Melroe Control Valve)

Chart # 6722238 (Printed August 1992)

NOTE

Chart shows oil flow in Forward Drive Position and with Hydraulic Cylinders Partially Extended. For Hydraulic/ Hydrostatic System Operation, refer to Sheet 2 of this publication.

RED - - - - - - - - High Pressure
BLUE - - - - - - - Low Pressure
GREEN - - - - - - Case Drain & Reservoir
ORANGE - - - - - Charge Pressure
LT. ORANGE - - Bucket Positioning Fluid

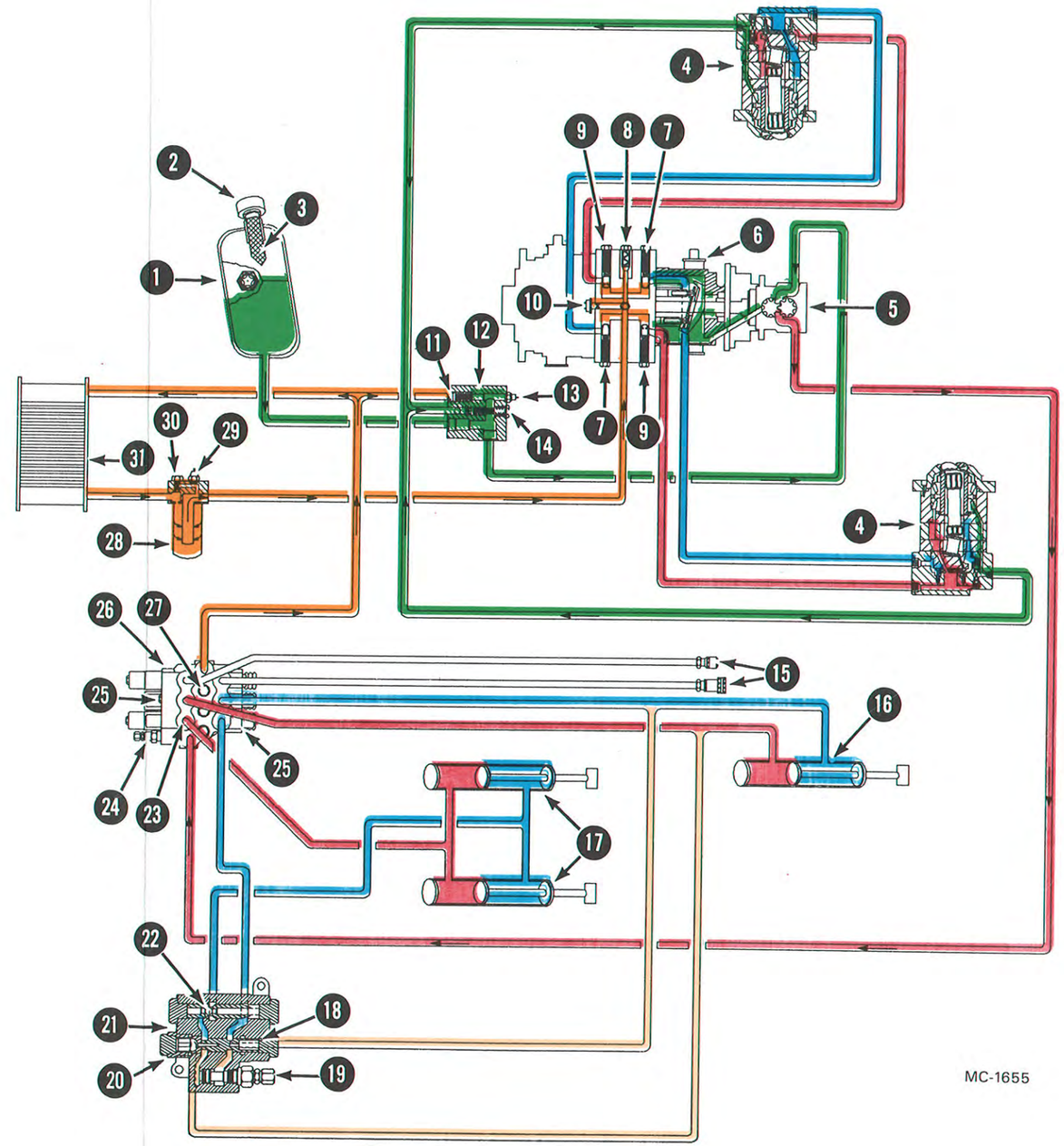

6722238 (8-92)

(Sheet 1 of 2)

Printed in U.S.A.

bobcat

HYDRAULIC / HYDROSTATIC SYSTEM OPERATION

To Be Used With

HYDRAULIC / HYDROSTATIC FLOW CHART

For Models

642B, 643

(With 3-Spool Melroe Control Valve)

Chart # 6722238 (Printed August 1992)

CHART LEGEND

1. **RESERVOIR,** . . . . . 3.5 Gals. (13,2 L)
2. **FILL CAP**
3. **SCREEN,** . . . . . 60 Mesh
4. **HYDROSTATIC MOTOR**
5. **HYDRAULIC PUMP,** Rated @ 2600 RPM
   642B (S/N 31104 & Above);
   643 (S/N 24946 & Above)
   Gear Type . . 10.8 GPM (45,8 L/min.)
   642B (S/N 13103 & Below);
   643 (S/N 24945 & Below)
   Vane Type . . . 10.8 GPM (45,8 L/min)
6. **HYDROSTATIC PUMPS**
7. **REPLENISHING VALVES (2)**
8. **CHARGE RELIEF VALVE** . . . 95-115 PSI (655-793 kPa)
9. **HIGH PRESSURE RELIEF/REPLENISHING VALVES (2):** . 3000 PSI (20685 kPa)
10. **CHARGE PRESSURE SWITCH** 17-23 PSI (117-159 kPa)
11. **OIL COOLER BY-PASS** . . 177-227 PSI (1220-1565 kPa)
12. **PORT BLOCK**
13. **TEMPERATURE SWITCH** . 225-232°F (106-112°C)
14. **CASE DRAIN RELIEF VALVE** 45-55 PSI (310-379 kPa)
15. **AUXILIARY QUICK COUPLERS (OPT.)**
16. **TILT CYLINDER**
17. **LIFT CYLINDERS**
18. **FLOW RETURN SPOOL**
19. **RELIEF VALVE** . . . . . 500-600 PSI (3448-4136 kPa)
20. **CHECK POPPET VALVE**
21. **BUCKET POSITIONING VALVE (OPT.)**
22. **FLOW DIVIDER SPOOL**
23. **RESTRICTOR (ONE WAY)** 0.125'' (3,2 mm) Dia. Orifice
24. **MAIN RELIEF VALVE,** 1850-1950 PSI (12756-13445 kPa)
25. **ANTI-CAVITATION VALVE (2)**
26. **HYDRAULIC CONTROL VALVE**
27. **LOAD CHECK VALVES (3)**
28. **HYDRAULIC/HYDROSTATIC FILTER** #3 Element
29. **DIFFERENTIAL PRESSURE SWITCH** 40 PSI (276 kPa)
30. **FILTER BY-PASS VALVE** . . . . . 50 PSI (345 kPa)
31. **OIL COOLER**

FLUID FLOW EXPLANATION

The fluid flows by gravity from the reservoir 1 to the port block 12 which is located inside the right fender. Return fluid from the oil cooler by-pass valve 12 joins with the fluid from the oil cooler 32 and hydrostatic pump 6 through the bearing of the pump 6 and supplies fluid to the hydraulic pump 5 .

The hydraulic pump 5 is driven by a shaft through the hydrostatic pumps 6 . The fluid goes from the hydraulic pump 5 to the hydraulic control valve 26 .

The control valve 26 has an adjustable relief valve 24 . When all three spools of the control valve are in the neutral position, the fluid goes through the control valve 26 and to the oil cooler 31 . If one of the spools is activated, the fluid goes out the respective port and to either the base end, or the rod end of the cylinder(s) 16 17 . ALSO SEE OPTIONAL BUCKET POSITIONING SYSTEM OPERATION. As the fluid goes into one end of the cylinder(s) 16 17 , the fluid from the other side of the cylinder flows back into the control valve 26 . When the cylinder(s) 16 17 reach the end of the stroke, the fluid pressure reaches the setting of the relief valve 24 , it will open and let the fluid by-pass the hydraulic circuit (internally) and go back to the oil cooler 31 . When the spool goes back to neutral position, then there is fluid available for the other sections of the control valve 26 . Two sections of the control valve 26 can be used at the same time if the main relief valve 24 is not open.

The fluid flows from the oil cooler 31 through the filter 28 to the center section of the hydrostatic pumps 6 . This fluid is called ''charge supply fluid''. In the center section of the pumps 6 the fluid is against two high pressure relief/replenishing valves 9 , two replenishing valves 7 and the charge relief valve 8 . When the fluid gets to the pumps 6 it activates the high pressure relief/replenishing valves 9 and replenishing valve 7 . The replenishing valves 7 9 open and let fluid into the pumps 6 for replenishing, lubrication and cooling. The pumps 6 do not need the full volume of fluid flow so there is extra fluid. This extra fluid goes to the charge relief valve 8

There are two hydrostatic pumps 6 and hydrostatic motors 4 . One pump and one motor work together as a pair to drive on one side of the loader. The other pump and motor work as a pair to drive the opposite side of the loader.

When the steering levers are in neutral, the pumps 6 and the motors 4 are not working, but do have charge pressure. When the steering levers are moved, the swashplates in the pumps 6 are angled and the fluid is forced out of the pressure side of the pumps 6 and to the motors 4 .

This flow of fluid is called ''drive pressure fluid''. Drive pressure is much higher than charge pressure causing the replenishing valves 7 9 to close, allowing the flow of fluid to go to the motors 4 . There are four replenishing valves 7 9 , two for each pump 6 . One

is for forward travel and one for reverse travel. When the loader is driven with the bucket, into a pile of material, there is resistance causing high pressure in the drive loop.

There is a relief valve built into the high pressure relief/replenishing valves 9 (for forward travel). This relief valve 9 opens, the extra fluid goes from the drive loop to the charge loop to be used again.

The hydrostatic motors 4 are a ''roller-geroler type''. The case drain fluid from the motors 4 is controlled by the case drain relief valve 14 in the port block 12 .

The filter has a by-pass valve 30 to allow fluid flow when the fluid will not go through the filter element 28 (plugged).

The cooler by-pass valve 11 will open when the lift arms are lowered quickly with a heavy load in the bucket. This happens because a large amount of fluid is pushed out of the lift cylinders 17 through the control valve 26 and into the port block 12 . The oil cooler by-pass valve 11 will also open when the fluid is cold and is too thick for fluid flow to go through the oil cooler 31 and filter 28 .

OPTIONAL BUCKET POSITIONING SYSTEM OPERATION

The lift section and tilt section of the control valve 27 work together to position the bucket as the lift aarms, of the loader, are being raised. When the lift spool of the control valve 26 is engaged to raise the lift arms, the fluid from the rod end of the lift cylinders 17 is directed through the bucket position valve 21 . The bucket position valve 21 has a flow divider spool 22 which directs 20% of the returning fluid directly back to the lift section of the control valve 26 . The remaining 80% of the fluid goes through a check poppet valve 20 and to the base end of the tilt cylinder 16 . This forces the tilt cylinder 16 rod out and adjusts the position of the bucket as the lift arms are raised. Since the fluid is trapped in the base end of the tilt cylinder 16 (tilt pedal in neutral), the pressure will increase and push the flow return spool 18 open and allow fluid from the rod end of the tilt cylinder 16 to return to the lift section of the control valve 26 along with the 20% of the returning fluid from the rod end of the lift cylinders 17 . When the tilt cylinder is fully extended and the lift arms are still raising, fluid goes over the relief valve 19 and back to the lift section of the control valve 26 .

2 HYDRAULIC SYSTEM

2–1 Troubleshooting

The following troubleshooting chart is provided as an assistance in locating and correcting problems which are most common. Many of the recommended procedures must be done by authorized Bobcat Service Personnel only.

PROBLEM	CAUSE
The hydraulic system will not operate.	1, 2, 3, 5, 8
Red light comes on when hydraulics are activated.	3
Slow hydraulic system action.	1, 3, 4, 5, 6, 8
Hydraulic action is not smooth.	1, 4, 5, 6, 7
Lift arms go up slowly at full engine RPM.	1, 3, 4, 5, 6, 7, 8, 9
The lift arms or Bob–Tach will move with the pedal in neutral position.	4
The lift arms come down with the pedal in the neutral position.	4, 9, 10, 11

KEY TO CORRECT THE CAUSE
1. The fluid level is not correct.
2. The pedal linkage is disconnected.
3. The hydraulic pump has damage.
4. The pedal linkage is not adjusted correctly.
5. Relief valve is not at the correct pressure.
6. Suction leak on the inlet side of the hydraulic pump.
7. Fluid is cold. Wrong Viscosity oil (See Oil Chart).
8. Using the loader for more than its rated capacity.
9. Internal leak at the lift cylinder(s).
10. External leak at the lift cylinder(s).
11. Damage lift spool.

2–2 HYDRAULIC SYSTEM INFORMATION

IMPORTANT

When repairing hydrostatic and hydraulic systems, clean the work area before disassembly and keep all parts clean. Always use caps and plugs on hoses, tubelines and ports to keep dirt out. Dirt can quickly damage the system.

I–2003–0888

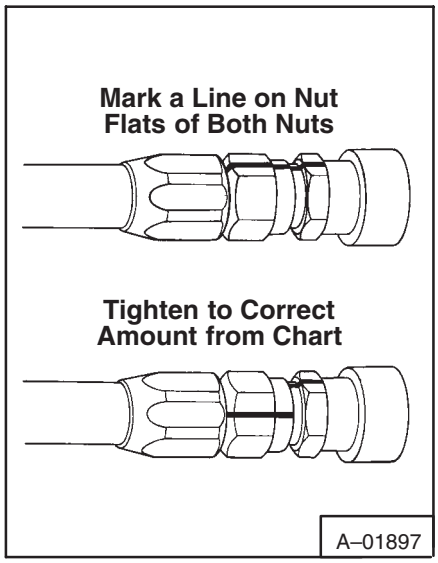

Fig. 2–1 Tightening Flare Fittings

2–2.1 37° Flare Connections

Use the following procedure to tighten the flare fittings:

1. Tighten the nut until it makes contact with the seat.
2. Make a mark across the *Flats* of both the male and female parts of the connection (Fig. 2–1).
3. Use the chart below to find the correct tightness needed.

Wrench Size	Tube Size Outside Diameter	Thread Size	Rotate No. of Hex Flats
5/8 inch	5/16 inch	1/2–20	2–2/2
11/16 inch	3/8 inch	9/16–18	2
7/8 inch	1/2 inch	3/4–16	2
1 inch	5/8 inch	7/8–14	1–1/2–2
1–1/4 inch	3/4 inch	1–1/16–12	1
1–3/8 inch	1 inch	1–5/16–12	3/4–1
2 inch	1–1/4 inch	1–5/8–12	3/4–1
2–1/4 inch	1–1/2 inch	1–7/8–12	1/2–3/4

If the fitting leaks after tightening, disconnect it and inspect the seat area for damage. Replace as needed.

2–2.2 Straight Thread O–ring Fitting

When installing this fitting, the O–ring must be first lubricated with grease. Loosen the jam nut, turn the fitting into position and connect the tubeline. Then tighten the jam nut.

Tighten the jam nut until it and the washer are tight against the surface (Fig. 2–2). The O–ring must be pushed into location as shown.

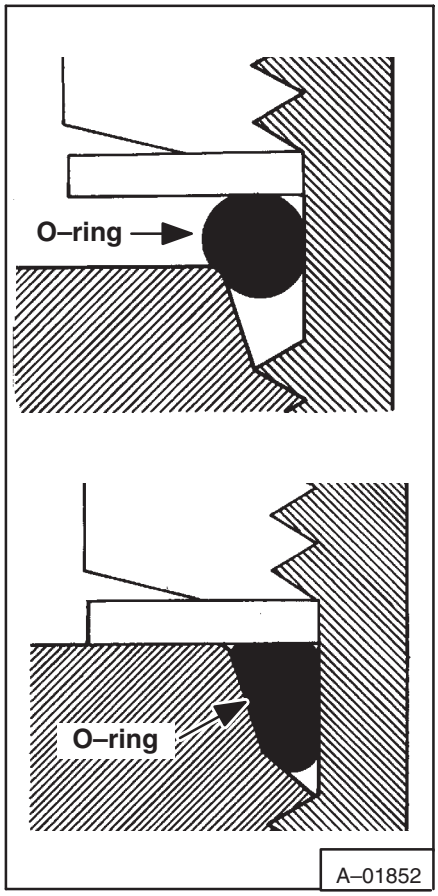

Fig. 2–2 Straight Thread Seal

2–2.3 Tubelines And Hoses

Make replacement of tubelines which are bent or have become flat. There will be a restriction of fluid flow, which will make for slow hydraulic action and cause heat. Make replacement of hoses which show signs of wear, damage or weather cracked rubber.

When installing tubelines or hoses, make sure you use two wrenches when tightening them.

2–3 HYDRAULIC CONTROL VALVE (Victor)

IMPORTANT

When repairing hydrostatic and hydraulic systems, clean the work area before disassembly and keep all parts clean. Always use caps and plugs on hoses, tubelines and ports to keep dirt out. Dirt can quickly damage the system.

I–2003–0888

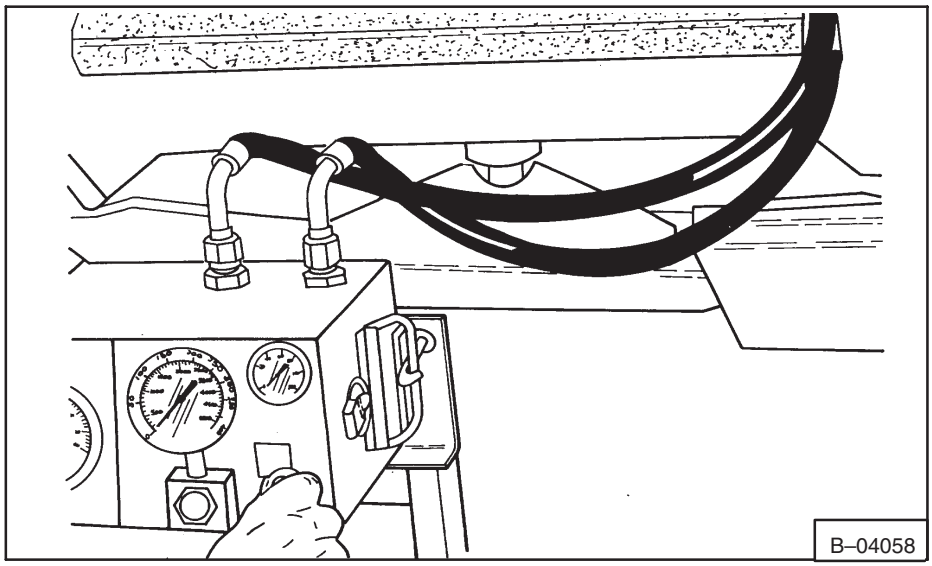

Fig. 2–3 Checking The Relief Valve

Wear in the control valve or spools will cause the hydraulic cylinders to move when the controls are in neutral position. Wear can also cause loss of hydraulic power.

If the lift arm or tilt cylinder still move or extend after they have been checked and no damage has been found, check the control valve for the following:

1. Spool not centering in the valve section when the pedal is released. The spring can be broken or check the pedal linkage and adjustit so it will keep the spool in the neutral position.
2. Check for leaks in the valve because of wear or damaged valve body.
3. Replace valve as necessary.

2–3.1 Relief Valve

Checking The Relief Valve

The tools listed will be needed to do the following procedure:

MEL10003 Tester
MEL10006 Flow Meter Test Kit

NOTE: Oil must be warm to do this procedure.

1. Stop the engine.

⚠ WARNING

Loader must be restrained for some service and repair. When balance of loader is changed by removal of lift arms or engine, or when it is necessary to rotate axles, jackstands should be put under both front axles and both rear corners of frame. Blocks by wheels can be climbed and do not stop loader.

W–2310–0398

2. Activate the auxiliary hydraulic control (right steering lever) to release the hydraulic pressure.
3. Connect the male–end quick coupler to the inlet of the tester and the female–end quick coupler to the outlet (Fig. 2–3).

IMPORTANT

The hydraulic tester must be in the fully open position before you start the engine.

I–2024–0284

4. Start the engine and run at high idle.
5. Activate the auxiliary hydraulic control (right steering lever) to put pressure into the hydraulic tester (inlet port).
6. Read the pressure gauge. The pressure must be 1950 PSI (13445 kPa).
7. Turn the allen screw in to increase the pressure or out to decrease the pressure (Fig. 2–4).

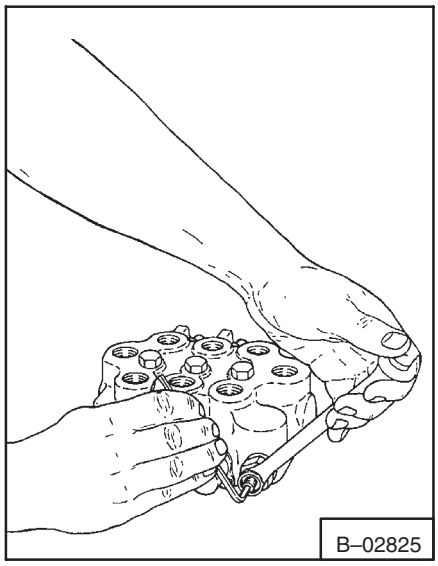

Fig. 2–4 Adjusting Relief Valve

Removal Of The Relief Valve

1. Stop the engine.
2. Activate the hydraulic controls to release the hydraulic pressure.
3. LIft the operator cab (See Paragraph 5–1, Page 5–1).
4. Clean the control valve area.
5. Loosen the relief valve (Fig. 2–5, Item 1).
6. Remove the relief valve from the control valve.
7. Clean and inspect the relief valve.
8. Replace the relief valve if it is damaged or if it is not working correctly.

Installation Of The Relief Valve

1. Install new O–rings and washers on the relief valve (Fig. 2–6, Item 1). Install the relief valve in the control valve and tighten.
2. Check the hydraulic pressure using the above procedure.
3. If the pressure is not correct, adjust the relief valve (See Paragraph 2–31A).
4. Lower the operator cab (See Paragraph 5–1, Page 5–1).
5. Remove the hydraulic tester and remove the jackstands from under the loader frame.

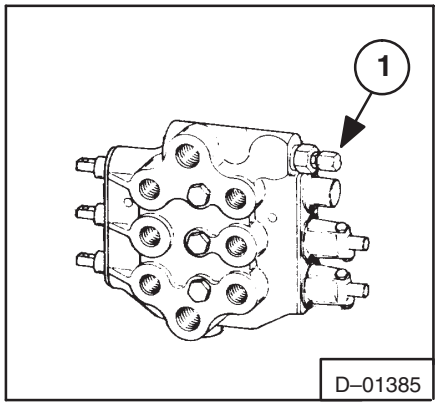

Fig. 2–5 Location Of Relief Valve

2–3.2 Removal Of The Control Valve

⚠ WARNING

Loader must be restrained for some service and repair. When balance of loader is changed by removal of lift arms or engine, or when it is necessary to rotate axles, jackstands should be put under both front axles and both rear corners of frame. Blocks by wheels can be climbed and do not stop loader.

W–2310–0398

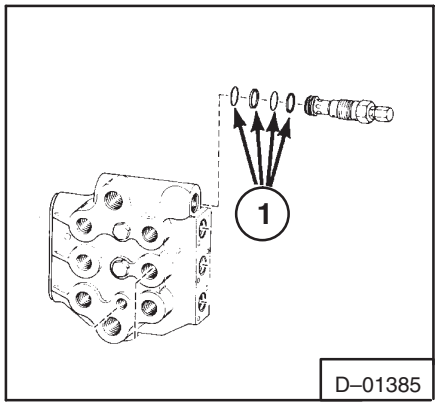

Fig. 2–6 Relief Valve

1. Activate all the hydraulic controls to release the hydraulic pressure.

2. Raise the operator cab (See Paragraph 5–1, Page 5–1).

3. Remove the front cover (Fig. 2–7).

4. Clean the control valve area. Always use caps and plugs in the ports and tubelines.

5. Remove all the tubelines from the control valve.

6. Remove the hydraulic pedal linkages at the control valve.

7. Remove the two bolts which hold the control valve to the fender.

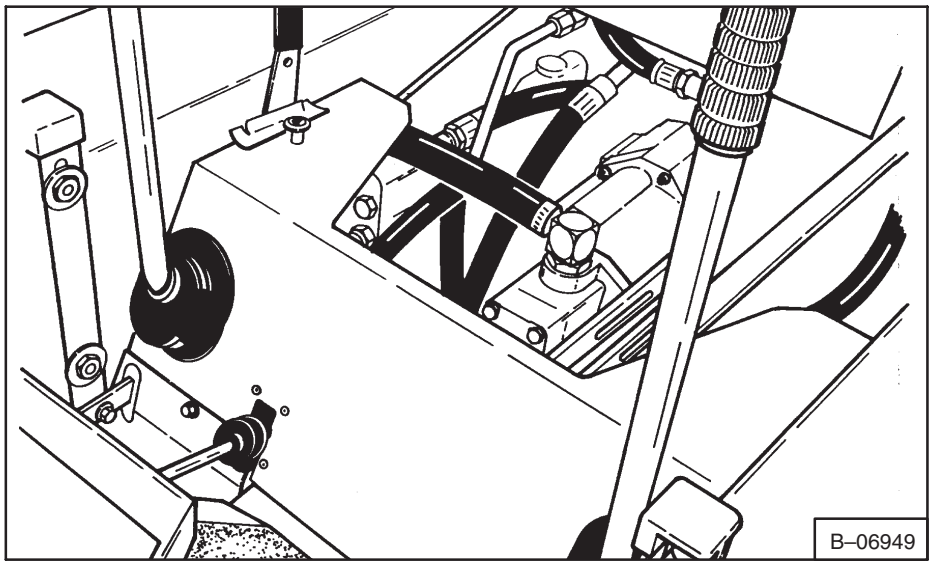

Fig. 2–7 Removing Front Panel

2–3.3 Disassembly Of The Control Valve (Victor) (Fig. 2–8)

The tool listed will be needed to do the following procedure:

MEL1074 O–Ring Seal Hook

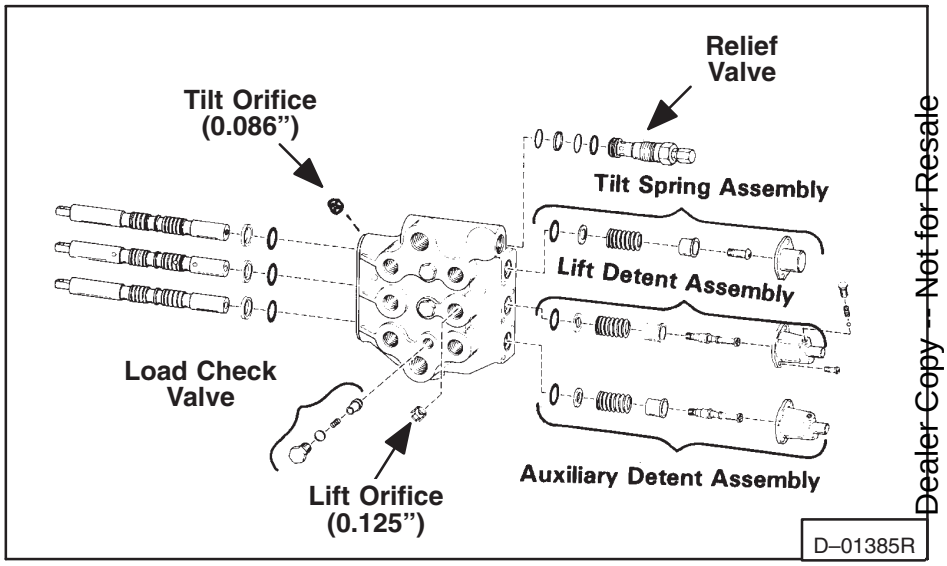

Fig. 2–8 Control Valve Assembly

IMPORTANT

When repairing hydrostatic and hydraulic systems, clean the work area before disassembly and keep all parts clean. Always use caps and plugs on hoses, tubelines and ports to keep dirt out. Dirt can quickly damage the system.

I–2003–0888

1. Put the valve in a vise.

2. Remove the detent cap screws, springs and balls (Fig. 2–9).

3. Remove the detent cap fastening screws (Fig. 2–10) and remove the caps (Fig. 2–11).

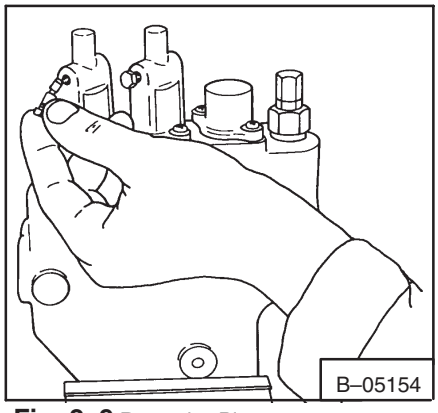

Fig. 2–9 Removing Plug

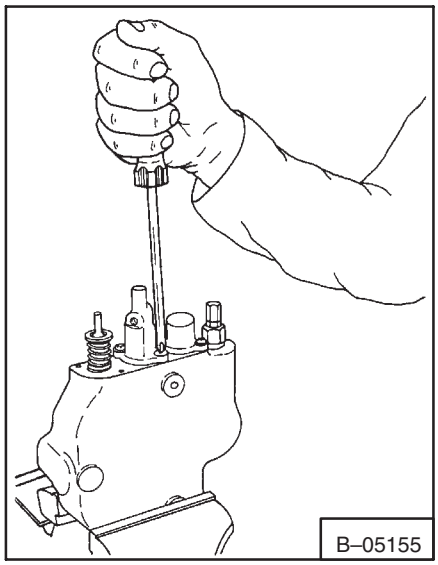

Fig. 2–10 Removing Screw

NOTE: Mark the location of each spool and return it to the same bore before assembly.

4. Remove the spools from the control valve (Fig. 2–12). Put the spools on a soft cloth after removal.

5. Remove the spool bolts (Fig. 2–13). Hold onto the springs with your hand.

6. Remove the positioner assembles from the spools.

7. Remove the O–ring from the lift spool bolt.

NOTE: When installing lift spool make sure the O–ring is not damaged.

8. Remove the wiper seals (Fig. 2–14) and the O–ring (Fig. 2–15), from the bores of the linkage end of the control valve.

9. Remove the O–rings from the end cap side of the valve (Fig. 2–16).

10. Remove the relief valve (See Paragraph 2–3.1, Page 2–3).

11. Remove the load check valves (Fig. 2–17 & 2–18).

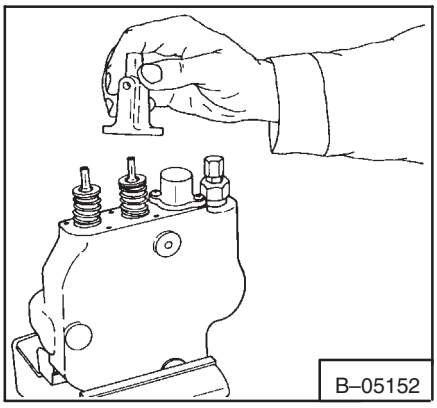

Fig. 2–11 Removing Spool Cap

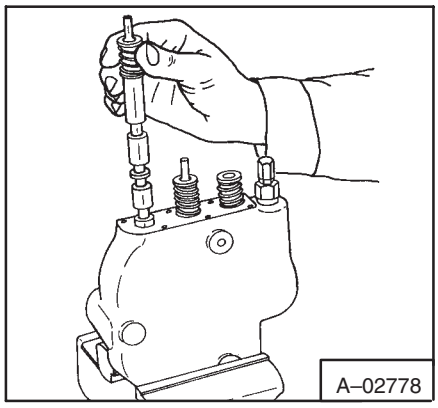

Fig. 2–12 Removing Spool

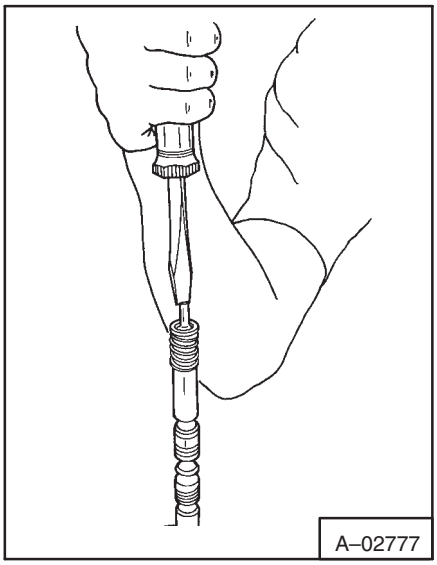

Fig. 2–13 Removing Spool Bolt

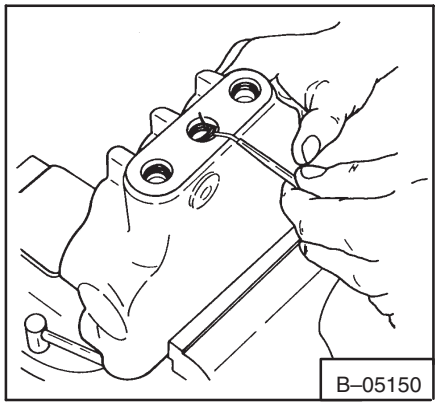

Fig. 2–14 Removing Wiper Seal

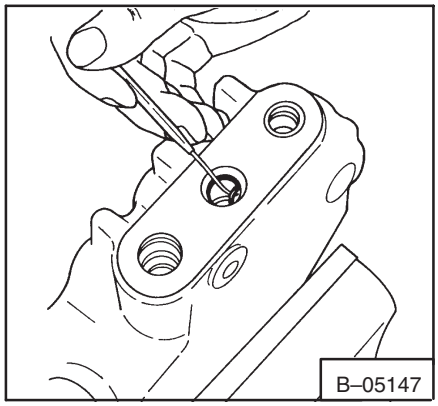

Fig. 2–15 Removing O–Ring

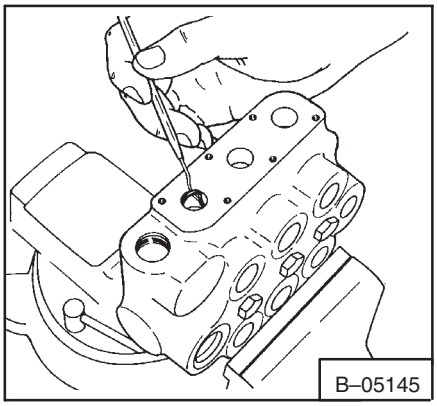

Fig. 2–16 Removing O–Ring

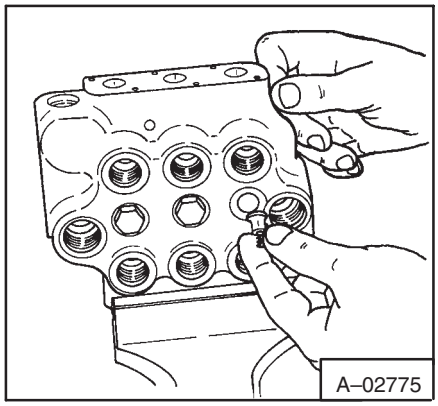

Fig. 2–17 Removing Load Checks

2–3.4 Assembly And Inspection Of The Control Valve (Fig. 2–19)

NOTE: Use new O–rings and seals during assemblyLubricate all seals and O–rings before installation.

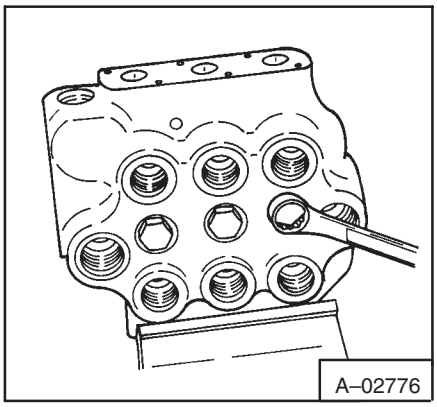

Fig. 2–18 Removing Load Checks

1. Clean all O–ring grooves.
2. Install front (linkage end) O–rings and wiper seals (Fig. 2–19, Item 1).
3. Install the tilt spool from the rear of the control valve and push the spool through so the end of the spool is just extended past the rear O–ring groove.
4. Install the rear O–ring and push the spool to the rear into the O–ring.
5. Install the cap on the tilt spool. Tighten the bolt 6–8 ft.–lbs. (8–11 Nm) torque.
6. Install the lift and auxiliary spools using the same procedure as step 5. Put a screwdriver through the hole in the tilt spool to keep the other spools from moving when installing the detent caps (Fig. 2–20).
7. Install the detent caps and install the balls, springs and screws for the detent (Fig. 2–21). Install the bolts and tighten 6–8 ft.–lbs. (8–11 Nm) torque.
8. Install the control valve into the loader.

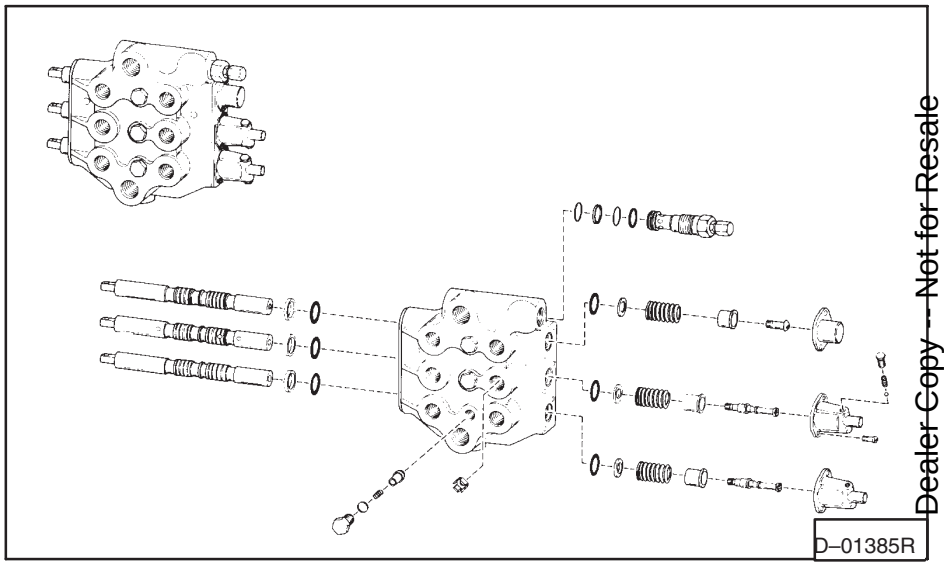

Fig. 2–19 Control Valve Assembly

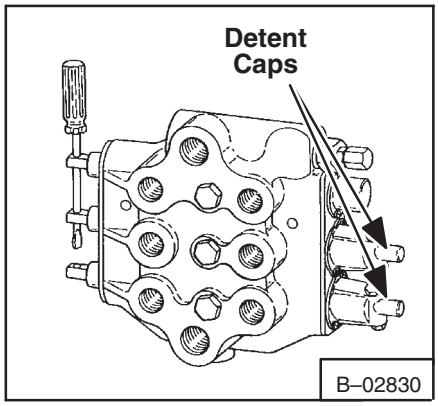

Fig. 2–20 Installing Detent Caps

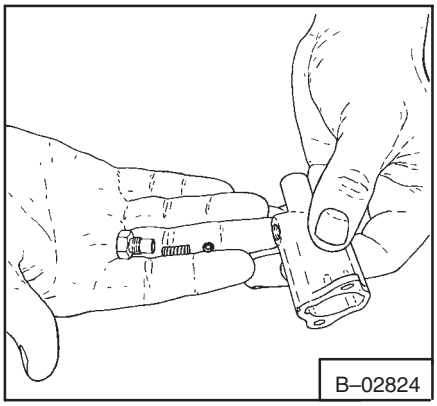

Fig. 2–21 Installing Detent

2–3A HYDRAULIC CONTROL VALVE (Melroe)

2–3.1A Relief Valve

Adjusting the Relief Valve

1. Stop the engine and open the rear door.

2. Clean the area around the control valve.

NOTE: The relief valve does not need to be removed from the control valve to be adjusted.

3. Remove the cap from the relief valve (Fig. 2–22a).

4. Use an allen wrench to adjust the relief valve (Fig. 2–23a). Turn clockwise to increase the pressure; turn counterclockwise to decrease the pressure.

5. Check the hydraulic pressure. (Use procedure 2–3.1, Check the Relief Valve, Page 2–4). If the pressure is not correct, adjust the relief valve until the pressure is correct.

6. Install and tighten the cap on the relief valve.

2–3.2A Installing A New Relief Valve

1. Remove the relief valve from the control valve (Fig. 2–22a).

2. Use a new O–ring on the relief valve and install it into thecontrol valve and tighten.

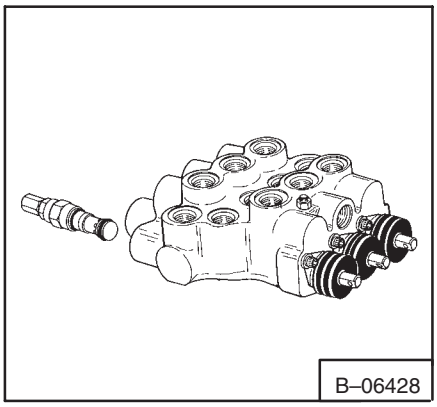

Fig. 2–22a Main Relief Valve

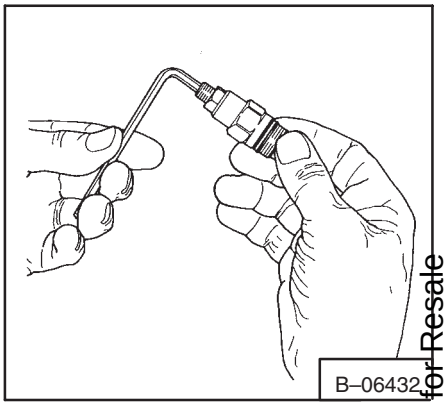

Fig. 2–23a Adjusting The Relief Valve

2–3.3A Disassembling The Control Valve

IMPORTANT

When repairing hydrostatic and hydraulic systems, clean the work area before disassembly and keep all parts clean. Always use caps and plugs on hoses, tubelines and ports to keep dirt out. Dirt can quickly damage the system.

I–2003–0888

1. Mark each valve section and spool so that each spool will bereturned to its' original bore during assembly.

2. Use bolts to fasten the control valve to a work bench for easier disassembly.

3. Remove the load check valves (Fig. 2–24a, C1, C2, C3) from the control valve.

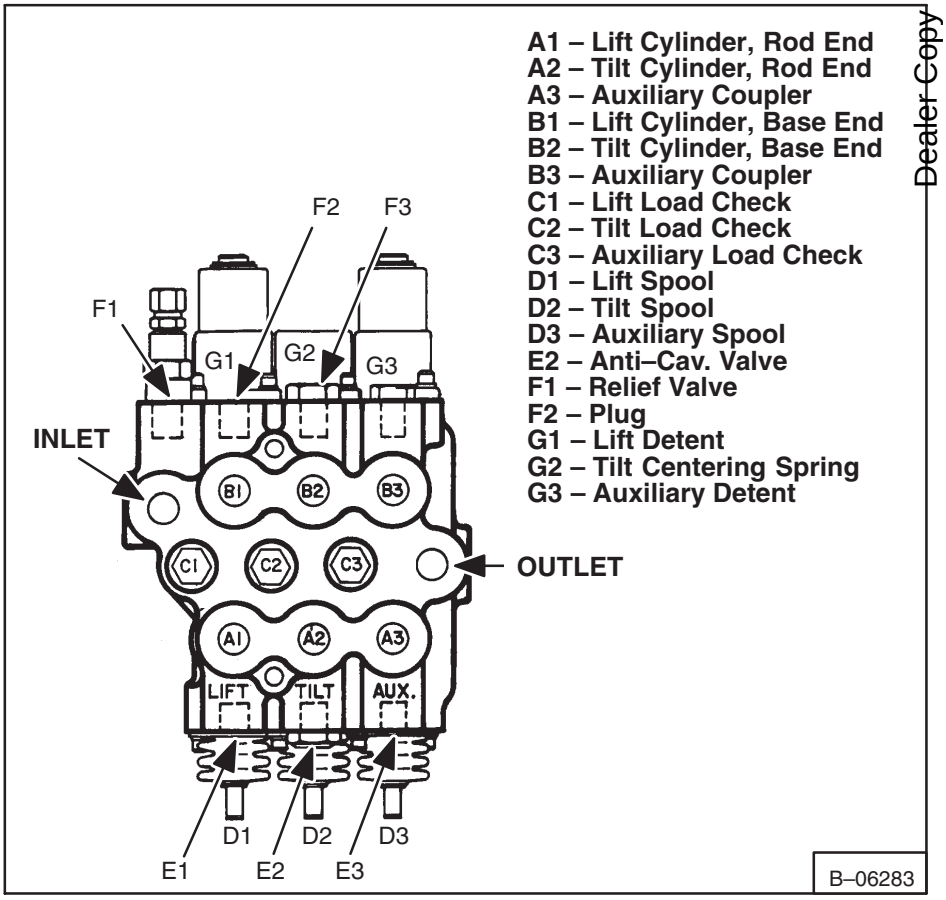

Fig. 2–24a Control Valve Assembly

4. Remove the anti–cavitation valve (Fig. 2–25a) from the control valve (Fig. 2–24a, E2). Remove the O–rings and back–up washers from the anti–cavitation valve.

5. Remove the plug (Fig. 2–26a) from the control valve (Fig. 2–24a, F2).

6. Remove the O–rings and back–up washer from the plug.

7. Remove the main relief valve (Fig. 2–27a) from the control valve (Fig. 2–24a, F1).

8. Remove the bolts (Fig. 2–28a, Item 1), the rubber boots (Item 2), boot retainer (Item 3) and filter (Item 4) from the three valve spools (Fig. 2–24a, D1, D2 and D3).

9. Use an O–ring tool to remove the O–rings from the three spools (Fig. 2–29a).

10. Remove the detent snap ring and washer from the lift section end cap (Fig. 2–30a).

11. Remove the bolts (Fig. 2–31a) which fasten the detent cap to the control valve.

12. Remove the detent cap from the lift spool.

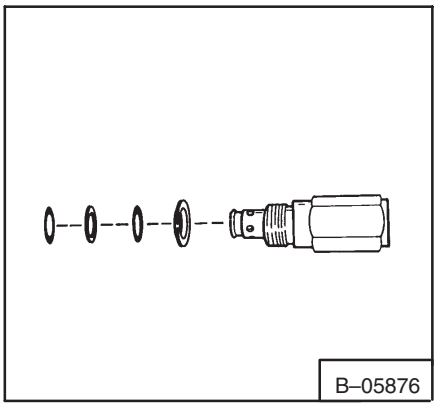

Fig. 2–25a Anti–Cavitation Valve

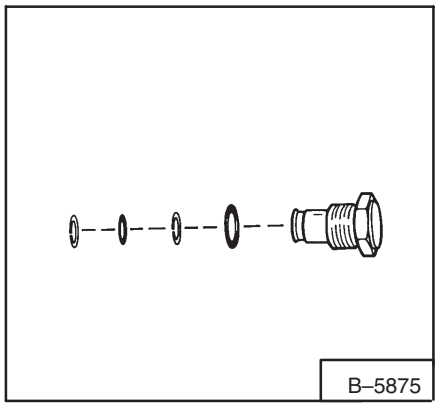

Fig. 2–26a Plug

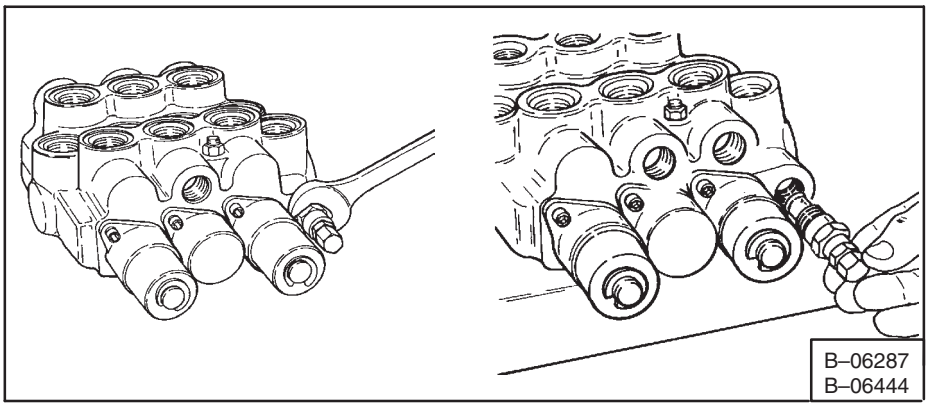

Fig. 2–27a Main Relief Valve

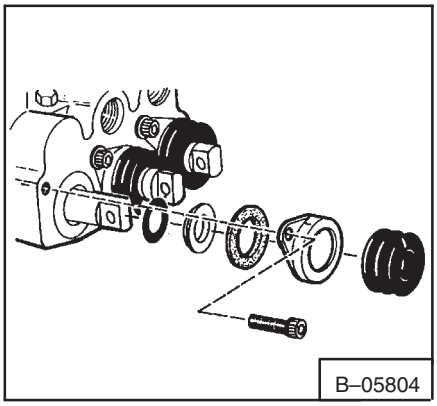

Fig. 2–28a Rubber Boot Assembly

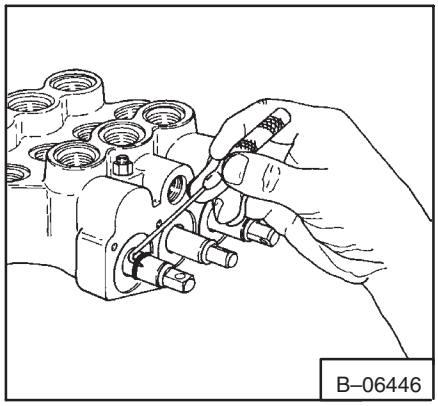

Fig. 2–20a Removing O–Rings

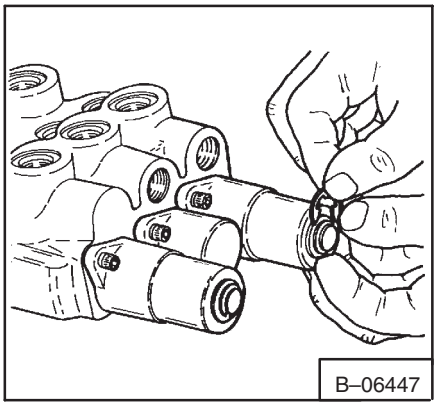

Fig. 2–30a Detent Snap

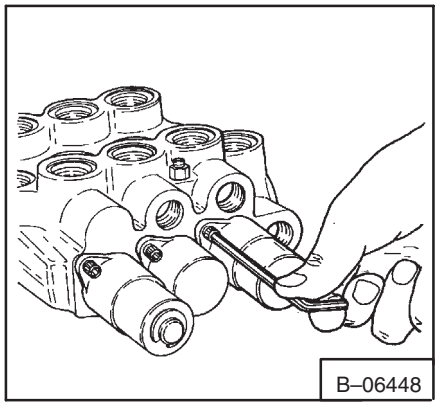

Fig. 2–31a End Cap Bolts

IMPORTANT

The detent assembly has small springs and balls. Do not lose these parts during disassembly and assembly.

I–2012–0284

13. Remove the balls and spring (Fig. 2–32a) from the detent sleeve.

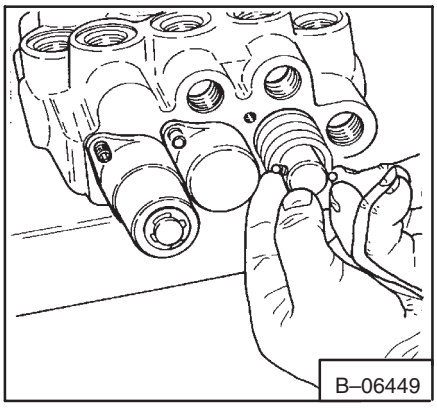

Fig. 2–32a Detent Balls And Spring

⚠ WARNING

Be careful when removing or installing parts which have spring tension. Wear safety glasses or goggles. Failure to obey warnings, can cause injury or death.

W–2311–0398

14. Use an allen wrench to remove the bolt which hold the centering spring to the lift spool (Fig. 2–33a).

15. Remove the bolt and spring from the spool.

16. Remove the detent adaptor from the spool.

17. Remove the back–up washer (Fig. 2–34a) and the O–ring.

18. Remove the spool from the control valve.

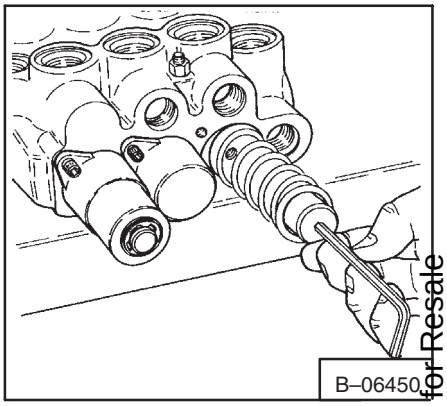

Fig. 2–33a Centering Spring Bolt

IMPORTANT

The detent assembly has small springs and balls. Do not lose these parts during disassembly and assembly.

I–2012–0284

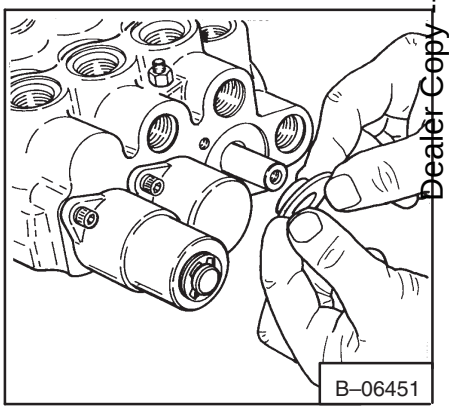

Fig. 2–34a Back–Up Washer

IMPORTANT

Avoid damage to the machined surfaces of spools. Spool damage can affect smooth operation or cause internal leakage.

I–2013–0284

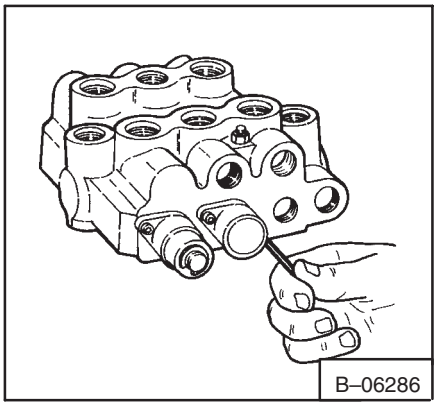

Fig. 2–35a End Cap Bolts

19. Be sure to mark each valve section and spool so that each spool will be installed in its' original bore during assembly.

20. Remove the bolts from the end cap of the lift spool (Fig. 2–53a).

21. Remove the end cap.

WARNING

Be careful when removing or installing parts which have spring tension. Wear safety glasses or goggles. Failure to obey warnings can cause injury or death.

W–2311–0398

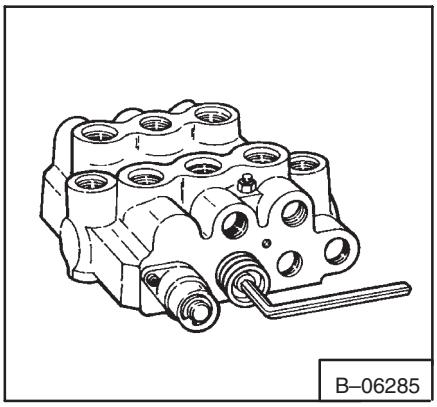

Fig. 2–36a Centering Spring Bolt

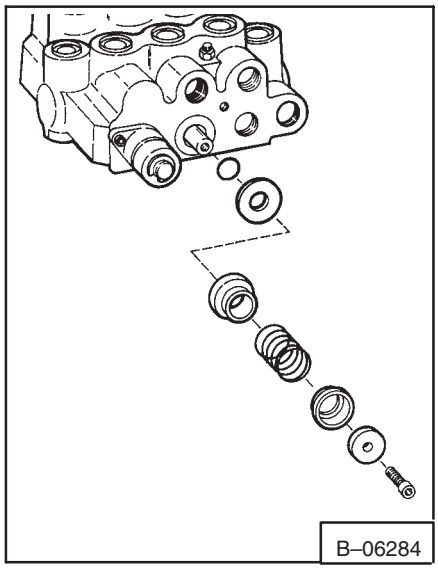

Fig. 2–37a Centering Spring Assembly

22. Use an allen wrench to remove the bolt which holds the centering springto the tilt spool (Fig. 2–36a).
23. Remove the bolt, spring, back–up washer and O–ring (Fig. 2–37a).
24. Remove the tilt spool from the control valve (Fig. 2–24a, Item D2).
25. Repeat steps 13 thru 21 for the auxiliary section detent and spool.

2–3.4A Inspecting The Control Valve

1. Check the spools for scratches or wear.
2. Check that the spools are not loose in their bores. If the spools are loose there may be damage or wear in the control valve body.
3. Check for broken centering springs.
4. Check for worn load check seats.
5. Check for worn poppets (load check).
6. Check for wear or damage to the rubber boots, boot retainers and filters.
7. Replace any parts that are worn or damaged.

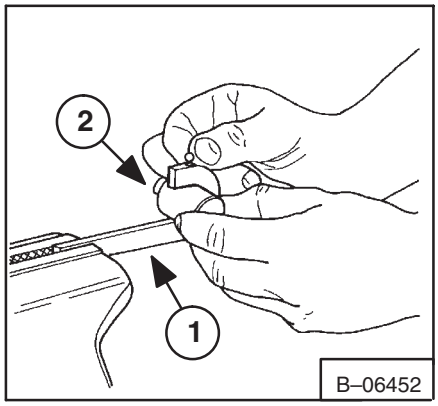

Fig. 2–38a Detent Tool

2–3.5A Assembling The Control Valve

The tools listed will be needed to do the following procedures.

MEL

1. Install the detent tool in the vise (Fig. 2–38a, Item 1).

2. Install the detent adaptor (Fig. 2–39a, Item 1) into the detent tool (Fig. 2–40a). Align the hole in the tool and the hole in the adaptor.

3. Install the ball, spring and ball into the tool and into the adaptor (Fig. 2–40a).

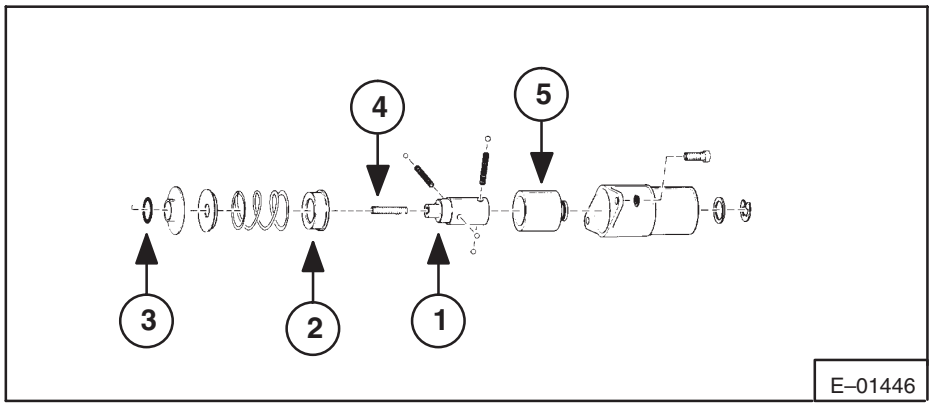

Fig. 2–39a Lift & Auxiliary Detent Assembly

4. Turn the bolt into the tool to hold the balls and spring in position.

5. Put grease in the spring end cap. Install the spring end cap (Fig. 2–39a, Item 2) on the adaptor (Fig. 2–41a) in the correct position. Remove the detent tool.

6. Put oil on the O–ring (Fig. 2–39a, Item 3) and install it on the spool.

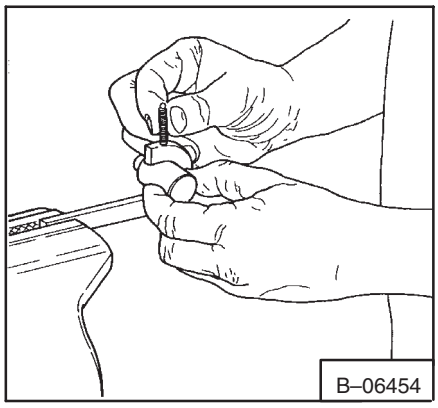

Fig. 2–40a Installing Balls & Spring

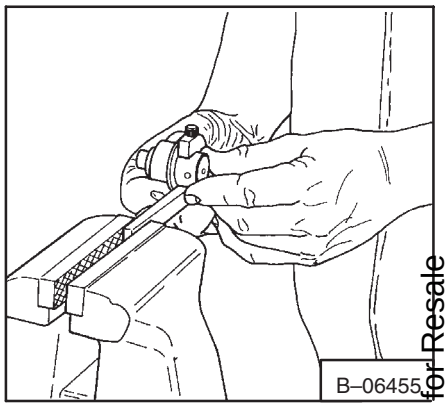

Fig. 2–41a Installing Spring End Cap

7. Put the spool in the vise and hold it at the linkage end of the spool.

8. Put LOCTITE on the threads of the adaptor stud (Fig. 2–39a, Item 4).

9. Install the back–up washer, spring end cap, spring and the detent adaptor on the spool.

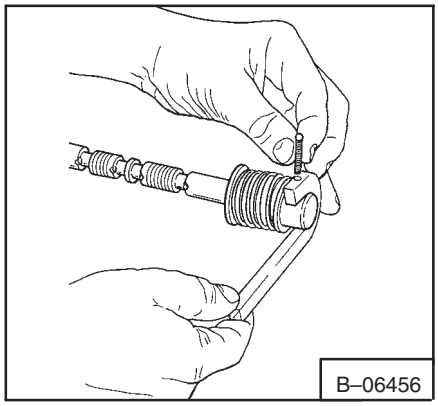

Fig. 2–42a Detent Tool

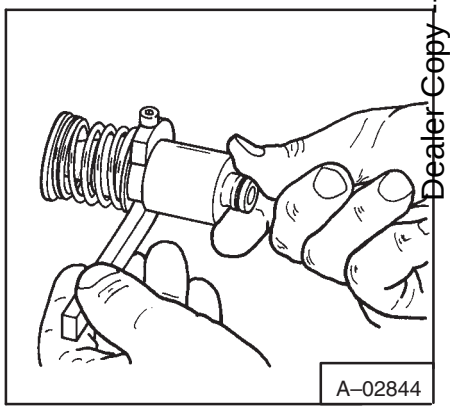

Fig. 2–43a Installing Detent Sleeve

10. Install the detent tool (Fig. 2–42a, Item 1) on the adaptor.

11. Install the balls and spring into the tool and the adaptor (Fig. 2–42a). Turn the bolt into the tool to hold the balls and spring in the correct position.

12. Put grease into the detent sleeve. Install the detent sleeve (Fig. 2–39a, Item 5) on the adaptor and pull the tool away and push the sleeve into position (Fig. 2–43a).

13. Remove the spool from the vise. Put oil on the spool. Carefully install the spool into the auxiliary section of the control valve.

14. Install the detent end cap.

15. Install the bolts. Tighten the bolts to 90–100 in.–lbs. (10–11 Nm) torque.

16. Install the washer and snap ring on the detent sleeve (Fig. 2–45a).

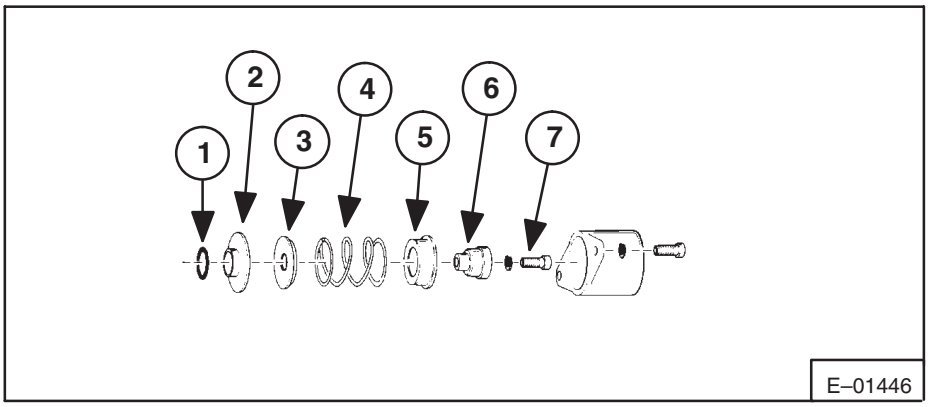

Fig. 2–44a Tilt Centering Spring Assembly

17. Put oil on the O–ring (Fig. 2–44a, Item 1). Install the O–ring on the tilt spool.

18. Put oil on the tilt spool. Carefully install it into the tilt section of the control valve.

19. Install the back–up washer, end cap, centering spring, end cap and adaptor (Fig. 2–44a, Items 2 thru 6).

20. Put LOCTITE on the bolt (Fig. 2–44a, Item 7). Install and tighten the bolt to 90–100 in.–lbs. (10–11 Nm) torque.

21. Install the end cap.

22. Install the end cap bolts. Tighten the bolts to 90–100 in.–lbs. (10–1 1 Nm) torque.

23. Repeat steps 1 thru 16 to install the detent assembly and the lift spool in the control valve.

24. Install the O–ring, filter, boot, boot retainer on each of the three spools (Fig. 2–46a).

25. Install the bolts for the boot retainers. Tighten the bolts to 90–100 in.–lbs. (10–11 Nm) torque on each of the three spools. Check all three spools for correct function and detent.

26. Install the main relief valve. Tighten to 50–60 ft.–lbs. (68–81 Nm) torque.

27. Install the plug, with new O–rings and back–up washers, into the tilt section port (Fig. 2–24a, Item F2).

28. Tighten the plug to 50–60 ft.–lbs. (68–81 Nm) torque.

29. Install the anti–cavitation valve, with new O–rings and back–up washers, into the tilt section port (Fig. 2–24a, Item E2).

30. Tighten the anti–cavitation valve to 50–60 ft.–lbs. (58–81 Nm) torque.

31. Install the load check valves into the stop section of the control valve (Fig. 2–24a, Items C1, C2 and C3). Use new O–rings and back–up washers.

32. Tighten the load check valves to 50–60 ft.–lbs. (68–81 Nm) torque.

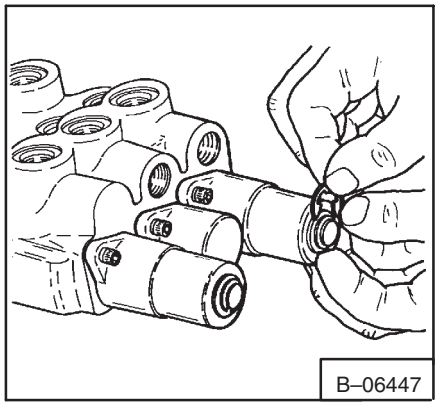

Fig. 2–45a Detent Sleeve Snap Ring

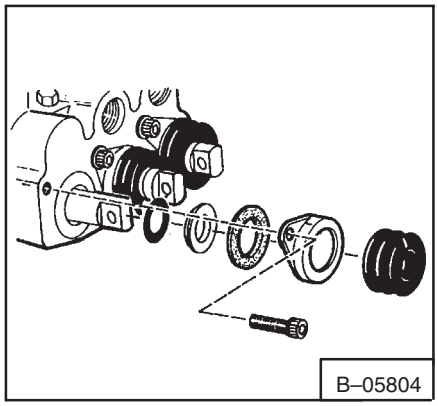

Fig. 2–46a Rubber Boot & Retainer

2–4 HYDRAULIC PUMP

2–4.1 Checking Output Of The Hydraulic Pump

WARNING

Before the cab or the lift arms are raised for service, jackstands must be put underthe rear corners of the frame. Failure to use jackstands can allow the machine to tip backward causing injury or death.

W–2014–0895

When the engine is running during service, the steering levers must be in neutral and the parking brake engaged. Failure to do so can cause injury or death.

W–2006–0284

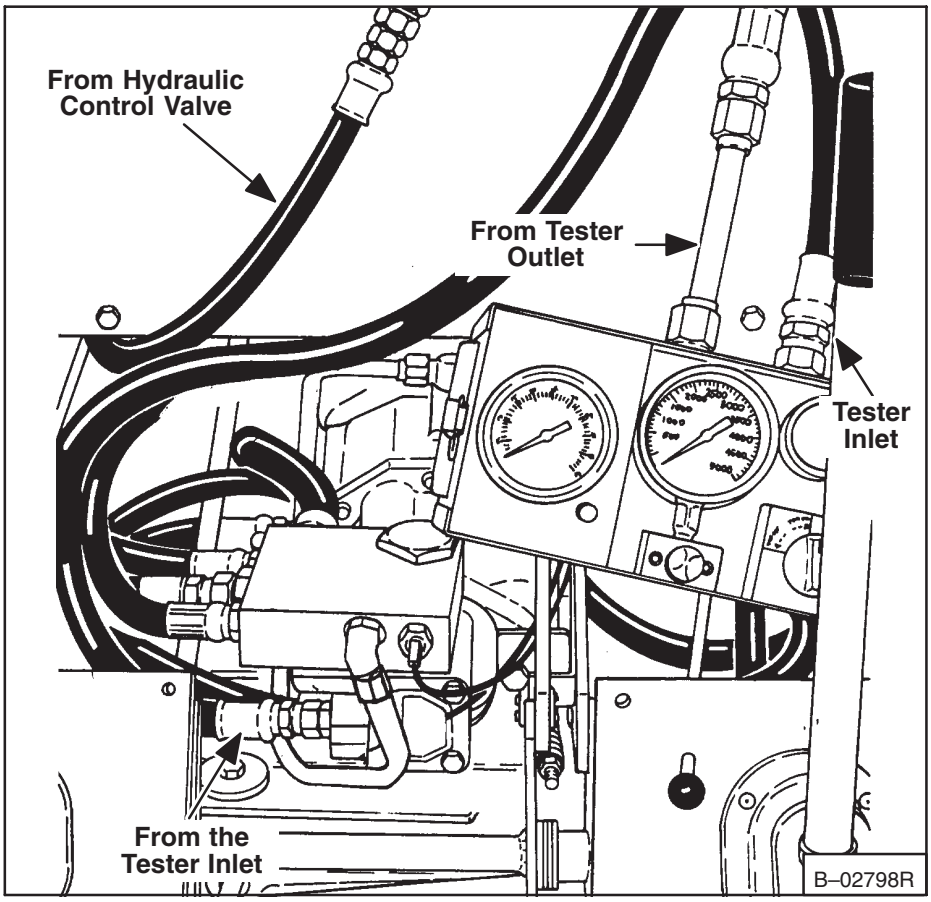

Fig. 2–22 Checking Pump Output

1. Operate the loader until the oil is warm before checking the hydraulic pump output.
2. Stop the engine.
3. Raise the operator guard (See Paragraph 5–1, Page 5–1).
4. Remove the front panel.
5. Remove the hose from the inlet of the control valve. This hose is the outlet of the hydraulic pump. Connect this hose to the inlet of the hydraulic tester (Fig. 2–22).
6. Connect the outlet hose of the hydraulic tester to the left port of the hydraulic control valve (Fig. 2–22).
7. Turn the flow control valve of the tester all the way open.
8. Start the engine and run the engine at 2500 RPM. Turn the flow control valve on the tester closed at a slow rate until the pressure gauge reads 2000 PSI (13789 kPa). The oil flow must be at least 80% of 9.5 GPM (36 L/min.). If the flow is less, repair or replace the hydraulic pump.
9. Remove the tester hydraulic hoses.
10. Connect the hose which goes from the outlet of the hydraulic pump to the inlet of the hydraulic control valve.

IMPORTANT

Do not turn the flow control valve (on tester) all the way off. If you do, there will not be a relief valve in the system.

I–2025–0284

2–4.2 Removing The Hydraulic Pump

IMPORTANT

When repairing hydrostatic and hydraulic systems, clean the work area before disassembly and keep all parts clean. Always use caps and plugs on hoses, tubelines and ports to keep dirt out. Dirt can quickly damage the system.

I–2003–0888

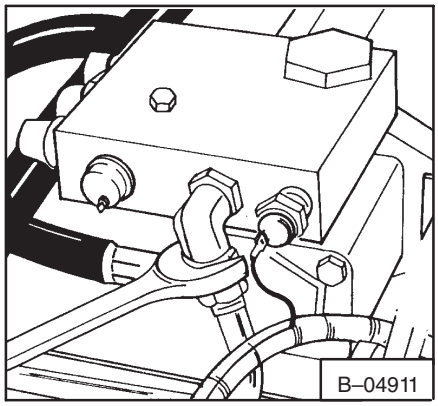

Fig. 2–23 Removing Tubelines

1. Drain the hydraulic/hydrostatic reservoir. Remove the hydraulic hoses and the tubelines from the port block (Fig. 2–23).

2. Remove the small bolt from the port block. Remove the large nut at the top of the port block (Fig. 2–24).

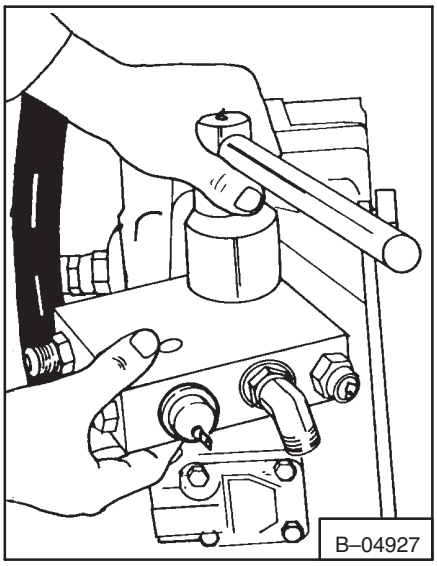

Fig. 2–24 Removing Port Block

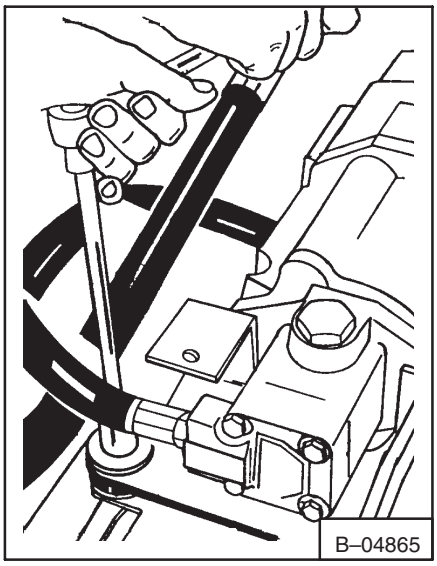

Fig. 2–25 Removing Bolts

3. Loosen the nuts from the pump mounting bolts (Fig. 2–25 & 2–26).

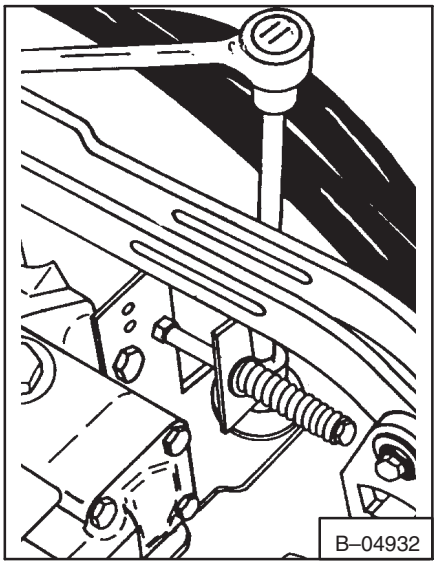

Fig. 2–26 Removing Mounting Bolts

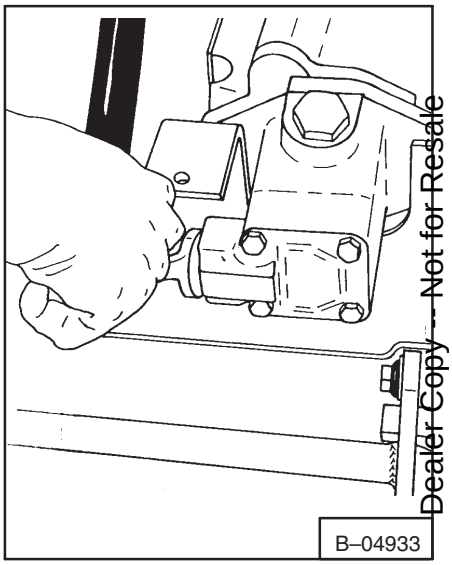

Fig. 2–27 Removing Hoses

4. Remove the outlet hose from the hydraulic pump (Fig. 2–27).

5. Remove the pump mount bolts (Fig. 2–28).

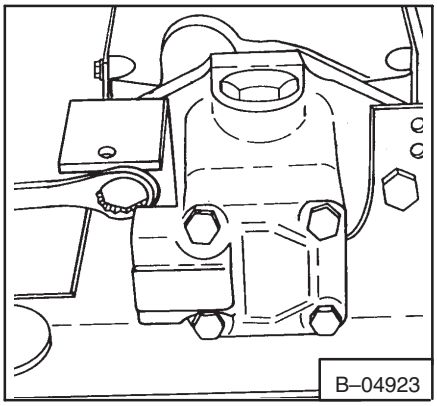

Fig. 2–28 Removing Mount

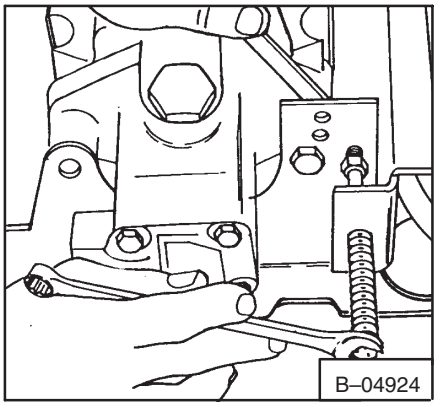

Fig. 2–29 Removing Bolt

6. Remove the steering linkage and adjustment bolt (Fig. 2–29).

7. Raise the pump a small amount and move the pump mount forward (Fig. 2–30).

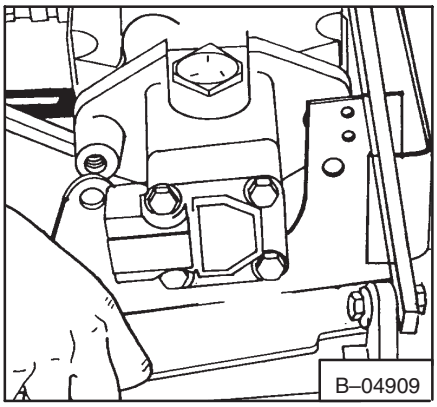

Fig. 2–30 Moving Pump

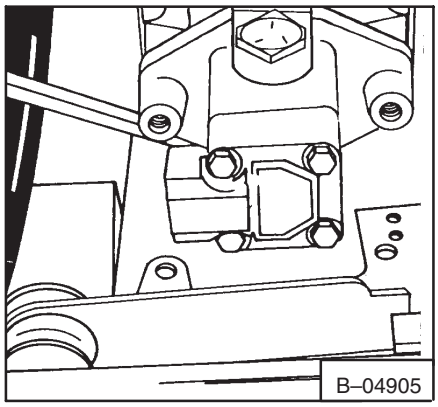

Fig. 2–31 Position Of The Pump Mount

8. Position the pump mount as shown in (Fig. 2–31).

9. Remove the inside steering linkage bar (Fig. 2–32).

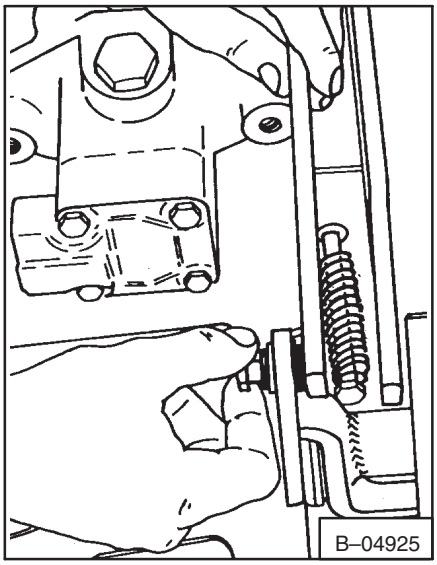

Fig. 2–32 Removing Steering Bar

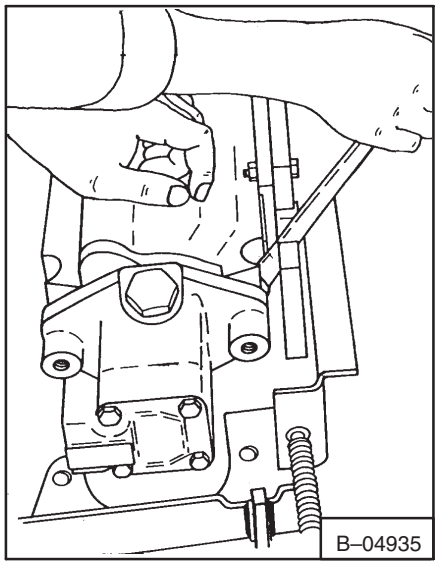

Fig. 2–33 Removing Pump Bolts

10. Remove the bolts attaching the hydraulic pump to the hydrostatic unit (Fig. 2–33).

11. Remove the hydraulic pump (Fig. 2–34).

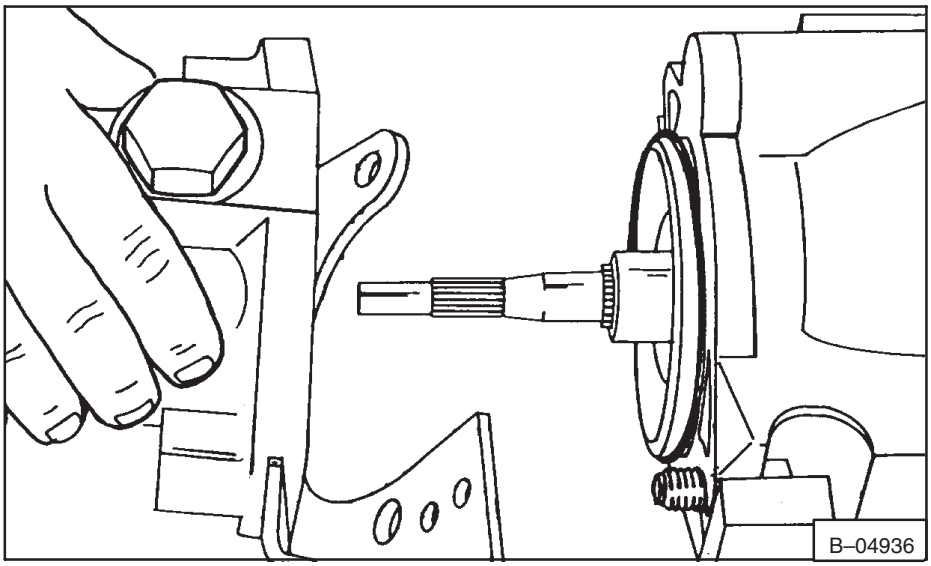

Fig. 2–34 Removing Hydraulic Pump

2–4.3 Checking The Hydraulic Pump

1. Put the hydraulic pump in a vise and mark all the sections for correct assembly.
2. Remove the bolts.
3. The seals (Fig. 2–35, Items 1 & 2) can be replaced. Check them for damage.
4. The vanes (Fig. 2–35, Item 3) and the center section (Fig. 2–35, Item 4) can be replaced. Check these items for wear and damage.
5. Bevel of vanes must be toward the direction of the arrow (Fig. 2–35, Item 6).
6. Assemble the hydraulic pump (Fig. 2–35).

2–4.4 Removing And Checking The Pump Shaft

1. Remove the snap ring (Fig. 2–36).
2. Remove the coupler (Fig. 2–37).
3. Remove the shaft (Fig. 2–38).
4. Check the shaft (Fig. 2–39) for damage and wear.

2–4.5 Installing The Hydraulic Pump

1. Install the shaft (Fig. 2–38). Turn the shaft all the way in. Then turn the shaft counterclockwise to align the splines.
2. Install the coupler (Fig. 2–37) and the snap ring (Fig. 2–36).
3. Check the O–ring (Fig. 2–35, Item 5) for the damage and replace as needed. Install the O–ring.
4. Install the hydraulic pump and tighten the bolts.
5. Install the pump mount and tighten the bolts.
6. Install the steering bar.
7. Install the port block.

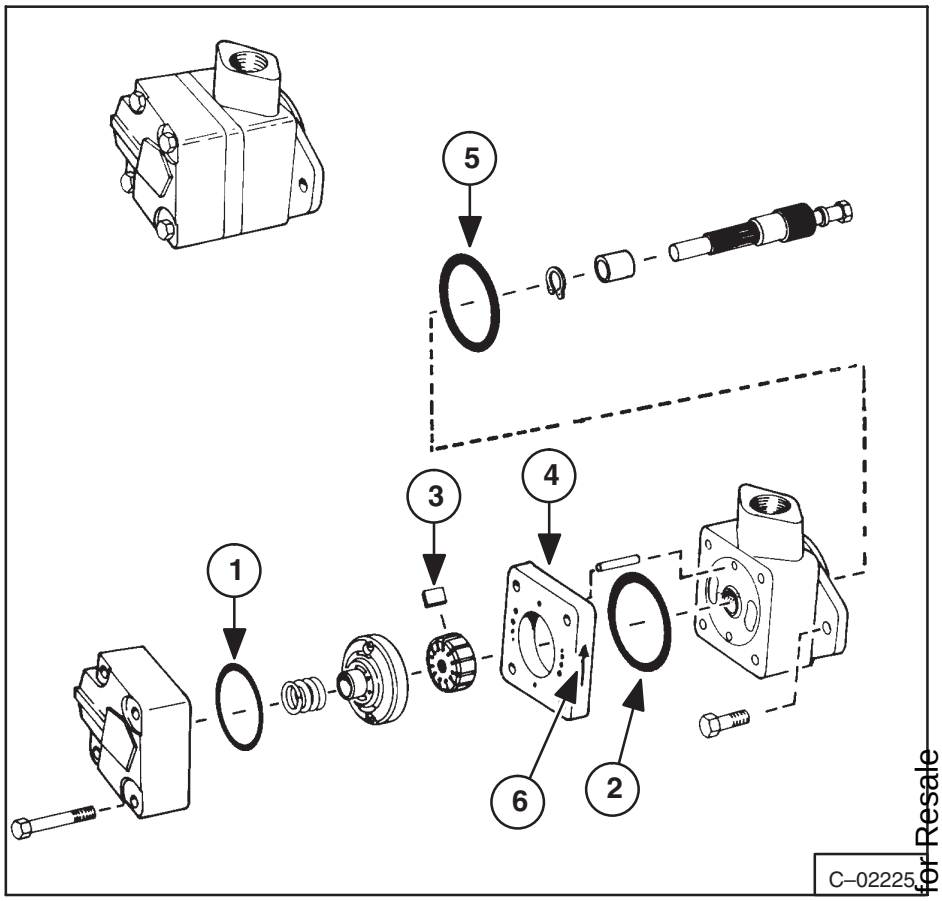

Fig. 2–35 Hydraulic Vane Pump

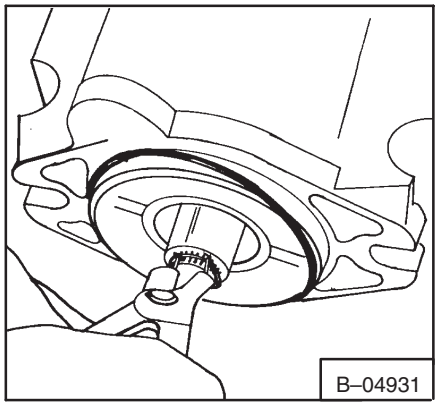

Fig. 2–36 Remove The Snap Ring

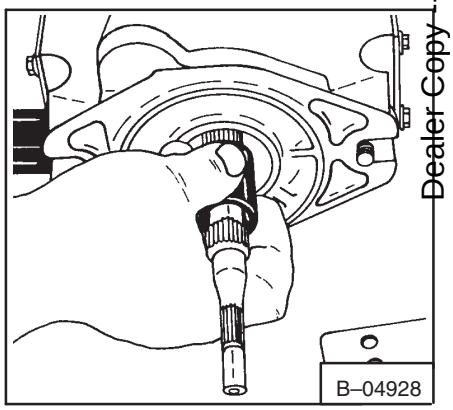

Fig. 2–37 Removing The Coupler

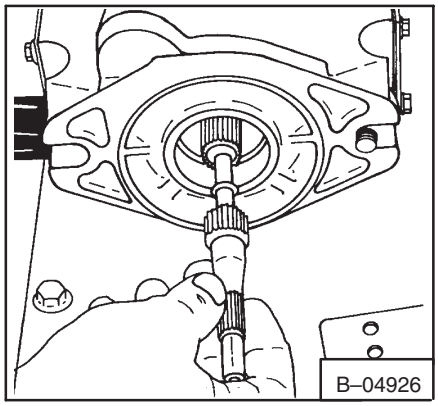

Fig. 2–38 Removing The Shaft

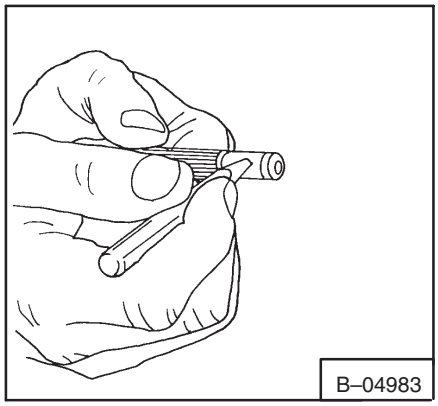

Fig. 2–39 Checking Shaft

8. Connect the hoses and the tubeline to the port block.

9. Install the panels.

10. Lower the operator cab (See Paragraph 5–1, Page 5–1).

11. Put hydraulic oil in the reservoir (See Paragraph 1–8.2, Page 1–15).

2–4.6 Starting Procedure For The Hydraulic Pump

1. Check the hydraulic/hydrostatic reservoir and add oil as needed (See Specifications for the correct oil).

⚠ WARNING

Loader must be restrained for some service and repair. When balance of loader is changed by removal of lift arms or engine, or when it is necessary to rotate axles, jackstands should be put under both front axles and both rear corners of frame. Blocks by wheels can be climbed and do not stop loader.

W–2310–0398

2. Start the engine and run it at half throttle with no hydraulics engaged for several minutes.

3. Operate the hydraulic control valve at 3 second intervals for several minutes to build up pressure.

4. Increase engine speed to full throttle and repeat step 3.

5. Slow the engine to an idle RPM and stop the engine. Check for hydraulic leaks.

6. Check the hydraulic/hydrostatic reservoir and add oil as needed.

7. Remove the jackstand from under the loader frame.

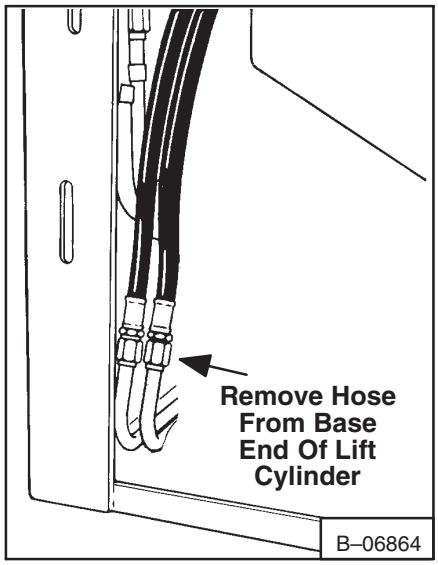

Fig. 2–40 Checking Lift Cylinder (L.H.)

2–5 LIFT CYLINDERS

2–5.1 Checking The Lift Cylinders

NOTE: Maximum cylinder drift allowed is 1.300 inches in 10 minutes with no bucket.

1. Fully lower the lift arms.

⚠ WARNING

Before the cab or the lift arms are raised for service, jackstands must be put under the rear corners of the frame. Failure to use jackstands can allow the machine to tip backward causing injury or death.

W–2014–0895

2. Open the rear door.

3. Disconnect the hose from the tubeline which goes to the base end of the lift cylinders (Fig. 2–40 & 2–41).

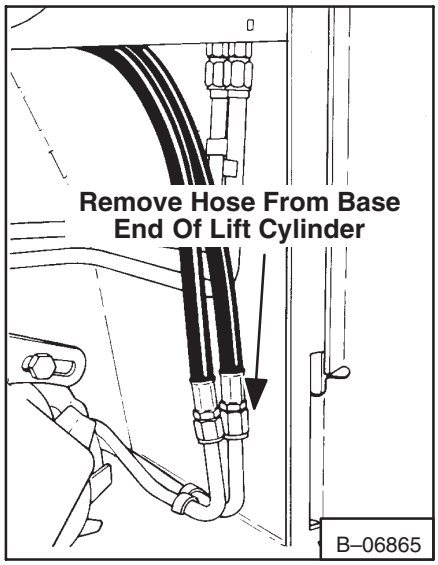

Fig. 2–41 Checking Lift Cylinder (R.H.)

4. Start the engine. Push the top (toe) of the lift pedal.

5. If there is oil leakage from the hose remove the cylinder or cylinders and make the needed repairs (See Section 2–6.2).

6. Connect the hose or hoses and tighten them.

7. Close the rear door.

8. Remove the jackstands from under the loader frame.

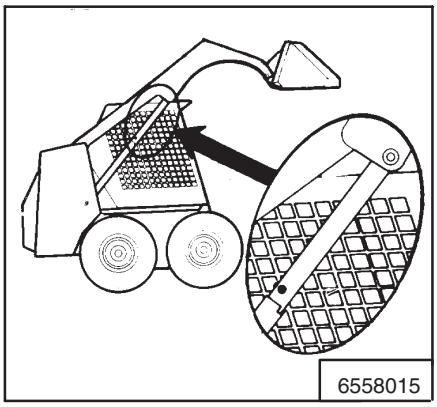

Fig. 2–42 Lift Arm Stop

2–5.2 Removing The Lift Cylinder

1. Install the lift arm stop in the lift cylinder that is NOT GOING T O BE REMOVED. You can remove only one lift cylinder at a time using this method.

   (a) Two persons are needed to install the lift arm stop. One person must be in the operator's seat with the seat belt fastened until the lift arm stop is installed.

   (b) Start the engine and raise the lift arms all the way up.

   (c) Have the second person install the lift arm stop over the rod of one cylinder (Fig. 2–42).

NOTE: Make sure the lift arm stop is tight against the cylinder rod.

   (d) Lower the lift arms until the stop is held between the lift arms and lift cylinder.

   (e) Stop the engine.

2. Activate the hydraulic controls to release the hydraulic pressure.

3. Raise the operator guard (See Paragraph 5–1, Page 5–1).

4. Open the rear door.

5. Disconnect the hoses at the base end of the cylinder.

6. Remove the locknut and the bolt at the rod end of the cylinder (Fig. 2–43).

7. Remove the pivot pin (Fig. 2–44).

8. Remove the lock nut and bolt at the head end of the cylinder (Fig. 2–45).

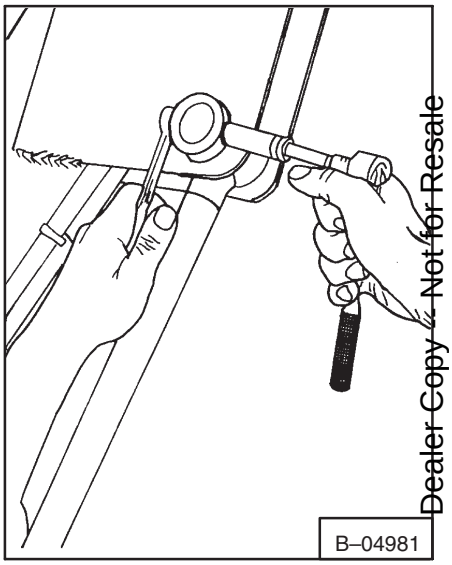

Fig. 2–43 Removing Lockbolt

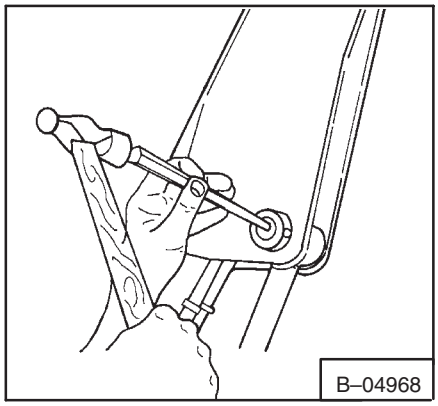

Fig. 2–44 Removing Pivot Pin

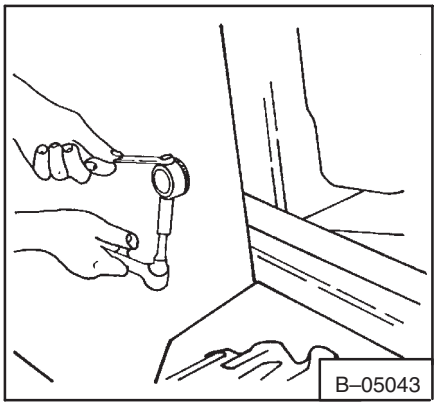

Fig. 2–45 Removing Lockbolt

9. Remove the pivot pin (Fig. 2–46).

10. Remove the lift cylinder from the loader.

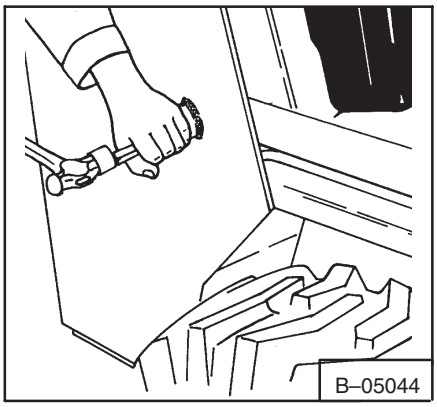

Fig. 2–46 Removing Pivot Pin

2–5.3 Disassembly Of The Cylinder

The tools listed will be needed to do the following procedure:

MEL 1075

1. Put the base end of the cylinder in a drain pan and move the rod in and out to remove the oil from the cylinder.

2. Put the base end of the cylinder in a vise.

3. Remove the end cap from the cylinder with the special tool (Fig. 2–47).

4. Remove the rod with the end cap and piston from the cylinder (Fig. 2–48).

5. Remove the cylinder housing from the vise.

6. Put the rod end in the vise and remove the nut (Fig. 2–49).

7. Remove the piston from the rod (Fig. 2–50).

8. Remove the O–ring (Fig. 2–51).

9. Remove the end cap from the rod (Fig. 2–52).

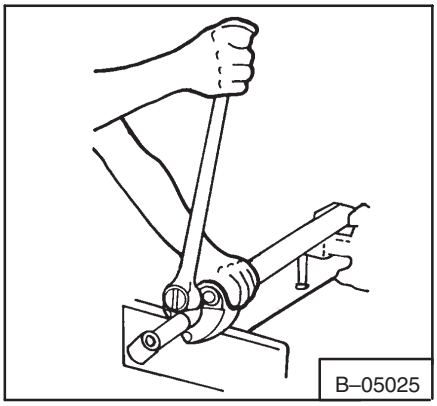

Fig. 2–47 Removing The End Cap

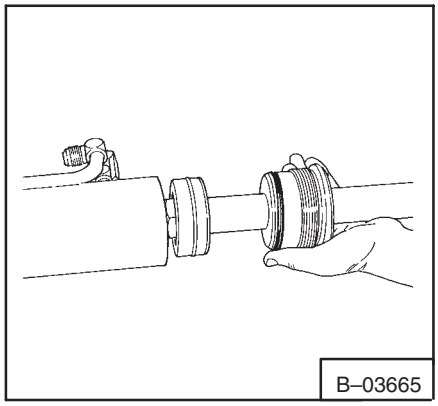

Fig. 2–48 Removing The Piston

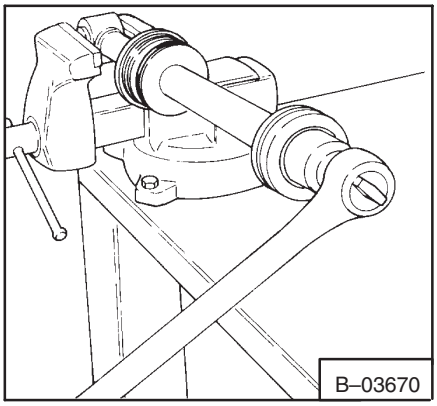

Fig. 2–49 Removing The Nut

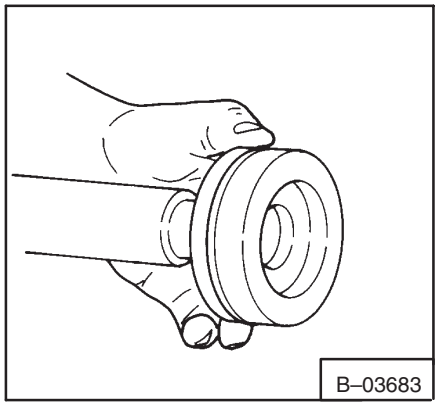

Fig. 2–50 Removing The Piston

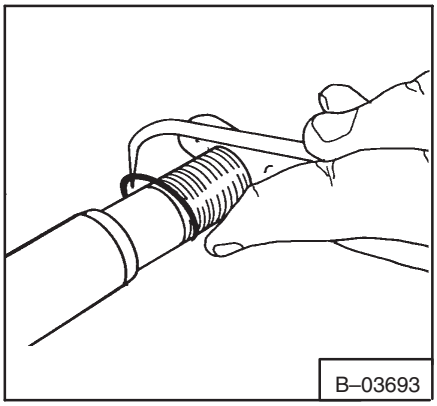

Fig. 2–51 Removing The O–Ring

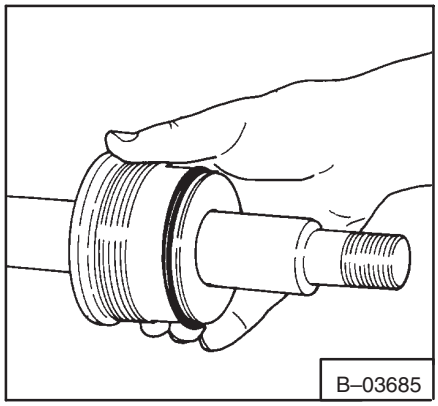

Fig. 2–52 Removing The End Cap

10. Remove the O–ring and back–up washer from the end cap (Fig. 2–53).

11. Remove the wiper seal from the end cap (Fig. 2–54).

12. Remove the oil seal (Fig. 2–55).

13. Remove the teflon seal from the piston (Fig. 2–56).

14. Remove the O–ring from the piston (Fig. 2–57).

15. Wash all parts in solvent. Dry with air only. Destroy old seals and O–rings.

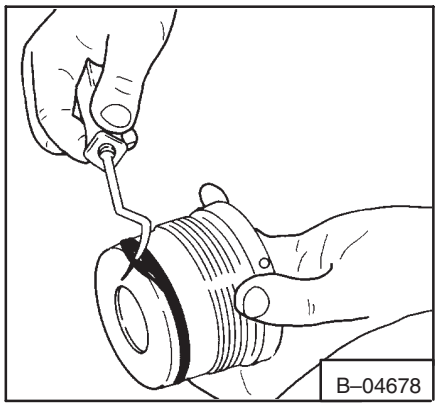

Fig. 2–53 Removing O–Ring

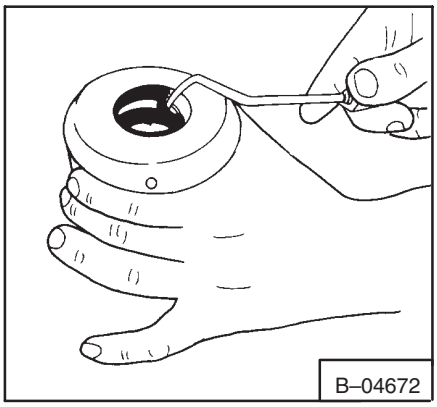

Fig. 2–54 Removing Wiper Seal

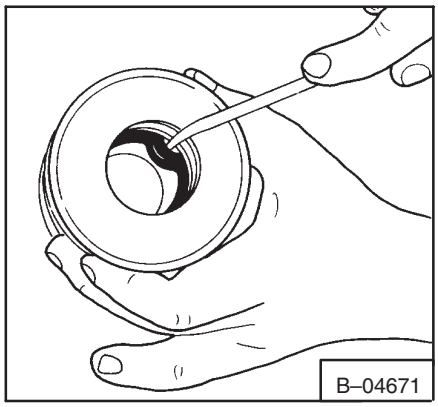

Fig. 2–55 Removing Oil Seal

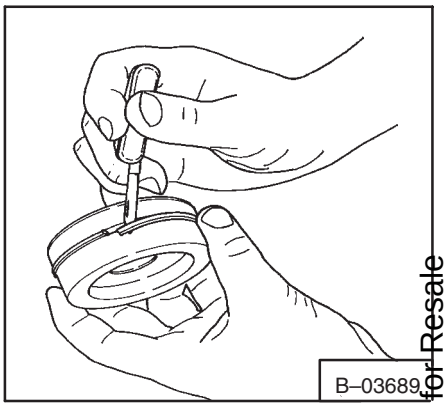

Fig. 2–56 Removing The Teflon Seal

2–5.4 Assembly Of The Lift Cylinder

The tools listed will be needed to do the following procedure:

MEL 1032
MEL 1009

1. Make an inspection of the parts for scratches, nicks, bent rod, etc. Replace as needed.

2. Install the piston over the tool (Fig. 2–58).

3. Install the O–ring on the piston using the tool (Fig. 2–59).

4. Install the teflon seal over the tool and on the piston (Fig. 2–60).

NOTE: To prevent damage to the teflon seal, do not turn it into the piston groove.

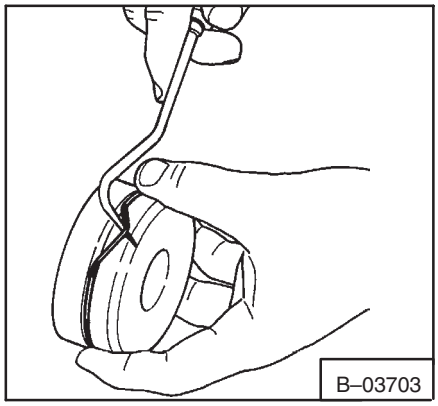

Fig. 2–57 Removing O–Ring

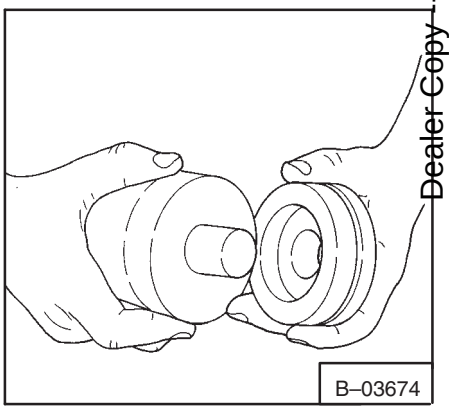

Fig. 2–58 Installing The Piston Tool

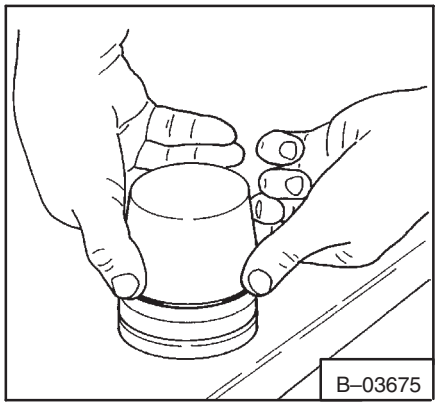

Fig. 2–59 Installing O–Ring

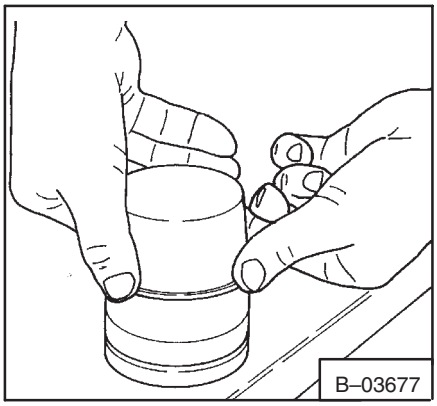

Fig. 2–60 Installing Teflon Seal

5. Install the piston into the tapered end of the tool (Fig. 2–61) to get the teflon seal to the piston size diameter. Leave the piston in the tool for 5 minutes so that the teflon seal will become the correct size.

6. Install the oil seal on the rod seal tool (Fig. 2–62).

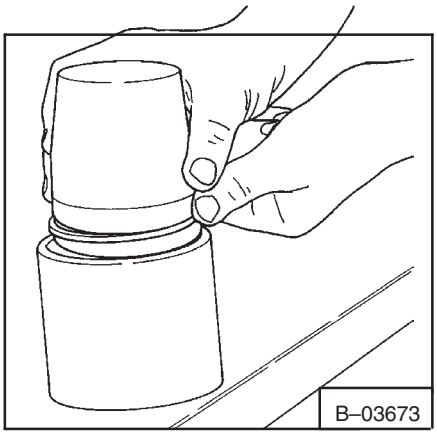

Fig. 2–61 Installing Piston Into Tool

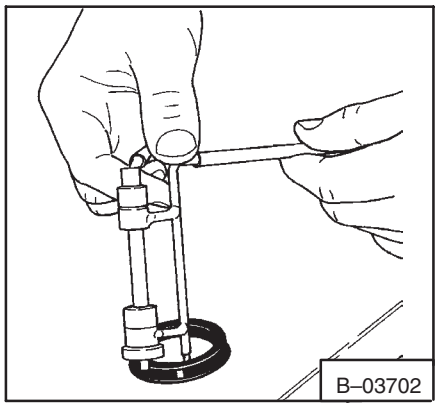

Fig. 2–62 Installing Oil Seal On Tool

NOTE: The O–ring side of the seal goes toward the inside of the cylinder.

7. Install the oil seal in the end cap (Fig. 2–63).

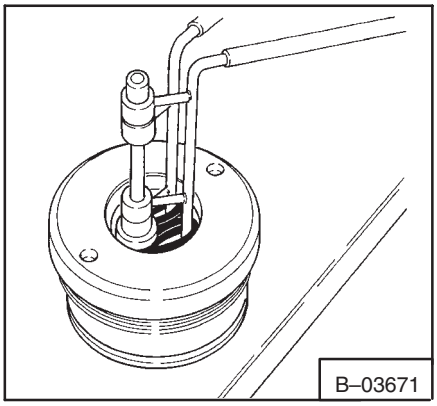

Fig. 2–63 Installing Oil Seal

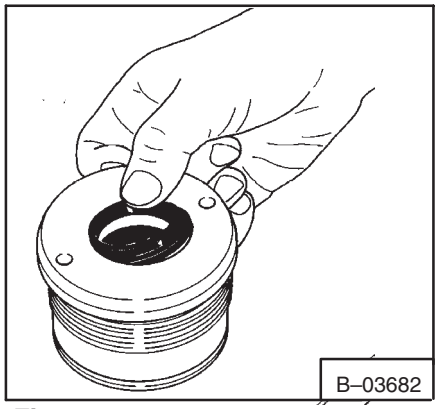

Fig. 2–64 Installing Wiper Seal

8. Install the wiper seal with the lip toward the outside of the end cap (Fig. 2–64).

9. Install the back–up washer (Fig. 2–65).

10. Install the O–ring (Fig. 2–66).

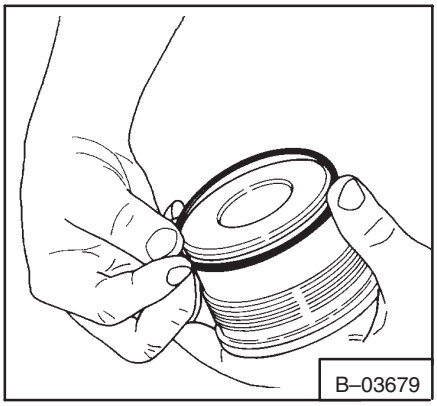

Fig. 2–65 Installing Back–Up Washer

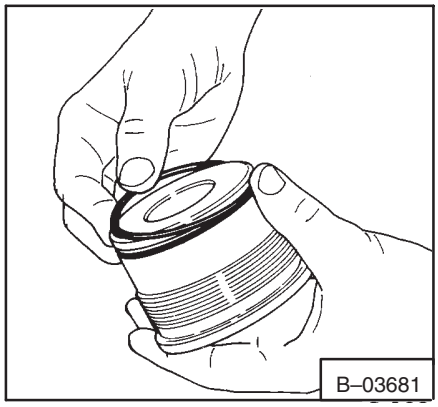

Fig. 2–66 Installing O–Ring

11. Put oil on the wiper seal and oil seal and install the cap on the shaft (Fig. 2–67).

12. Install the O–ring on the shaft (Fig. 2–68).

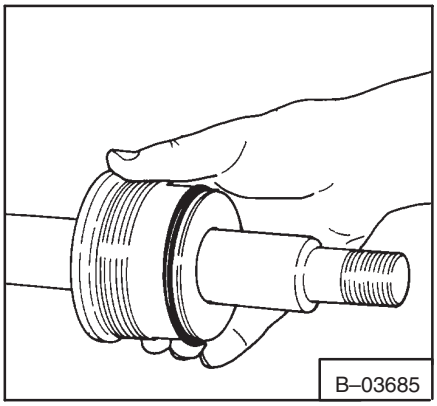

Fig. 2–67 Installing End Cap

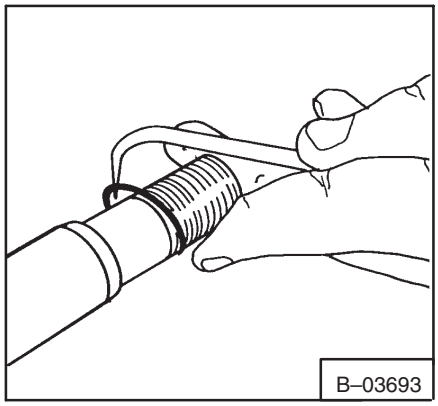

Fig. 2–68 Installing O–Ring

13. Remove the piston from the tool and install on the shaft (Fig. 2–69).

14. Install the nut and tighten to 195–205 ft.–lbs. (264–278 Nm) torque (Fig. 2–70).

15. Put oil on the seals, O–rings and end cap threads (Fig. 2–71).

16. Install the assembly in the cylinder housing (Fig. 2–72).

17. Tighten the end cap with a spanner wrench (Fig. 2–73).

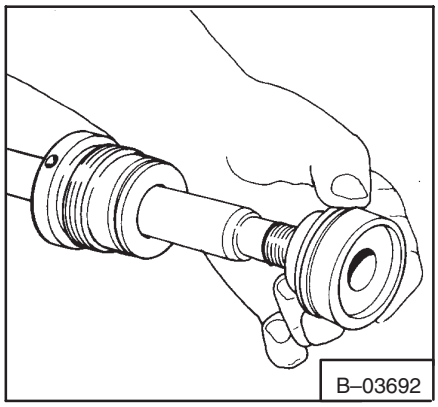

Fig. 2–69 Installing The Piston

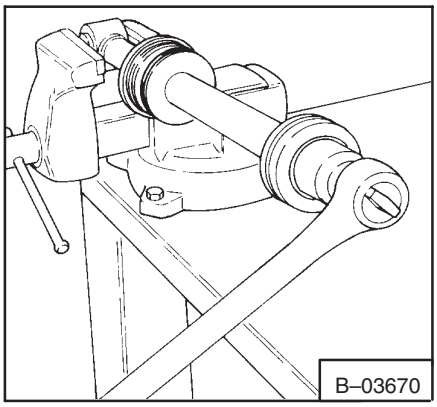

Fig. 2–70 Tightening The Nut

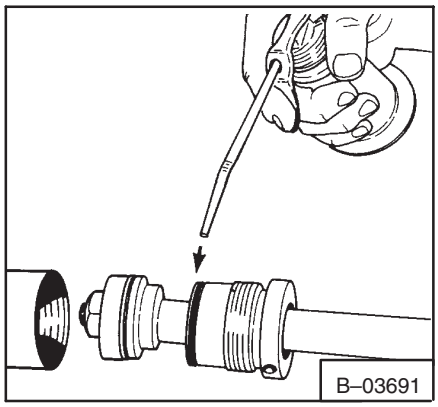

Fig. 2–71 Putting Oil On The Seals

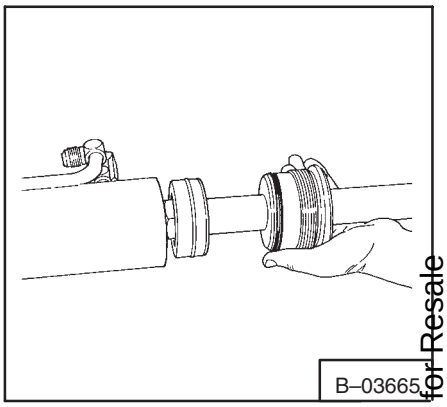

Fig. 2–72 Installing Assembly

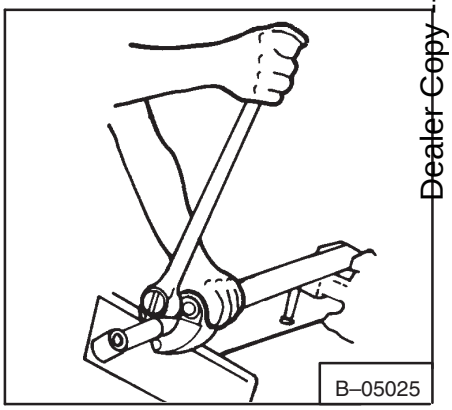

Fig. 2–73 Tightening End Cap

2–5.5 Installation Of The Lift Cylinder(s)

1. Install the lift cylinder in the loader.

2. Connect the hydraulic hoses and tighten (Fig. 2–77).

3. Install the pin in the base end of the lift cylinder (Fig. 2–74).

4. Install the pin in the rod end of the cylinder.

5. Install the bolt and locknut in the rod end pin (Fig. 2–75).

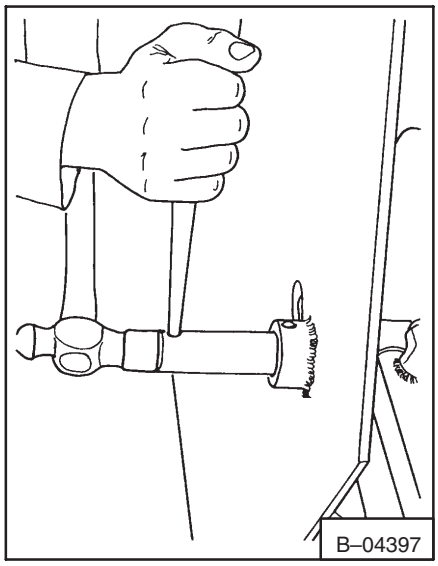

Fig. 2–74 Installing Pin

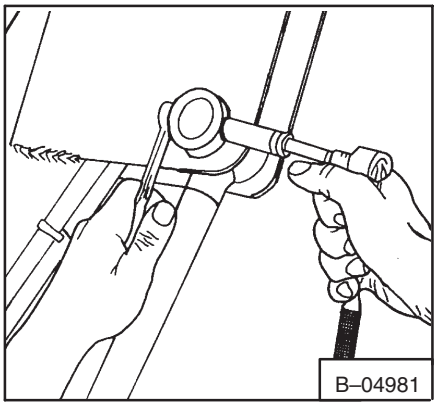

Fig. 2–75 Installing Bolt And Locknut

6. Install the bolt and locknut in the pin in the base end of the cylinder (Fig. 2–76).

7. Close the rear door.

8. Start the engine, operate the lift arms, stop the engine and check for leaks.

9. Check the hydraulic/hydrostatic reservoir. Add fluid as needed.

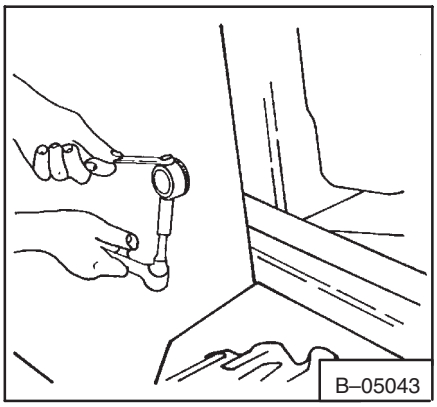

Fig. 2–76 Installing Bolt and Locknut

2–6 TILT CYLINDER

2–6.1 Checking The Tilt Cylinder

1. Remove the attachment, roll Bob–Tach fully backward and stop the engine. Activate the hydraulic controls to release the hydraulic pressure.

⚠ WARNING

Before the cab or the lift arms are raised for service, jackstands must be put under the rear corners of the frame. Failure to use jackstands can allow the machine to tip backward causing injury or death.

W–2014–0895

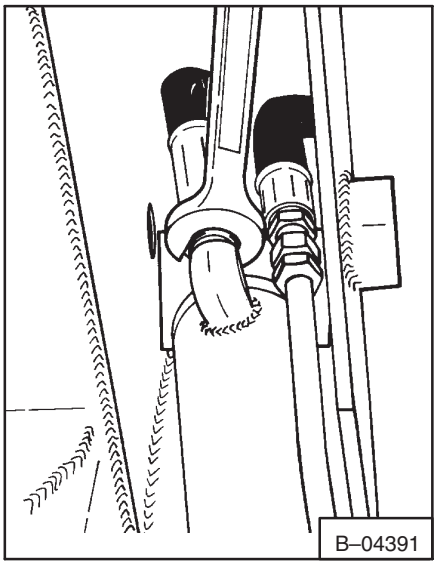

Fig. 2–77 Installing Hoses

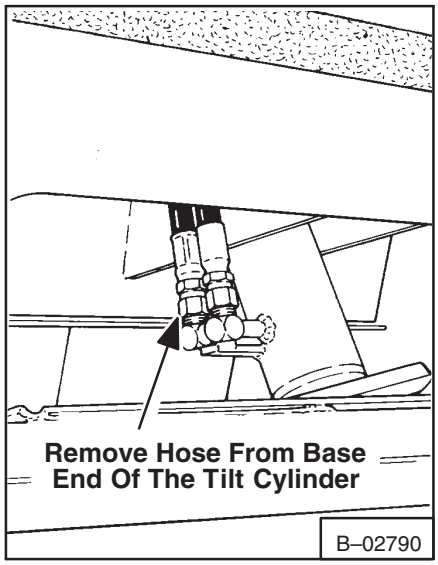

Fig. 2–78 Checking Tilt Cylinder

2. Disconnect and plug the hose that goes to the base end of the tilt cylinder (Fig. 2–78).

3. Start the engine. Push the bottom (heel) of the tilt pedal.

4. If there is leakage from the hose, remove the tilt cylinder for repair (See Paragraph 2–6.2).

5. If there is no leakage, connect the hose and tighten.

6. Remove the jackstands from under the loader frame.

2–6.2 Removing The Tilt Cylinder

1. Remove the bucket attachment. Tilt the bob–Tach fully forward until it is flat on the floor.

2. Stop the engine.

3. Activate the hydraulic controls to release the hydraulic pressure.

4. Remove the locknut and bolt from the pin at the rod end of the cylinder (Fig. 2–79).

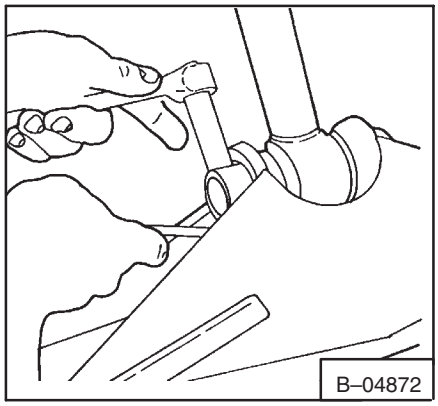

Fig. 2–79 Removing Lockbolt

5. Remove the pin at the rod end (Fig. 2–80).

6. Disconnect the hoses from the tilt cylinder (Fig. 2–81).

7. Remove the locknut and bolt from the base end of the cylinder (Fig. 2–82).

8. Remove the pin at the base end of the cylinder (Fig. 2–83).

9. Remove the cylinder from the lift arms.

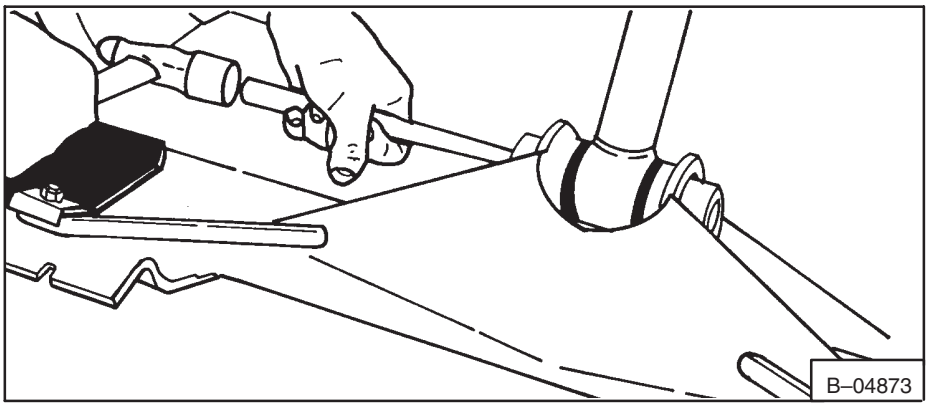

Fig. 2–80 Removing The Pin

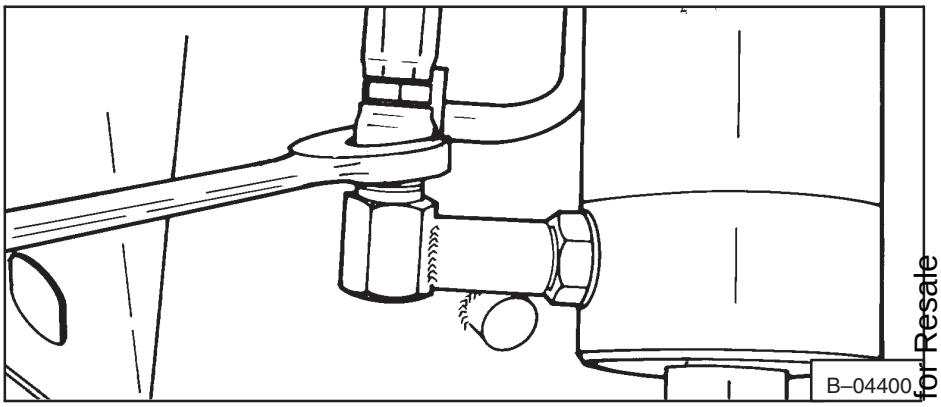

Fig. 2–81 Removing The Hoses

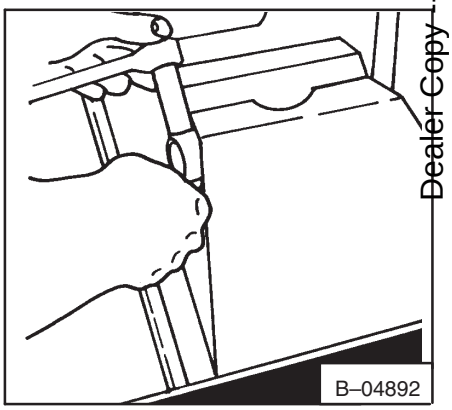

Fig. 2–82 Removing Locknut And Bolt

2–6.3 Disassembly Of The Tilt Cylinder (See Paragraph 2–5.3, Page 2–14)

The tools listed will be needed for the following procedure:

MEL1075

2–6.4 Assembly Of The Tilt Cylinder (See Paragraph 2–5.4, Page 2–15)

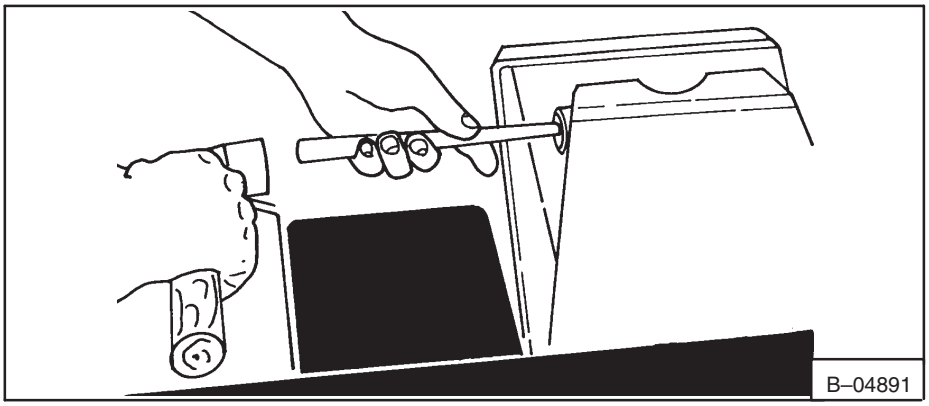

Fig. 2–83 Removing Base End Pin

2–6.5 Installation Of The T ilt Cylinder

1. Install the tilt cylinder in the lift arms.
2. Install the base end pin into the tilt cylinder.
3. Install the bolt and locknut in the base end pin and tighten (Fig. 2–84).
4. Put a floor jack under the Bob–Tach (Fig. 2–85).

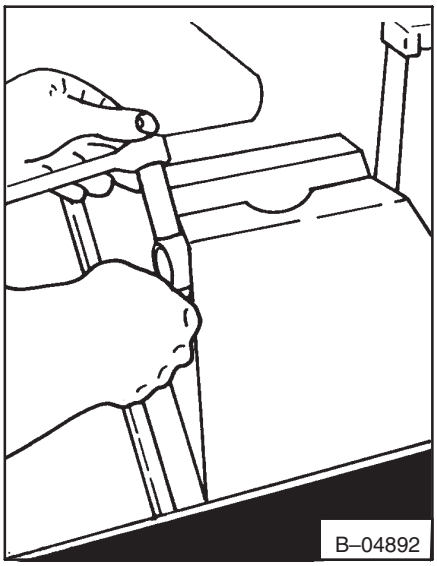

Fig. 2–84 Installing Bolt And Locknut

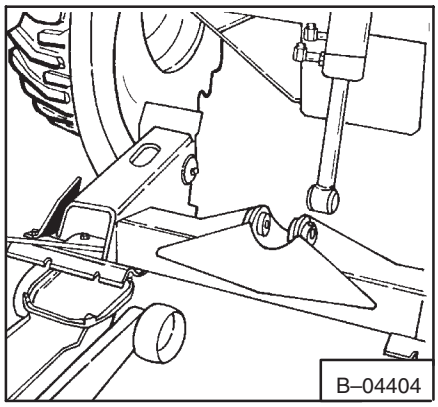

Fig. 2–85 Floor Jack Under Bob–Tach

2–7 HYDRAULIC/HYDROSTATIC RESERVOIR

2–7.1 Removing The Hydraulic/Hydrostatic Reservoir

1. Raise the operator guard (See Paragraph 5–1, Page 5–1).
2. Remove the harness bracket (Fig. 2–86).
3. Drain the hydraulic/hydrostatic reservoir (See Paragraph 1–8.3, Page 1–16).
4. Remove the reservoir hose (Fig. 2–87).
5. Remove the bolt holding the strap in position (Fig. 2–88).
6. Remove the reservoir.

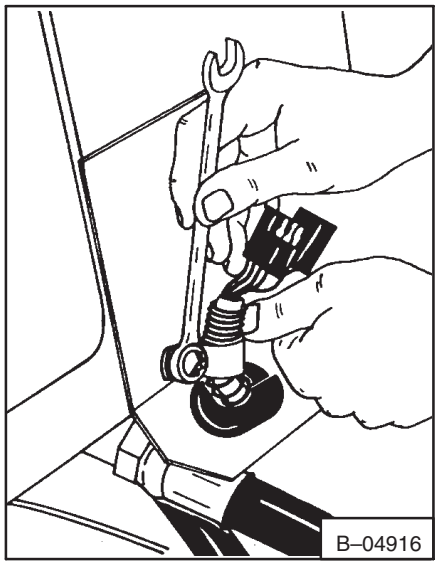

Fig. 2–86 Removing Bracket

2–7.2 Installing The Hydraulic/ Hydrostatic Reservoir

1. Install the reservoir into the correct location.
2. Install the strap and tighten the bolt (Fig. 2–88).
3. Install the reservoir hose (Fig. 2–87).
4. Install the harness bracket (Fig. 2–86).

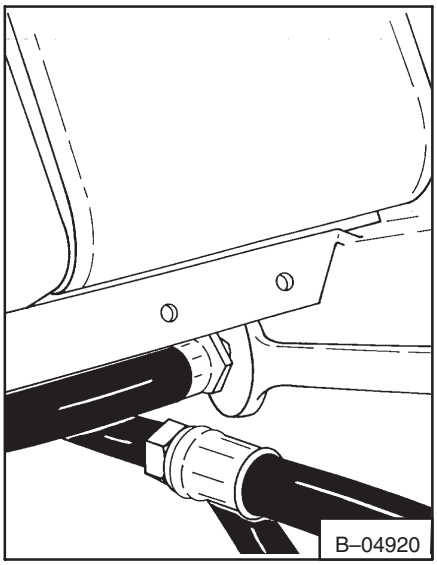

Fig. 2–87 Removing Hose

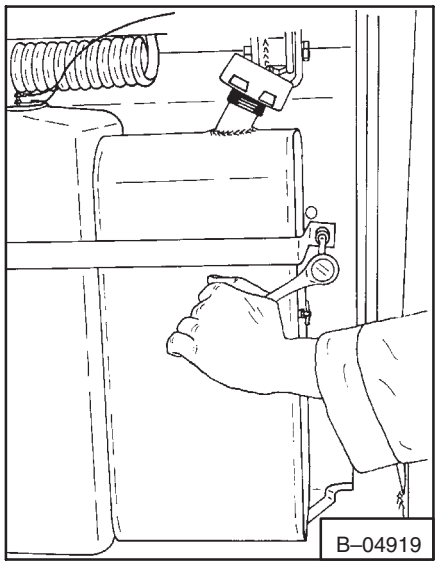

Fig. 2–88 Removing Reservoir

5. Fill the reservoir with the specified oil (See Paragraph 1–8.2, Page 1–15).

6. Lower the operator guard (See Paragraph 5–1, Page 5–1).

7. Start the engine and operate the hydraulic controls. Stop the engine and check for leaks.

8. Check the hydraulic/hydrostatic reservoir oil level and add as needed.

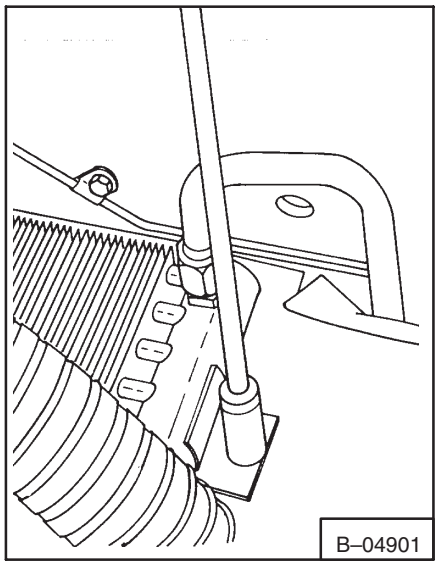

Fig. 2–89 Removing Bolts (641)

2–8 OIL COOLER

2–8.1 Removing The Oil Cooler On The 641

1. Remove the rear grill.

2. Drain the oil from the reservoir (See Paragraph 1–8.3, Page1–16)

3. Remove the oil cooler fastening bolts (Fig. 2–89).

4. Remove the tubelines from the oil cooler (Fig. 2–90).

5. Remove the oil cooler from the machine (Fig. 2–91).

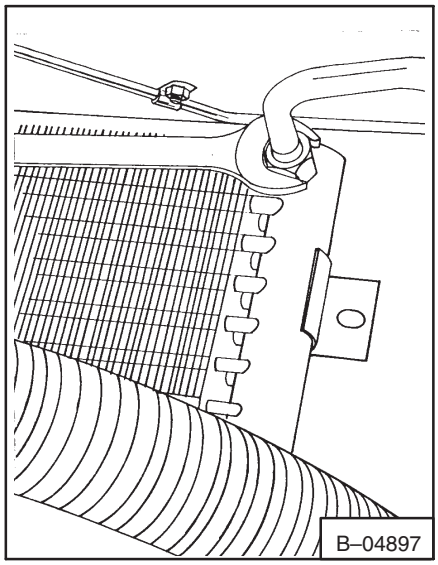

Fig. 2–90 Removing Tubelines (641)

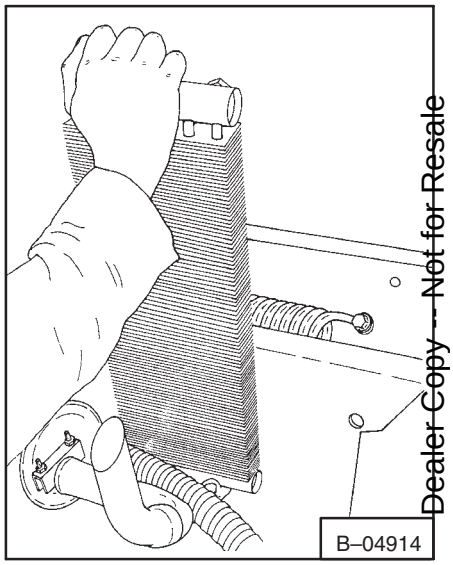

Fig. 2–91 Removing OIl Cooler (641)

2–8.2 Removing The Oil Cooler From The 642 & 643

1. Remove the radiator assembly (642, See Paragraph 7B–41, Page 7B–360) (643, See Paragraph 7C–10, Page 7C–25).

2. Remove the oil cooler from the radiator assembly (Fig. 2–92).

2–8.3 Installing The Oil Cooler

1. Install the oil cooler using the fastening bolts and connecting the tubelines.

2. Connect all other parts that were removed.

3. Fill the reservoir (See Paragraph 1–8.2, Page 1–15).

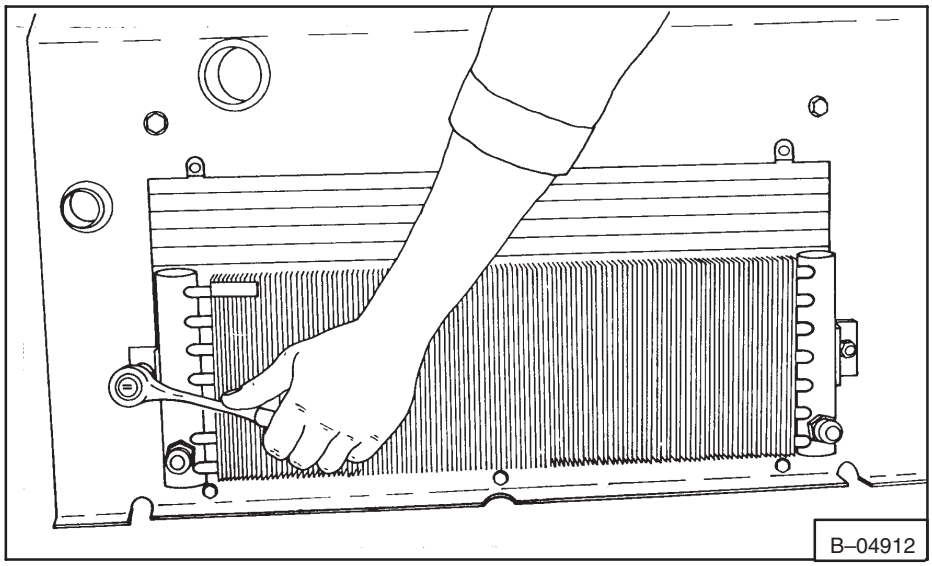

Fig. 2–92 Removing The Oil Cooler (642 & 643)

2–9 10 MICRON FIL TER BY–PASS VALVE

2–9.1 Removing By–Pass Valve

1. Remove the hydraulic filter.
2. Remove the hoses and the tubeline from the filter head.
3. Remove the filter head (Fig. 2–93) from the loader.
4. Put the filter head in a vise.

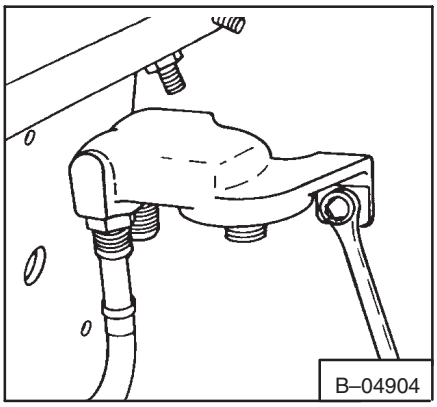

Fig. 2–93 Removing Filter Head

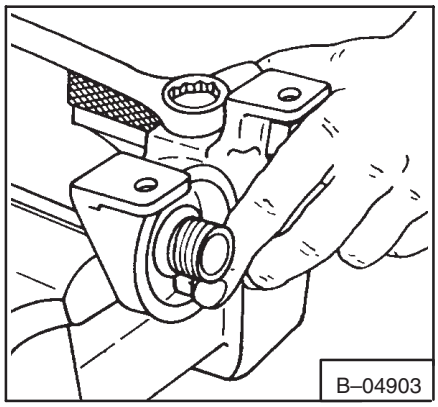

Fig. 2–94 Removing By–Pass Valve

5. Remove the cap (Fig. 2–94) from the filter head.
6. Remove the spring and the poppet (Fig. 2–95).
7. Check the poppet and the seating area for damage. Check the O–ring on the cap for damage.

2–9.2 Installation Of The by–Pass Valve

1. Install the by–pass valve into the filter head and tighten the cap.
2. Install the filter head onto the upright of the loader.
3. Connect the hose and the tubeline to the filter head.
4. Install a new filter onto the filter head.
5. Install any other parts removed.

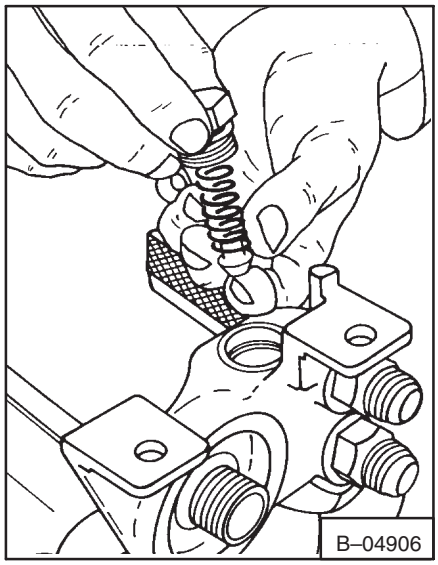

Fig. 2–95 Removing By–Pass Valve

2–10 CONTROL PEDAL, LINKAGE AND LOCKS

2–10.1 Removing Hydraulic Control Pedal

1. Stop the engine and lower the lift arms.

⚠ WARNING

Never work on a machine with the lift arms up unless the lift arms are secured by a lift arm support device. Failure to use an approved lift arm support device can allow the lift arms or attachment to fall and cause injury or death.

W–2059–0991

2. Disconnect the linkage from the pedal (Fig. 2–96).

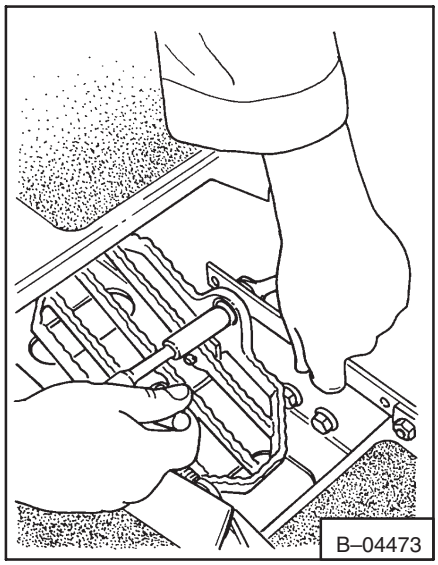

Fig. 2–96 Pedal Linkage

3. Remove the hair pins from the pivot pins (Fig. 2–97).

4. Remove the pedal from the pivot bracket.

5. Remove the bushing from the pedal.

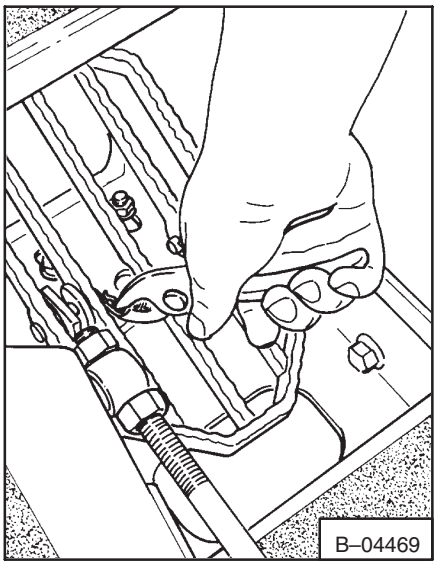

Fig. 2–97 Hair Pin

2–10.2 Installing The Hydraulic Control Pedal

1. Using a vise, install the new bushing in the pedal (Fig. 2–98).

2. Start the pivot pins into the pedal (Fig. 2–99).

3. Put the pedal into the pivot bracket and push the pivot pins into position.

4. Install the hair pins (Fig. 2–97).

5. Connect the linkage at the pedal (Fig. 2–96).

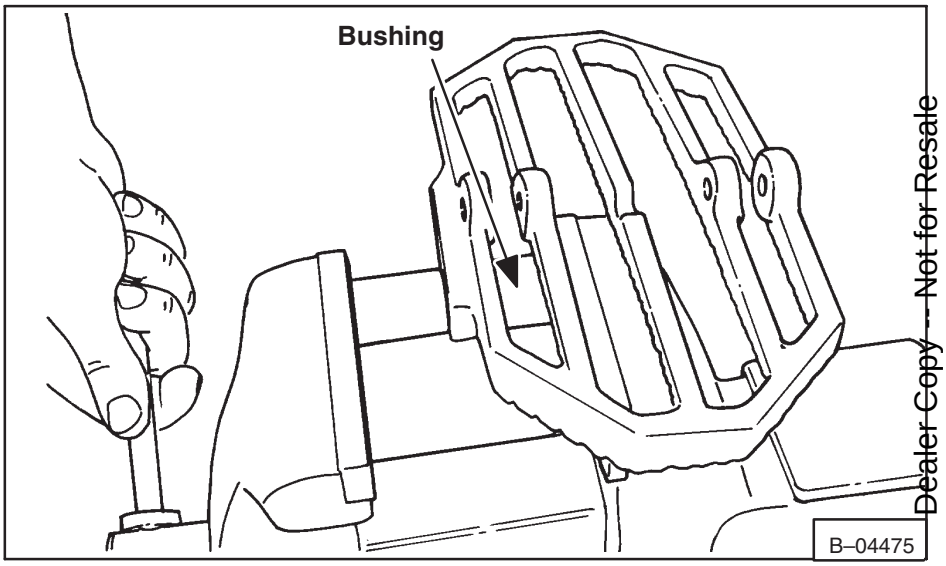

Fig. 2–98 Installing Bushings

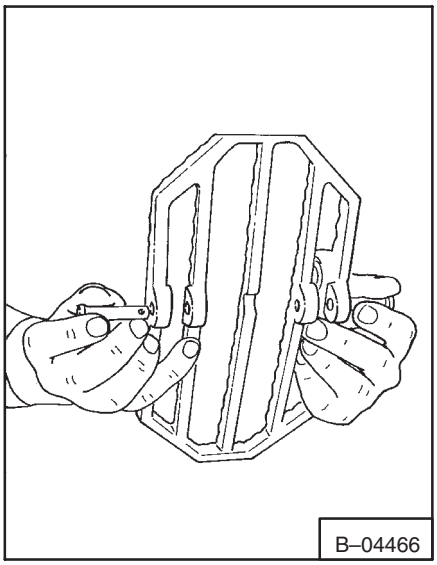

Fig. 2–99 Installing Pivot Pins

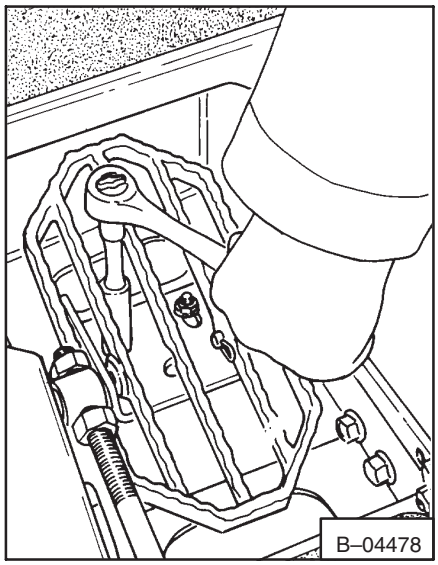

Fig. 2–100 Adjusting Bolts

2–10.3 Adjusting The Hydraulic Control Pedal

Loosen the nuts (Fig. 2–100) and slide the pivot bracket backward or forward until there is 1.500 inches (38 mm) under the rear edge of the pedal (Fig. 2–101). T ighten the nuts to 25–28 ft.–lbs. (34–38 Nm) torque.

2–10.4 Pedal Lock Linkage

If you remove the pedal lock linkage, use the following information for installation:

1. Install the bolts (Fig. 2–102, Item 1) from the outside of the fender.

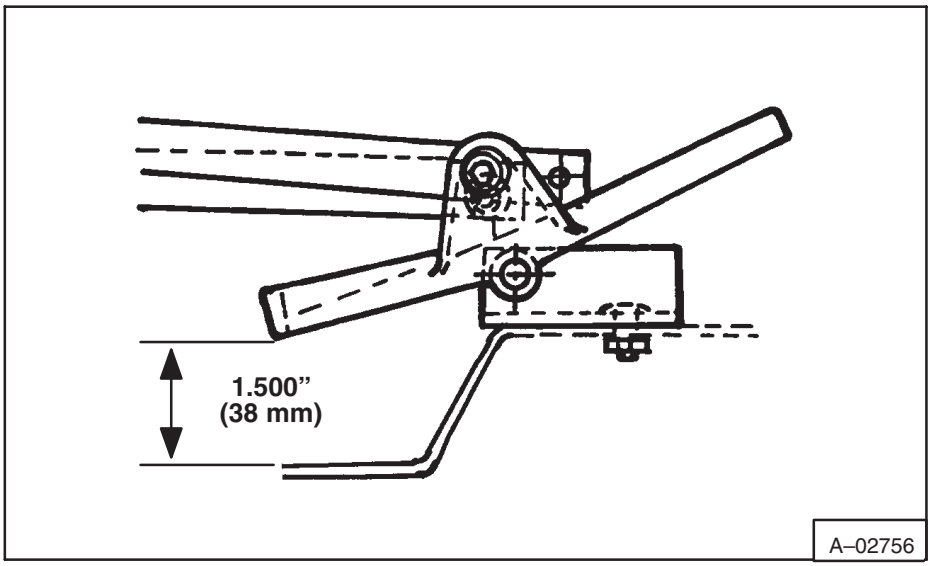

Fig. 2–101 Control Pedal Adjustment

2. Install a plastic washer (Fig. 2–102, Item 2).
3. Install the lock (Fig. 2–102, Item 3).
4. Install a plastic washer (Fig. 2–102, Item 4).
5. Put LOCTITE on the threads of the bolts.

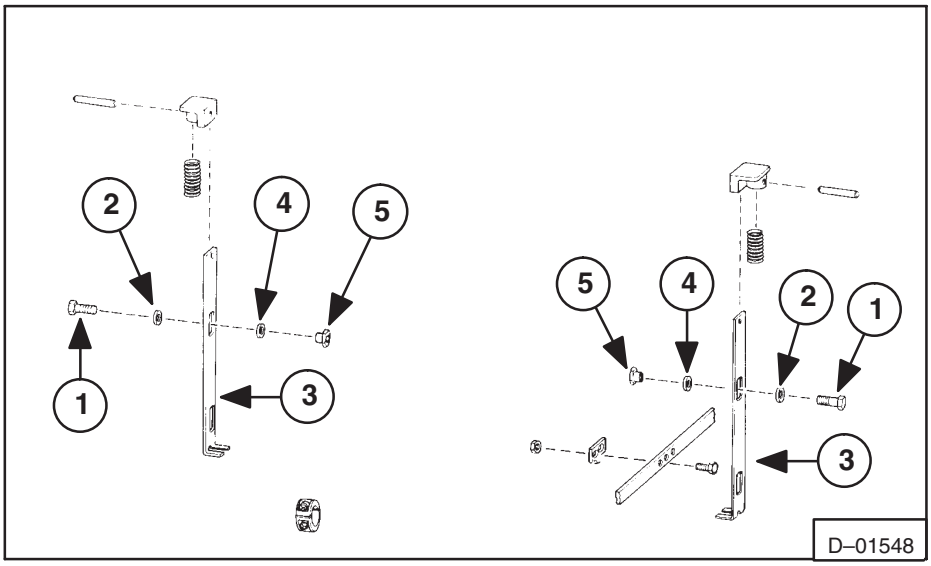

Fig. 2–102 Pedal Lock Linkage

6. Install the special nuts (Fig. 2–102, Item 5). Make sure the special nut goes tight against the fender and that the plastic washers (Fig. 2–102, Items 2 & 4) go over the shoulder of the special nut.
7. Tighten the special nut to 25 ft.–lbs. (34 Nm) torque.
8. Loosen the nuts on the tab (Fig. 2–103, Item 1). Put the pedal in the neutral position and tighten the nuts to 25 ft.–lbs. (34 Nm) torque.

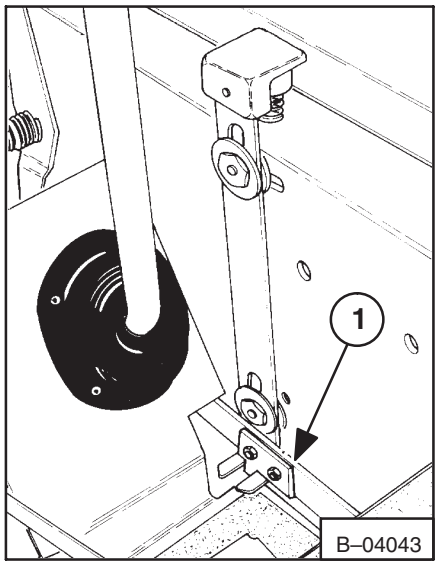

Fig. 2–103 Pedal Lock

HYDROSTATIC SYSTEM

WARNING

Instructions are necessary before operating or servicing machine. Read Operation & Maintenance Manual, and signs (decals) on machine. Follow warnings and instructions in the manuals when making repairs, adjustments or servicing. Check for correct function after adjustments. repairs or service. Failure to follow instructions can cause injury or death.

W–2144–0189

bobcat®

3 HYDRAULIC SYSTEM

3–1 Troubleshooting

The following troubleshooting chart is provided as an assistance in locating and correcting problems which are most common. Many of the recommended procedures must be done by authorized Bobcat Service Personnel only.

PROBLEM	CAUSE
No drive on one side, in one direction.	1, 2, 3, 4, 5
No drive on one side in both directions.	2, 3, 5, 6, 7, 8
The loader does not move in a straight line.	2, 3, 4, 6, 8, 9, 10
The hydrostatic system is overheating.	4, 11, 12, 13, 14, 15
The warning light comes ON (Low charge pressure).	15, 16, 17, 18

KEY TO CORRECT THE CAUSE

1. The hydrostatic system has a fluid leak.
2. The steering linkage needs adjustment.
3. The high pressure replenishing valve(s) are damaged.
4. The shuttle valve in the hydrostatic motor is not working correctly.
5. The balance plate seals in the hydrostatic motor are damaged.
6. The hydrostatic pumps have damage.
7. The final drive chain is broken.
8. The hydrostatic motor has damage.
9. The tires do not have the correct tire pressure.
10. The tires are not the same size.
11. The hydrostatic fluid is not at the correct level.
12. The oil cooler has a restriction.
13. The temperature sending switch is not operating correctly.
14. The control valve is not operating correctly.
15. The loader is not being operated at the correct RPM.
16. The sender is defective.
17. Pump is defective or worn hydrostatics.
18. 40 micron filter is plugged.

3–2 HYDROSTATIC SYSTEM INFORMATION

IMPORTANT

When repairing hydrostatic and hydraulic systems, clean the work area before disassembly and keep all parts clean. Always use caps and plugs on hoses, tubelines and ports to keep dirt out. Dirt can quickly damage the system.

I–2003–0888

3–2.1 Function Of High Pressure Relief Replenishing Valves

The replenishing valves for forward movement are different from the replenishing valves for reverse movement.

The replenishing valves for forward movement also release very high pressure. See function 3 below.

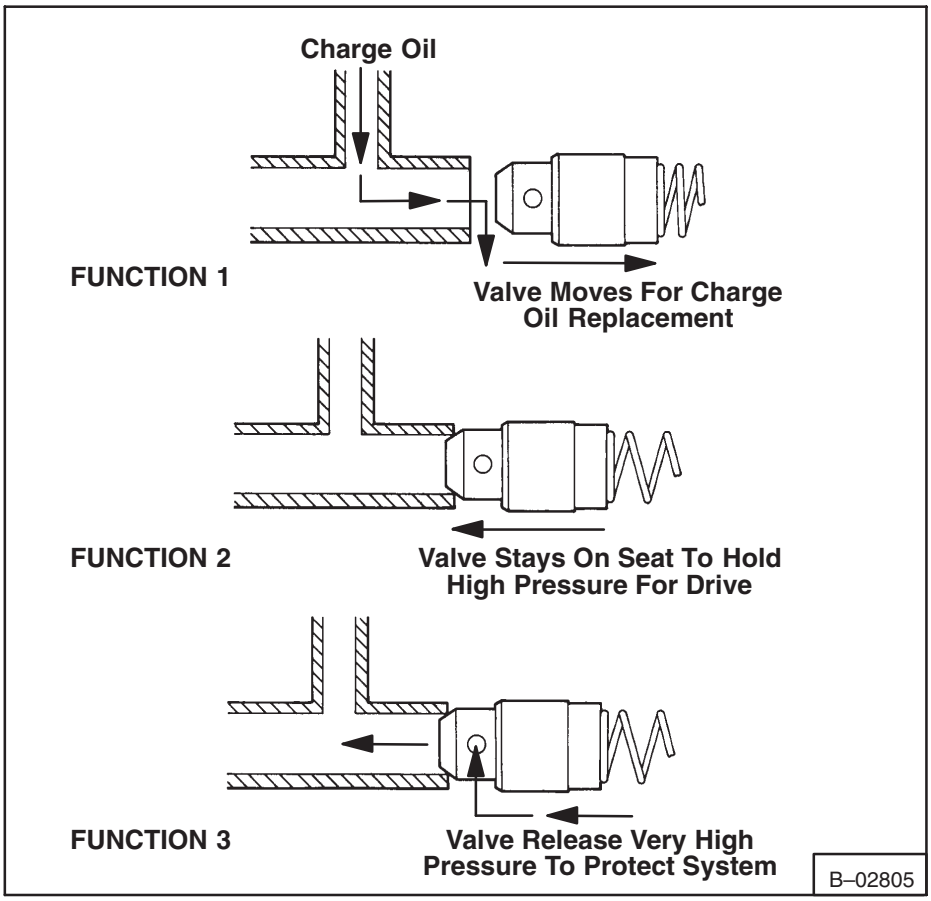

Fig. 3–1 Replenishing Valves (Forward)

The function of the replenishing valves are:

1. To give replacement oil to the low pressure side of the closed hydrostatic circuit. Replacement oil is needed because of normal inside leakage and the controlled flow to the oil cooler for cooling purposes (Fig. 3–1, Function 1 & Fig. 3–2, Function 1).

2. To keep high pressure flow of oil out of the low pressure side of the closed hydrostatic circuit (Fig. 3–1, Function 2 & Fig3–2, Function 2).

3. To release high pressure caused by a heavy load of the machine when moving forward (Fig. 3–1, Function 3).

See Paragraph 3–7.1, Page 3–21 Checking The Replenishing Valves.

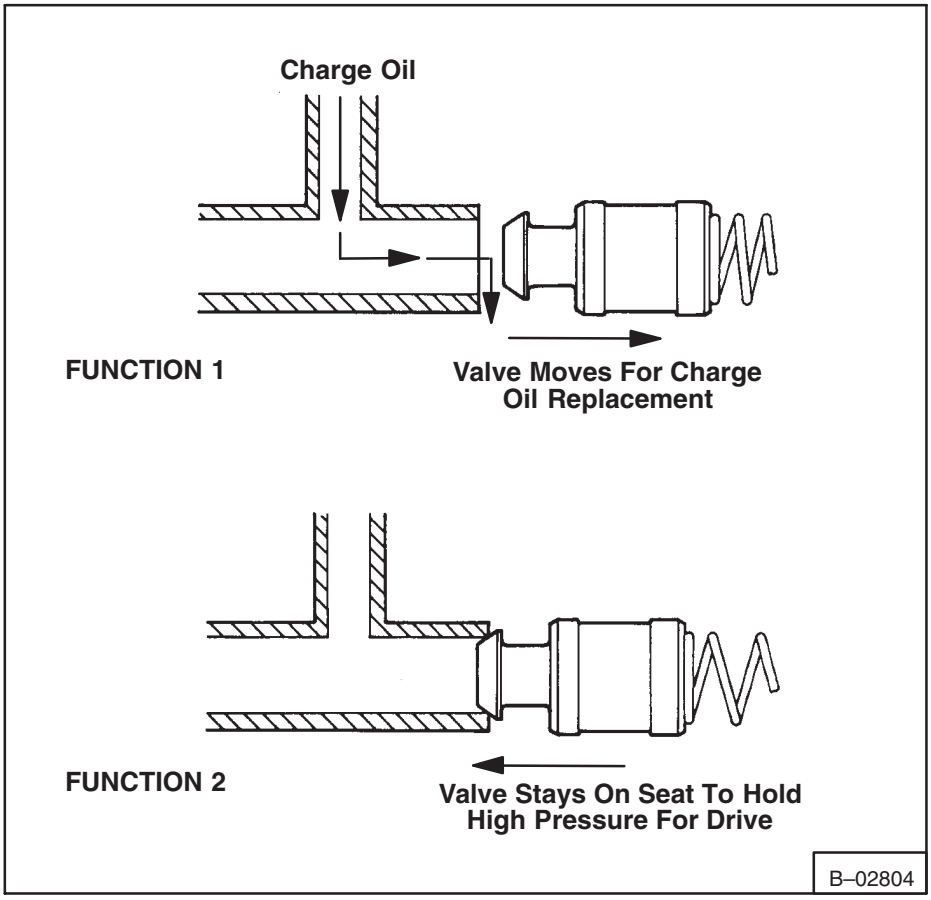

Fig.3–2 Replenishing Valves (Reverse)

3–3 STEERING LEVERS

3–3.1 Removing The Steering Levers

1. Stop the engine.

2. Raise the operator guard (See Paragraph 5–1, Page 5–1).

Fig. 3–3 Removing Front Panel

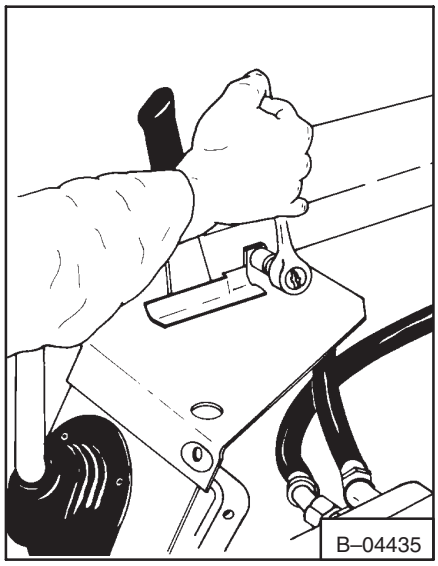

Fig. 3–4 Removing Side Shield

3. Remove the front panel (Fig. 3–3).

4. Remove the bolts and remove the side shields (Fig. 3–4) on both sides of the loader.

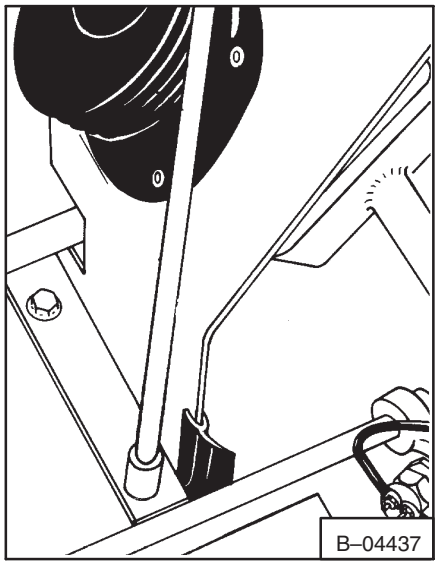

Fig. 3–5 Steering Lever Shields

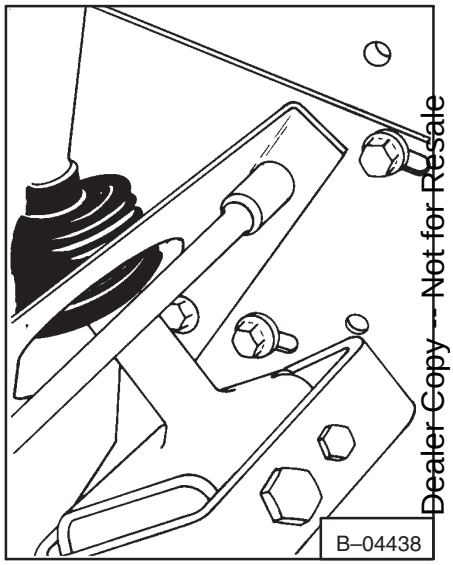

Fig. 3–6 Steering Lever Shields

5. Remove the bolts from the steering lever shields (Fig. 3–5 & 3–6).

6. Remove the steering linkage at the steering levers (Fig. 3–7).

7. Disconnect the auxiliary linkage (Fig. 3–8) from the right steering lever.

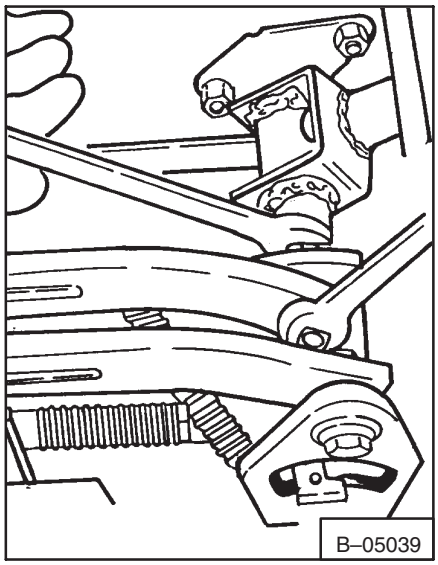

Fig. 3–7 Removing Steering Bar Bolts

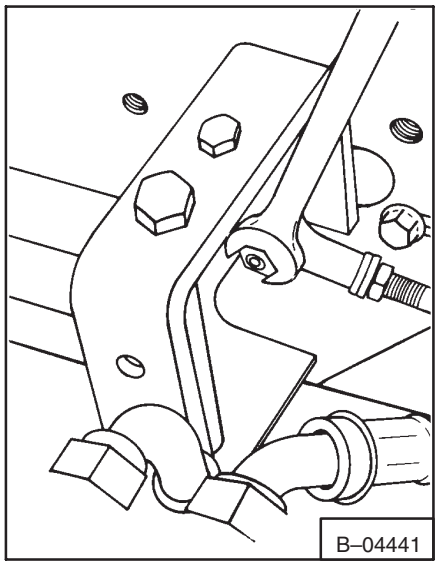

Fig. 3–8 Auxiliary LInkage

8. Remove the bolts from the pivot bearings (Fig. 3–9, Item 1).

9. Remove the steering lever assembly (Fig. 3–10).

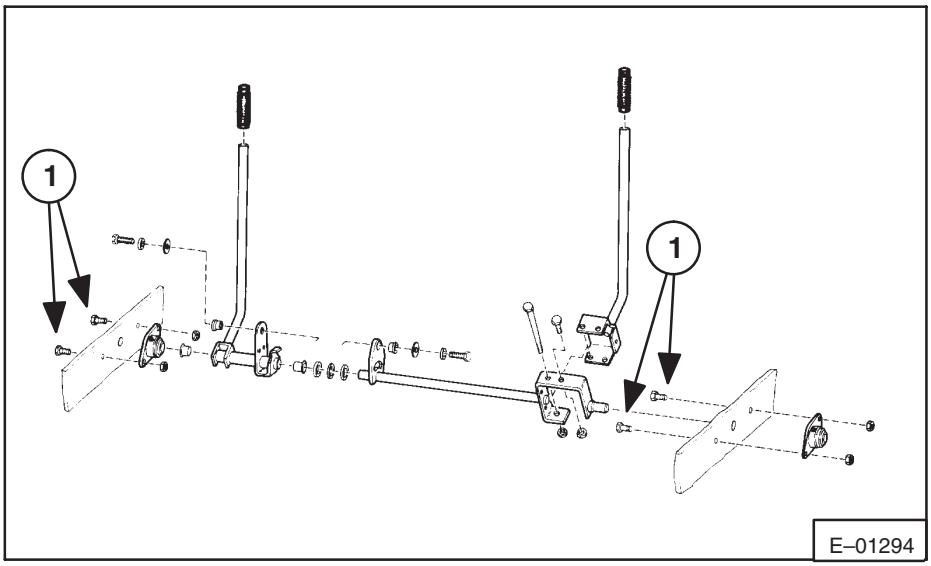

Fig. 3–9 Pivot Bolts

3–3.2 Repairing The Steering Levers

1. Remove the rubber bushings and Teflon bushings from the steering levers.

2. Install new rubber bushings into the steering levers using two sockets and a vise (Fig. 3–11).

3. Install new Teflon bushings on the steering levers (Fig. 3–12).

4. Install the two steering lever assemblies together (Fig. 3–13).

5. Check the pivot bearings and replace as needed.

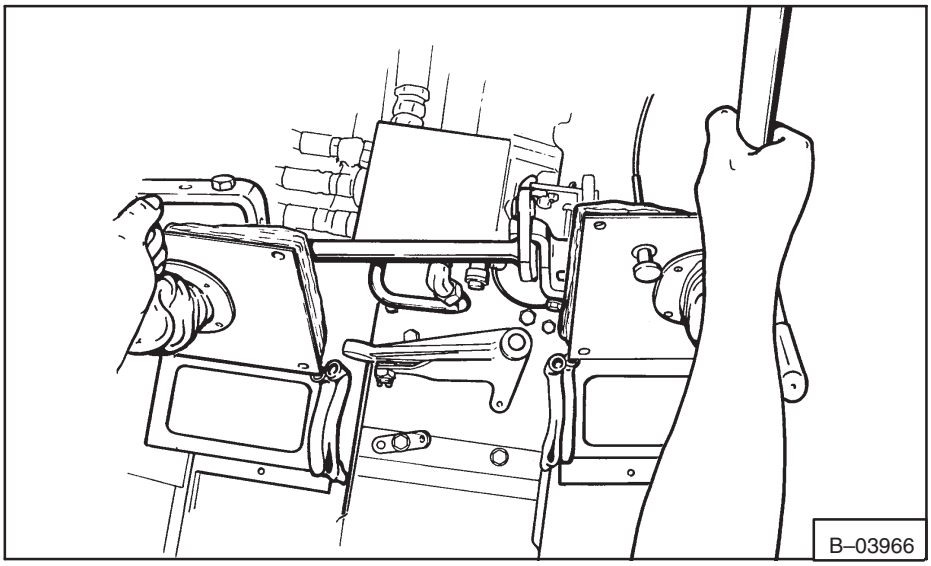

Fig. 3–10 Steering Levers

3–3.1 Installing The Steering Levers

1. Install the steering lever assembly into the loader (Fig. 3–10).

2. Install the bolts and nuts in the pivot bearings (both sides) and tighten 25–28 ft.–lbs. (34–38 Nm) torque.

3. Install the steering linkage (Fig. 3–7).

4. Connect the auxiliary linkage at the right steering lever (Fig. 3–8).

5. Install the bolts in the steering lever shields (Fig. 3–5 & 3–6) and tighten.

6. Install the side shields and bolts and tighten (Fig. 3–4).

7. Install the center shield and tighten the bolts (Fig. 3–3).

8. Adjust the steering linkage (See Section 3–4.1, Page 3–5).

9. Lower the operator guard (See Paragraph 5–1, Page 5–1).

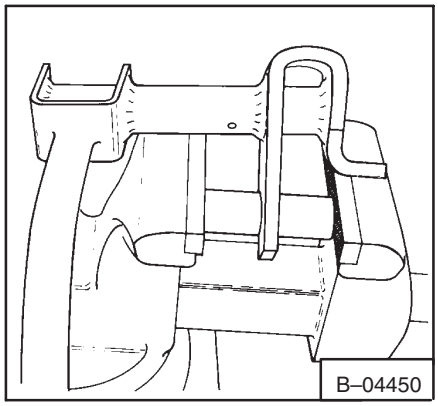

Fig. 3–11 Installing Bushings

3–4 STEERING LINKAGE

3–4.1 Adjustment Of The Steering Linkage (Fig. 3–14)

WARNING

Put jackstands under the front axles and rear corners of the frame before running the engine for service. Failure to use jackstands can allow the machine to fall or move and cause injury or death.

W–2017–0286

1. Raise the operator guard (See Paragraph 5–1, Page 5–1).

2. Check the length of the centering spring (Fig. 3–14). Adjust the center bolt as needed. Loosen the linkage bolts at the pintle arms and at the steering levers.

3. Loosen the pintle bar bolts.

4. Start the engine and run at half throttle.

5. Move the left steering lever until the wheels do not turn (neutral). Adjust the rear pintle bar so that the bar is tight against both cams of the pintle lever andthe transmission is still in neutral. Tighten the bottom bolt first 28 ft.–lbs. (38 Nm) torque. Then tighten the top bolt 28 ft.–lbs. (38 Nm) torque.

6. Move the steering leverforward and backward and let the transmission return to neutral position. If the transmission does not return to neutral, make the adjustment again. There must not be any space between the bar and the cams on the pintle lever.

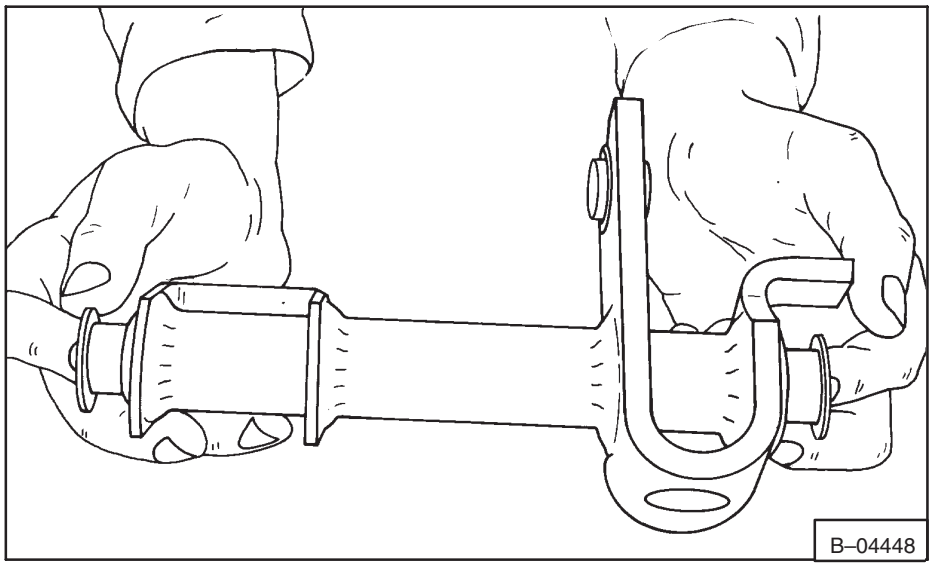

Fig. 3–12 Installing Teflon Bushings

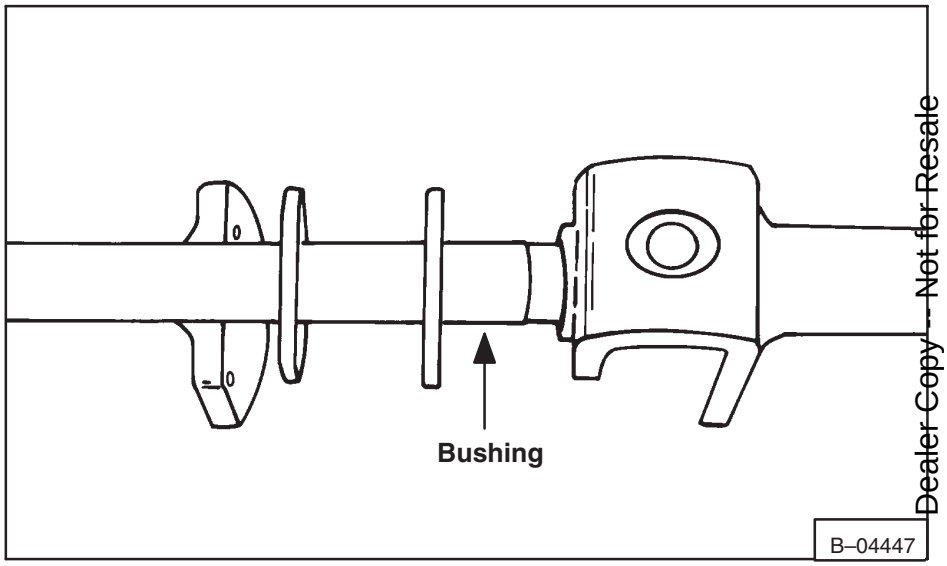

Fig. 3–13 Installing Steering Lever Assembly

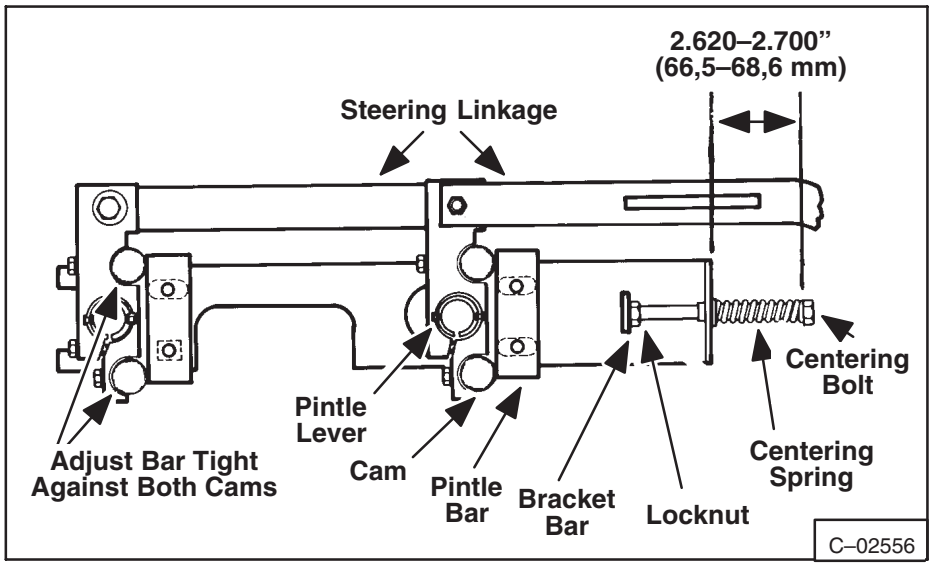

Fig. 3–14 Steering Adjustment

7. Repeat steps 5 and 6 for the right steering lever.

8. Move both steering levers forward and backward to make sure the linkage adjustment is correct.

9. Stop the engine.

10. Tighten the bolts that hold the steering linkages to the pintle levers to 12 ft.–lbs. (16 Nm) torque. Hold the bolts with a wrench and install the locknuts on each bolt and tighten 23 ft.–lbs. (31 Nm) torque.

11. Lower the operator guard (See Paragraph 5–1, Page 5–1).

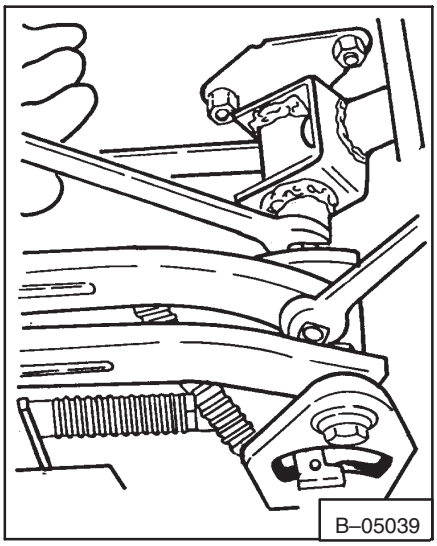

Fig. 3–15 Removing Steering Linkage Bolts

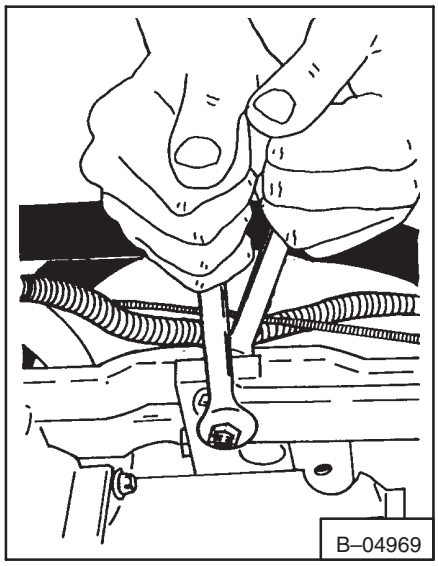

Fig. 3–16 Removing Linkage Bolts

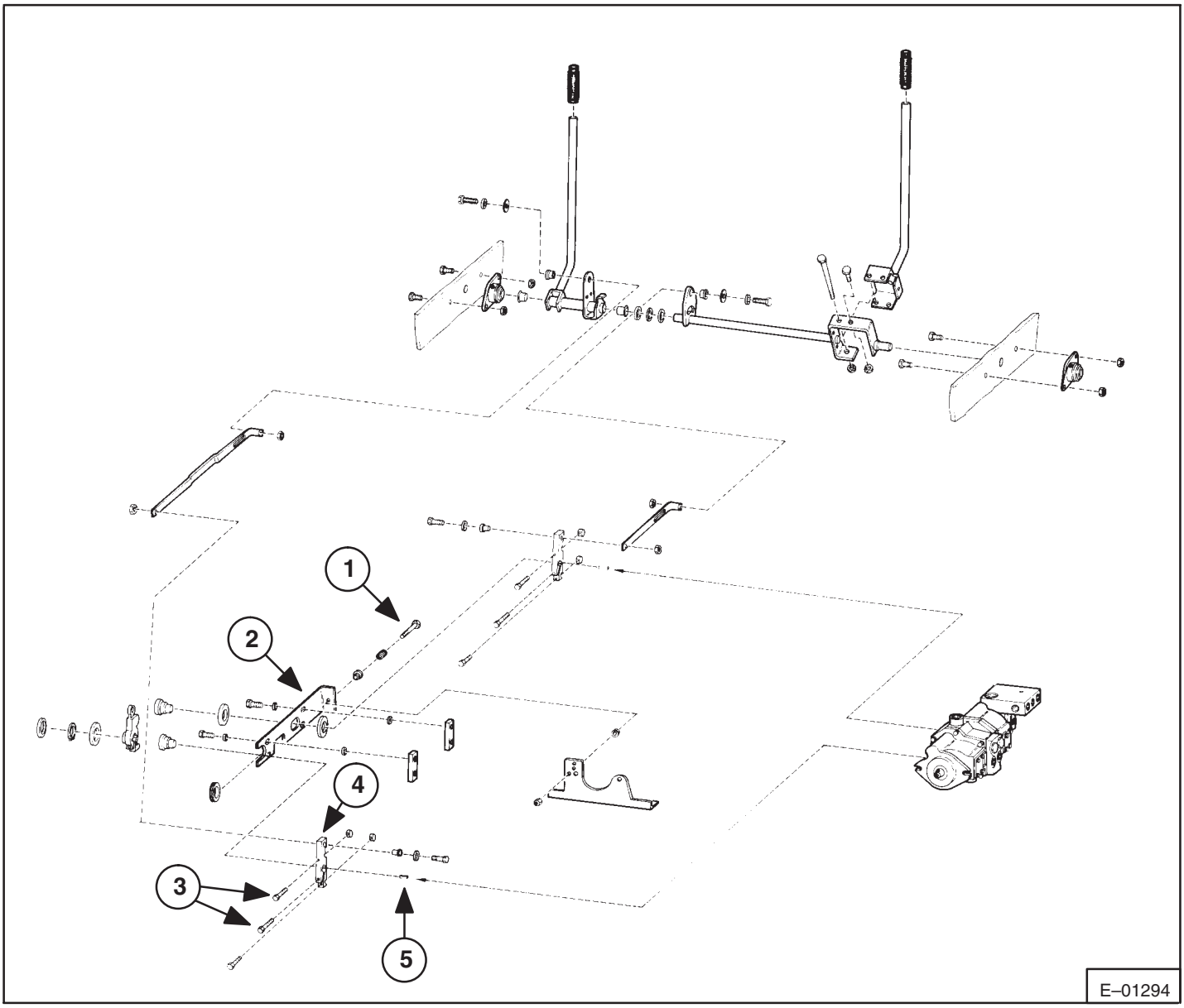

Fig. 3–17 Steering Assembly

3–4.2 Removing The Steering Linkage

WARNING

Before the cab or the lift arms are raised for service, jackstands must be put under the rear corners of the frame. Failure to use jackstands can allow the machine to tip backward causing injury or death.

W–2014–0895

Put jackstands under the front axles and rear corners of the frame before running the engine for service. Failure to use jackstands can allow the machine to fall or move and cause injury or death.

W–2017–0286

1. Raise the operator cab (See Paragraph 5–1, Page 5–1).
2. Remove the steering linkage bolts (Fig. 3–15) from the steering levers.
3. Remove the bolts from the pintle arms (Fig. 3–16).
4. Remove the centering bolts (Fig. 3–17, Item 1) and the spring assembly.
5. Remove the centering bar (Fig. 3–17, Item 2).
6. Loosen the bolts (Fig. 3–17, Item 3) on the pintle levers (Fig. 3–17, Item 4). Remove the pintle lever key (Fig. 3–17, Item 5).

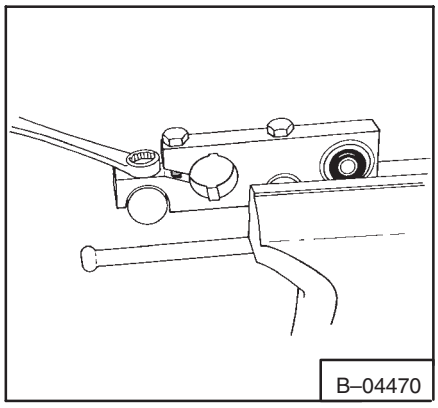

Fig. 3–18 Pintle Lever Lobes

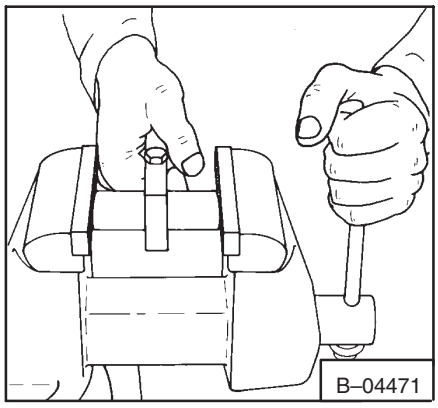

Fig. 3–19 Installing Bushings

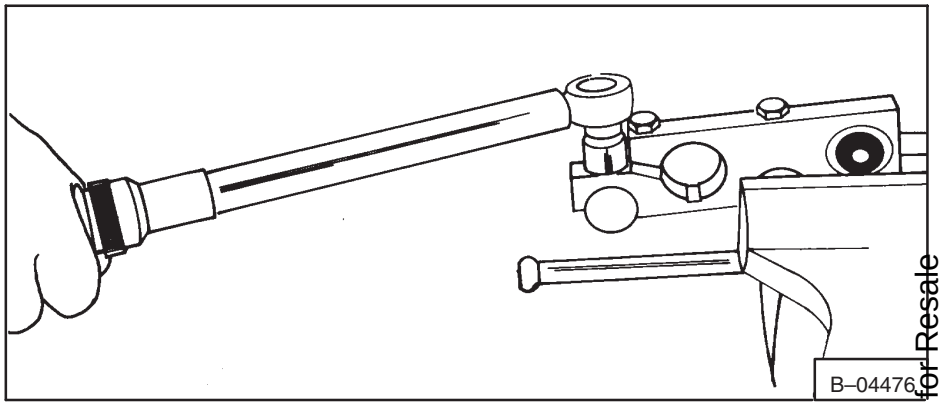

Fig. 3–20 Tightening Pintle Lever Lobes

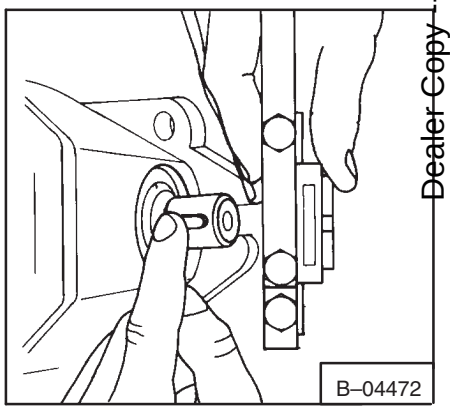

Fig. 3–21 Installing Pintle Key

3–4.3 Repairing The Pintle Lever

1. Remove the lobes from the pintle lever (Fig. 3–18).
2. Remove the rubber bushings from the pintle levers.
3. Install the new rubber bushing using two sockets and a vise (Fig. 3–19).
4. Install the new lobes on the pintle lever and tighten 25–28 ft.–lbs (34–38 Nm) torque (Fig. 3–20).
5. Install the key on the shaft of the hydrostatic pump (Fig. 3–21) and install the pintle lever assembly.

NOTE: There must be enough clearance between the pintle lever and the bolt head for correct operation of the lever.

6. Tighten the bolt on the pintle lever 18–20 ft.–lbs. (24–27 Nm) torque (Fig. 3–22).

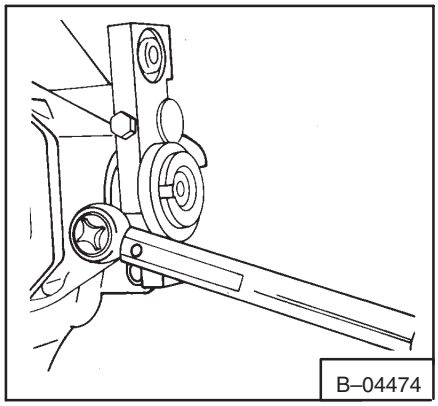

Fig. 3–22 Tightening Pintle Lever Bolts

3–4.4 Installing The Steering Linkage

1. Install the centering bar (Fig. 3–17, Item 2).

2. Move the centering bar forward until the centering bar can be installed on the rear Teflon guide.

3. Install the centering bolt (Fig. 3–17, Item 1) and the spring assembly.

4. Install the steering linkage at the pintle levers and steering levers. Install the bolts, washers and new locknuts. DO NOT tighten them until after the steering linkage is adjusted.

5. Adjust the steering linkage(See Paragraph 3–4.1, Page 3–5).

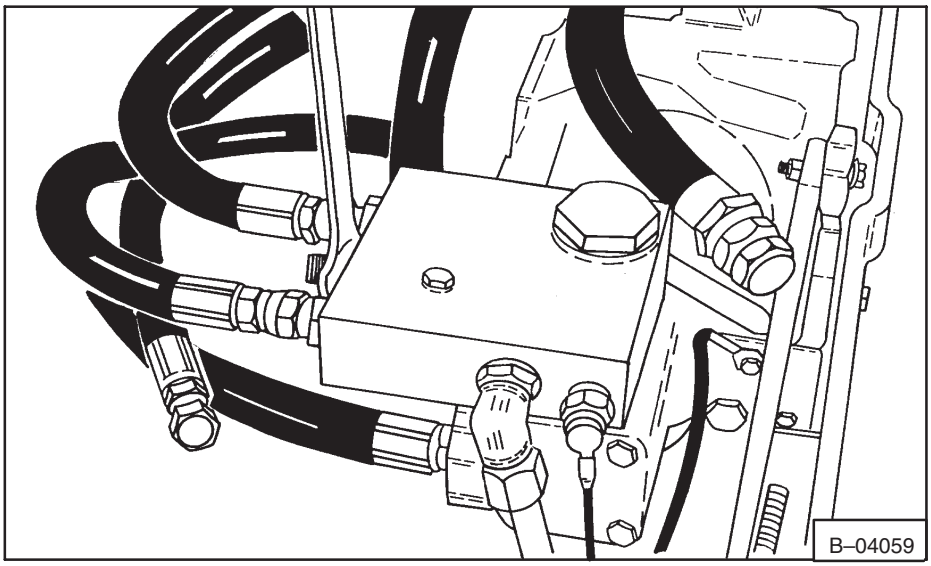

Fig. 3–23 Micron Fitting

3–5 PORT BLOCK

3–5.1 40 Micron Filter

Replace the bronze (40 micron) filter every 500 hours of loader operation, using the following procedure:

The tools listed will be needed to do the following procedure:

MEL1177 – Filter Removal Tool

1. Stop the engine. Drain the hydraulic/hydrostatic reservoir.

2. Raise the operator cab (See Paragraph 5–1, Page 5–1).

3. Clean the area around the port block on the hydraulic pump.

4. Remove the center hose (Fig. 3–23) and the fitting (Fig. 3–24) from the port block.

5. Install the special tool on the filter (Fig. 3–24a).

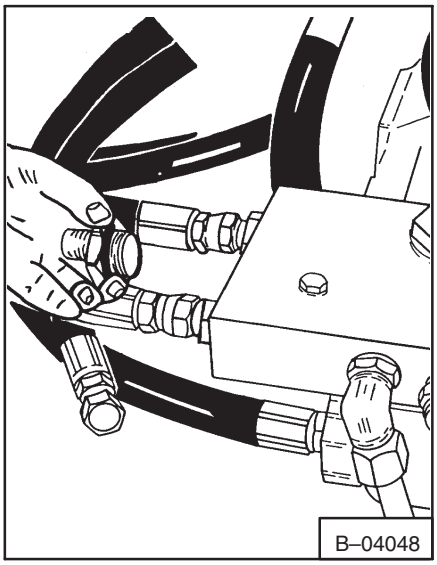

Fig. 3–24 Removing Adapter

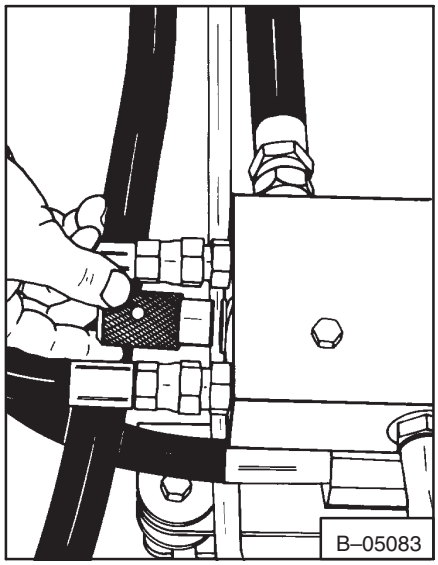

Fig. 3–24a Installing Tool

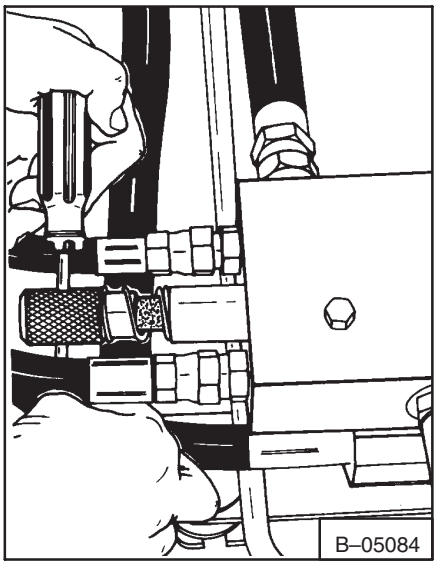

Fig. 3–24b Removing The Filter

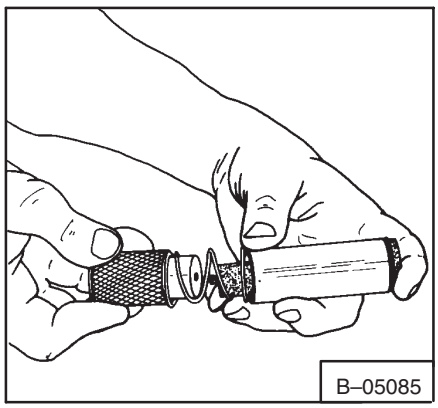

Fig. 3–25 Removing The Tool

6. Remove the filter, spring and sleeve from the port block (Fig. 3–24b).

7. Remove the special tool from the filter (Fig. 3–25).

NOTE: DO NOT remove the sleeve before removing the bronze filter. Particles trapped by the filter may drop into the port block and enter the system. Always check the port block for debris and clean the bore.

8. Put the sleeve on the new filter, install the filter, sleeve and spring into the port block (Fig. 3–26).

9. Install the fitting into the port block (Fig. 3–23).

10. Install the hose and tighten. Fill the hydraulic/hydrostatic reservoir with fluid.

11. Lower the operator cab (See Paragraph 5–1.2, Page 5–1).

12. Start the engine and run the engine for several minutes.

13. Stop the engine. Check hydraulic/hydrostatic reservoir and add fluid as needed.

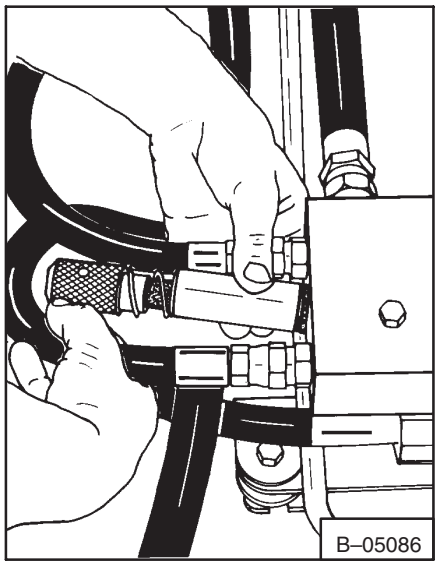

Fig. 3–26 Installing The Filter

3–5.2 Cold Weather By–Pass Valve

Replacement

1. Stop the engine. Drain the hydraulic/hydrostatic reservoir.

2. Raise the operator cab (See Paragraph 5–1, page 5–1).

3. Remove the hose and the fitting on the port block (Fig. 3–27).

4. Remove the spring from the port block (Fig. 3–28).

5. Remove the poppet from the port block using a magnet (Fig.3–29).

6. Clean the valve and check the valve seat in the port block. Replace the parts as needed.

7. Install the by–pass valve and the spring into the port block.

8. Install a new O–ring on the fitting. Install the fitting in the port block and tighten.

9. Install the hose and tighten. Fill the hydraulic/hydrostatic reservoir with fluid.

10. Lower the operator cab (See Paragraph 5–1.2, Page 5–1).

11. Start the engine and run the engine for several minutes.

12. Stop the engine. Check the hydraulic/hydrostatic reservoir. Add oil as needed.

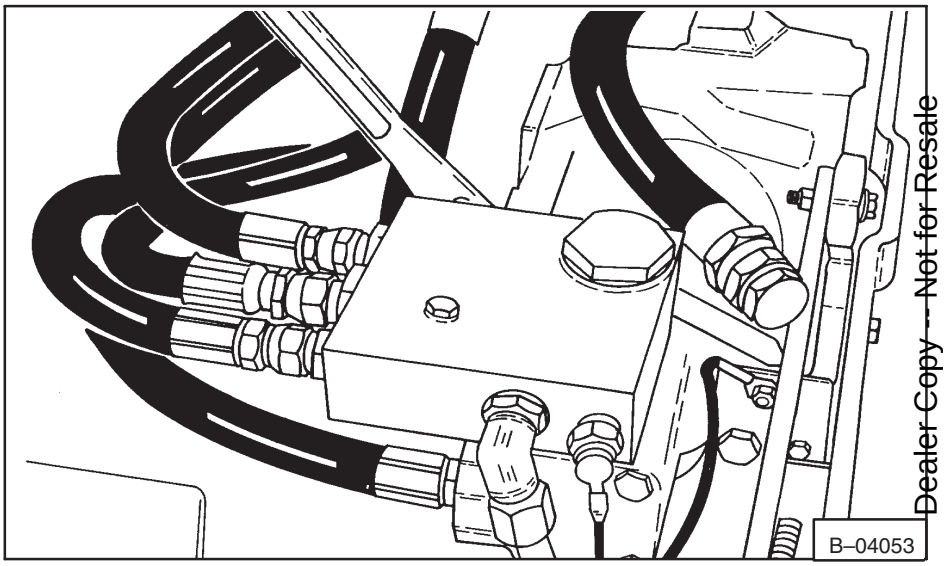

Fig. 3–27 Removing The Fitting

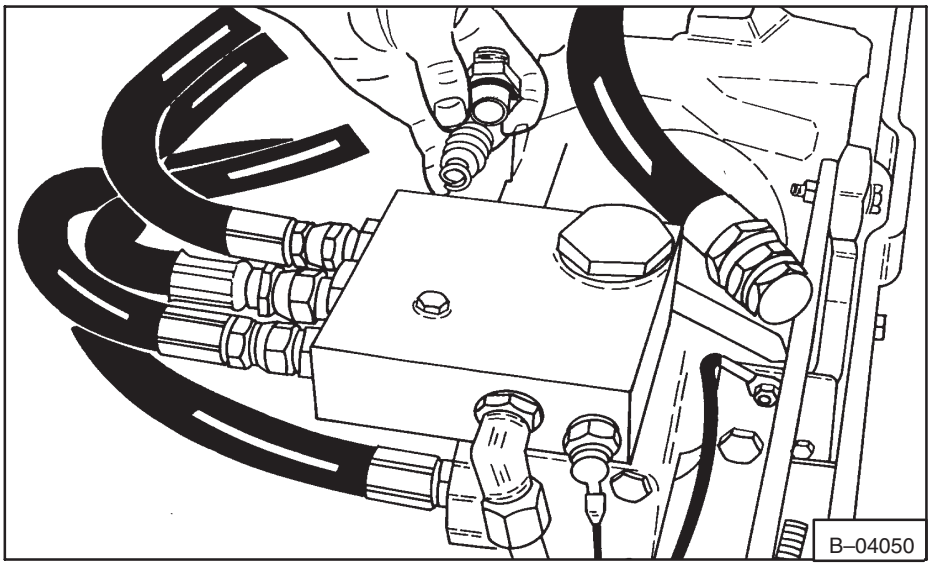

Fig. 3–28 Removing The Spring

Testing:

1. Raise the lift arms all the way up. Stop the engine.

2. Disconnect the hose (Fig. 3–28, Item 1) and plug the port and the hose end.

3. Install the gauge in the port (Fig. 3–28, Item 2).

4. Lower the lift arms and read the pressure on the gauge. It must read 200–224 PSI (1379–1544 kPa).

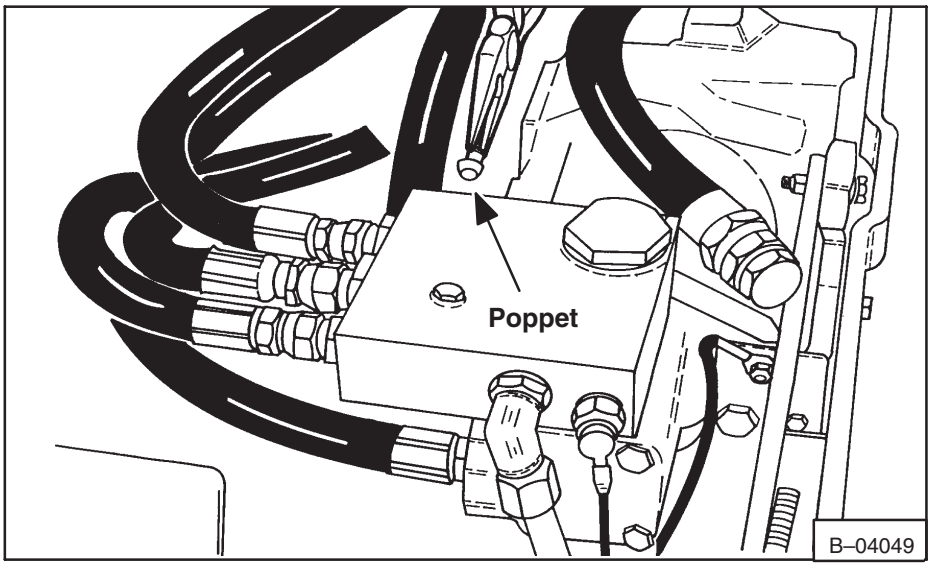

Fig. 3–29 Removing Poppet

3–5.3 Neutral by–Pass Valve

1. Stop the engine and drain the hydraulic/hydrostatic reservoir.

2. Raise the operator cab (See Paragraph 5–1, Page 5–1).

3. Remove the hose and remove the fitting (Fig. 3–30) from the port block.

4. Remove the by–pass valve assembly from the port block (Fig. 3–31).

5. Clean the valve. Check the valve seat in the port block. Replace parts as needed.

6. Install the by–pass valve assembly into the port block (Fig. 3–31).

7. Install the hose and tighten. Fill the hydraulic/hydrostatic reservoir with oil.

8. Lower the operator cab (See Paragraph 5–1, Page 5–1).

9. Start the engine and run the engine for several minutes.

10. Stop the engine. Check the hydraulic/hydrostatic reservoir and add oil as needed.

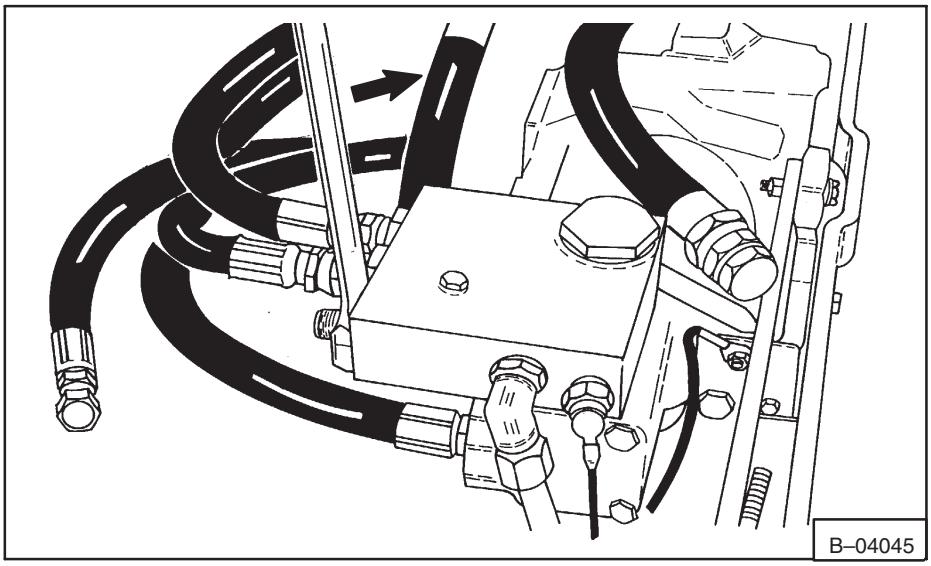

Fig. 3–30 Removing Fitting

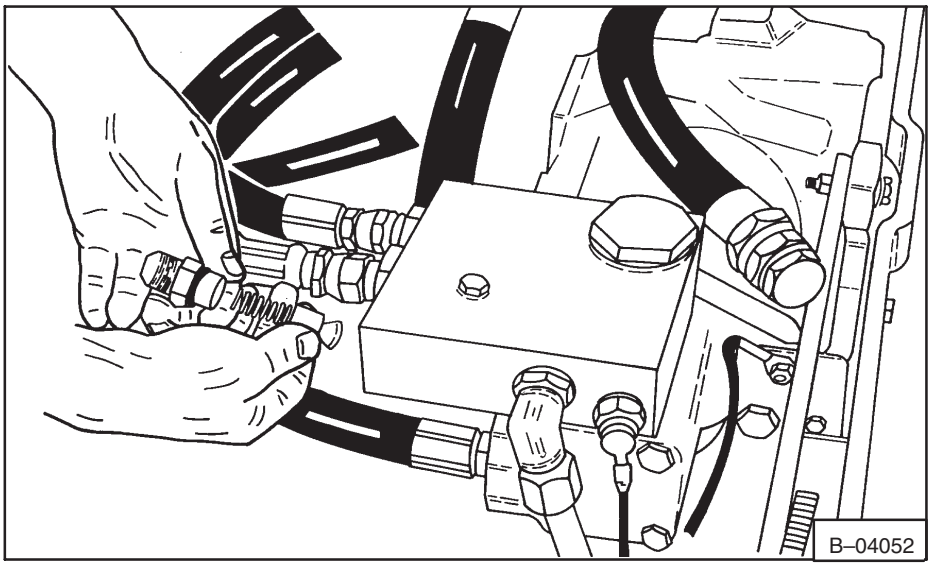

Fig. 3–31 Removing Neutral By–Pass Parts

3–5.4 Removing The Port Block

1. Stop the engine. Drain the hydraulic/hydrostatic reservoir.

2. Raise the operator cab (See Paragraph 5–1, Page 5–1).

IMPORTANT

When repairing hydrostatic and hydraulic systems, clean the work area before disassembly and keep all parts clean. Always use caps and plugs on hoses, tubelines and ports to keep dirt out. Dirt can quickly damage the system.

I–2003–0888

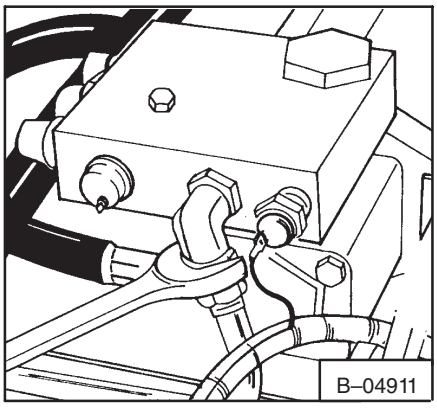

Fig. 3–32 Removing Hoses

3. Remove the hydraulic hoses and tubelines from the port block (Fig. 3–32).

4. Remove the small bolt from the port block. Remove the large bolt at the top of the port block (Fig. 3–33). Use tool MEL1193.

5. Remove the port block from the hydraulic pump.

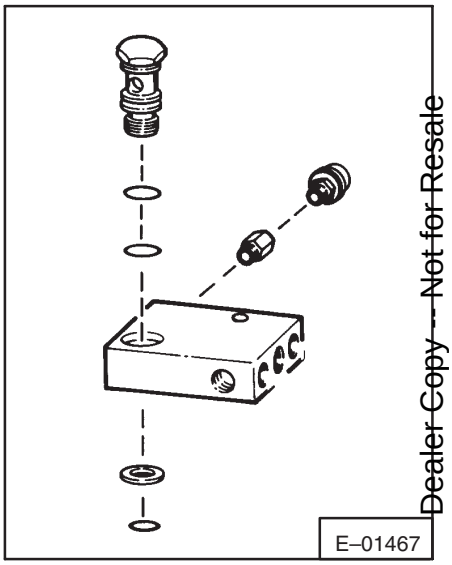

Fig. 3–32a Large Bolt And O–Rings

3–5.5 Installing The Port Block

1. Install new O–rings on the large bolt (Fig. 3–32a).

2. Install the port block on the hydraulic pump and tighten the large bolt (Fig. 3–33) so there will be no leakage at 200 PSI (1379 kPa).

3. Install the small bolt in the port block and tighten 25–28 ft.–lbs. (34–38 Nm) torque.

4. Install the hoses and the tubelines to the correct port in the port block.

5. Fill the hydraulic/hydrostatic reservoir with the correct oil.

6. Lower the operator cab (See Paragraph 5–1, Page 5–1).

7. Start the engine and run the engine for several minutes.

8. Stop the engine and check the reservoir oil level. Add oil as needed.

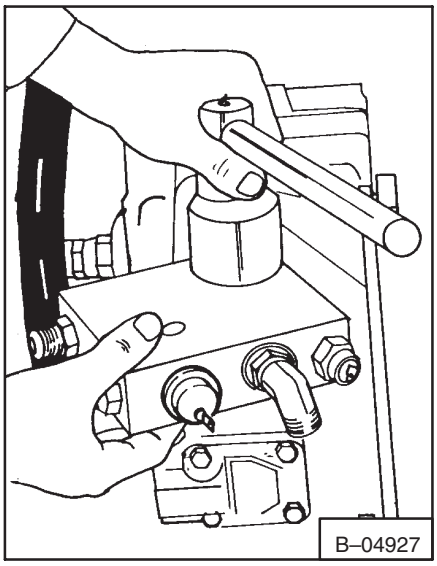

Fig. 3–33 Removing Bolt

3–6 HYDROSTATIC MOTOR

IMPORTANT

When repairing hydrostatic and hydraulic systems, clean the work area before disassembly and keep all parts clean. Always use caps and plugs on hoses, tubelines and ports to keep dirt out. Dirt can quickly damage the system.

I–2003–0888

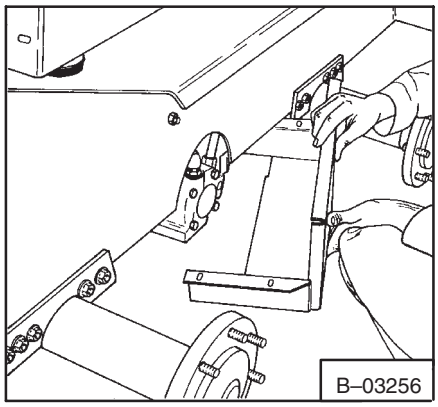

Fig. 3–34 Removing Motor Cover

3–6.1 Removing The Hydrostatic Motor (Model 109–1174–006 & Above)

⚠ WARNING

Put jackstands under the front axles and rear corners of the frame before running the engine for service. Failure to use jackstands can allow the machine to fall or move and cause injury or death.

W–2017–0286

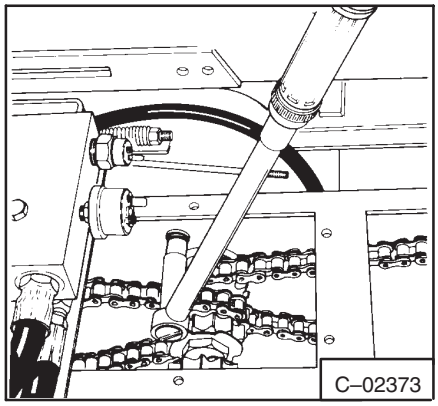

Fig. 3–34a Removing Motor Bolts

1. Remove the wheel assembly from the side of the loader that the motor is going to be removed.
2. Remove the motor cover (Fig. 3–34).
3. Disconnect the hoses from the motor. Mark the location of the hoses for correct assembly.
4. Remove the bolts from the motor flange.
5. Remove the motor from the chaincase.

3–6.1a Removing The Hydrostatic Motor (Model 109–1052–006 & Below)

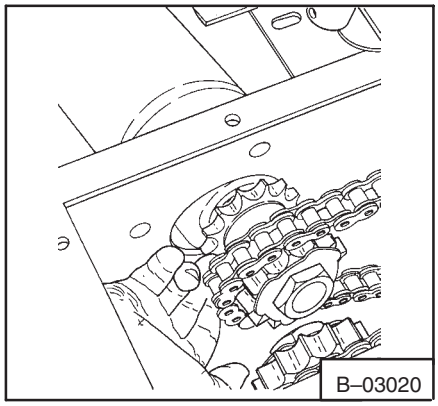

Fig. 3–34b Removing The Motor

1. Raise the lift arms and install lift arm stop.
2. Remove the wheel assembly from the side of the loader that the motor is going to be removed from.
3. Raise the operator cab.
4. Remove the brake pedal and rod assembly.
5. Remove the steering cross shaft and steering levers.
6. Remove the front hydrostatic pump mounting bolts.
7. Remove the charge inlet hose. Install a plug in the hose.
8. Lift the front of the pump assembly and install a 1.500 inch block under the pump mount. This will give clearance to remove the chaincase cover.
9. Remove the chaincase covers from under the pump. Be careful, do not damage the cover gaskets.
10. Move the brake disc toward the drive chain.
11. Rotate the retaining washer for the brake disc so that the brake disc can be removed from the sprocket.
12. Remove the brake disc. If the disc can not be removed because of limited space between the sprocket retaining nut, loosen the four bolts on one hydrostatic motor and move the motor to make space for removing the brake disc.
13. Use a chain breaker tool to separate the front chain (MEL1046).
14. Remove the front chain from the motor sprocket.

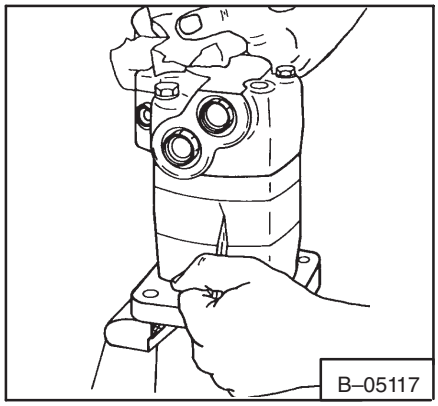

Fig. 3–35 Marking Motor Section

15. Disconnect the high pressure hoses from the motor.

16. Install plugs in the hose and motor openings.

17. Remove the case drain hose from the motor.

18. Use a lead pencil to draw an outline around the outside perimeter of the motor. This will aid as a reference to remove paint from the chaincase later.

19. Remove the four fastening bolts from the motor (Fig. 3–34a).

20. Hold the motor at an angle and remove the rear chain from the motor sprocket (Fig. 3–34b).

21. Remove the motor.

3–6.2 Disassembly Of The Hydrostatic Motor

The tools listed will be needed to do the following procedure:

MEL1187 Special Socket

NOTE: Clean the outside of the motor before disassembly . Keep all the parts of the motor clean.

1. Use a puller to remove the chain sprocket from the motor shaft. Put the motor in a vise, holding it by the mounting flange with the shaft in the down position. Put a mark across the motor sections for correct assembly (Fig. 3–35).

bobcat®

2. Remove the four bolts from the motor (Fig. 3–36).

3. Lift the valve housing (Fig. 3–37) straight up. If done carefully, the springs and balance plate will stay on the valve.

4. Put the valve housing on the bench with the open end up.

5. Remove the two O–rings (small and large) (Fig. 3–38) from the valve housing.

NOTE: Machine surfaces must be put on a soft cloth.

6. Remove the plug from the valve housing (Fig. 3–39).

7. Remove the spring, dash pot and poppet (Fig. 3–39).

8. Use a punch, remove the poppet, spring, O–ring, dashpot and the plug and the shuttle (Fig. 3–41).

9. Remove the two springs from the balance plate (Fig. 3–42).

10. Remove the balance plate.

11. Remove the seals from the balance plate (Fig. 3–43).

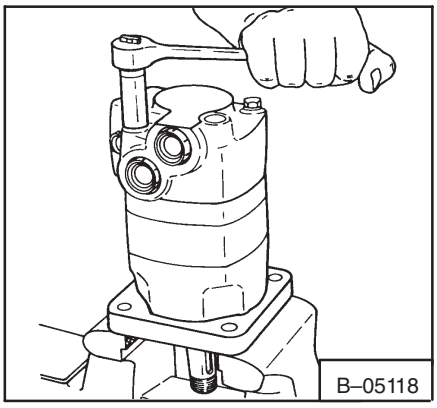

Fig. 3–36 Removing Motor Bolts

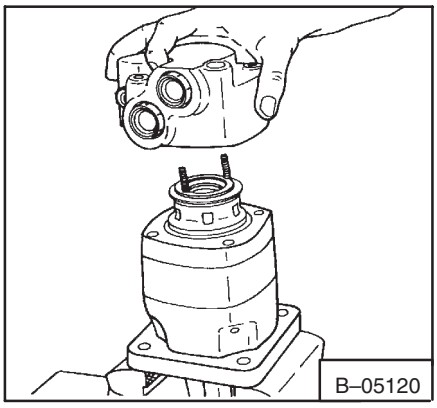

Fig. 3–37 Removing The Valve Housing

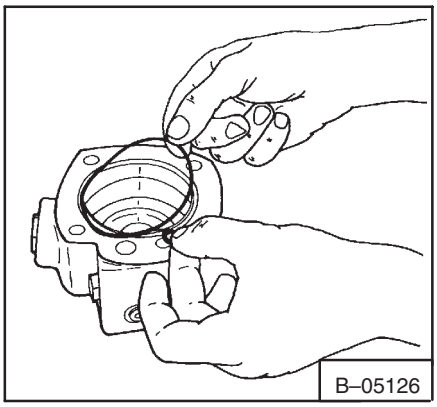

Fig. 3–38 Removing O–Rings

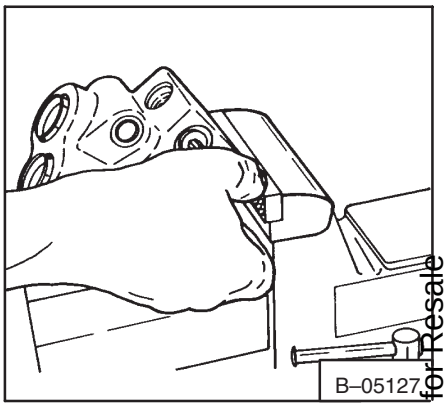

Fig. 3–39 Removing Plug

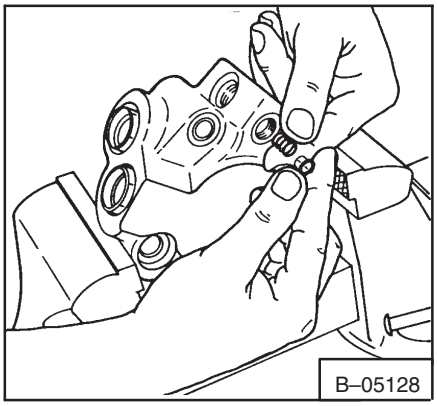

Fig. 3–40 Removing Springs

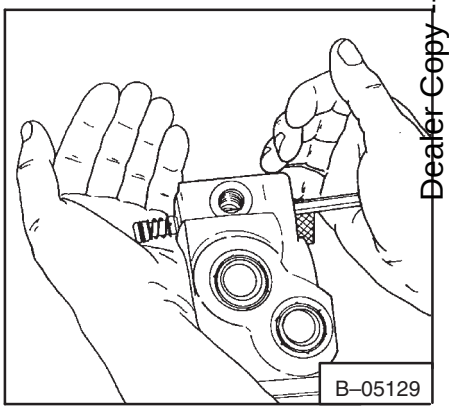

Fig. 3–41 Removing Shuttle Valve

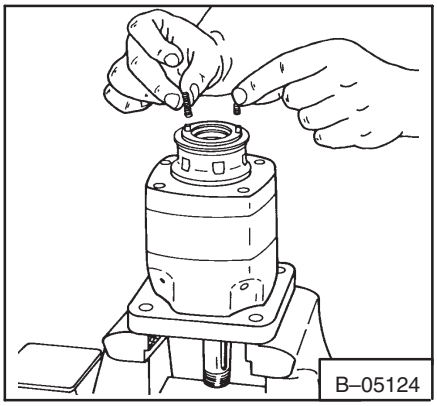

Fig. 3–42 Removing Spring From Plate

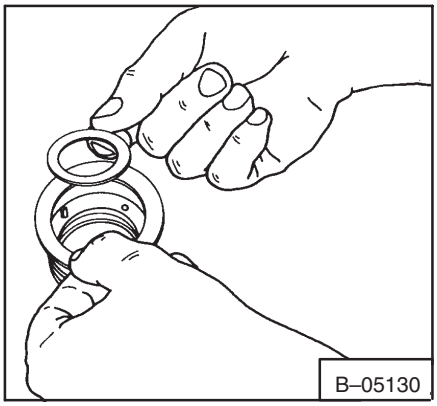

Fig. 3–43 Removing Balance Plate Seals

12. Remove the valve (Fig. 3–44).

13. Remove the valve plate (Fig. 3–45).

14. Remove the valve drive (Fig. 3–46).

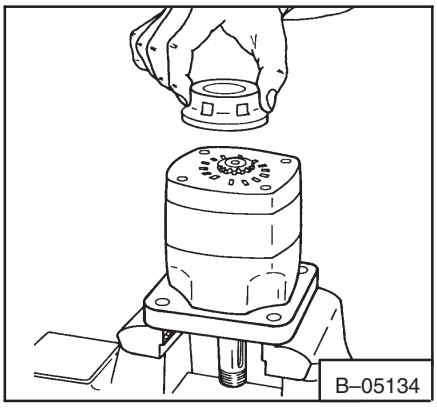

Fig. 3–44 Removing The Valve

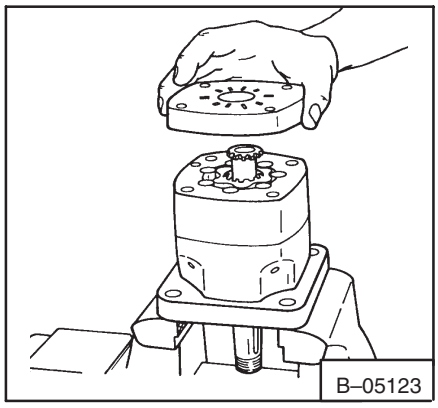

Fig. 3–45 Removing Valve Plate

15. Remove the geroler (Fig. 3–47). Be sure the rollers are kept in the geroler.

16. Remove the two O–rings from the geroler.

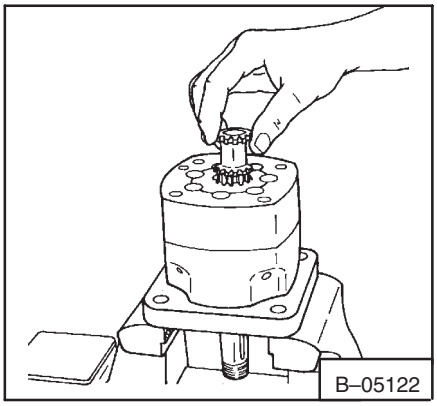

Fig. 3–46 Removing Valve Drive

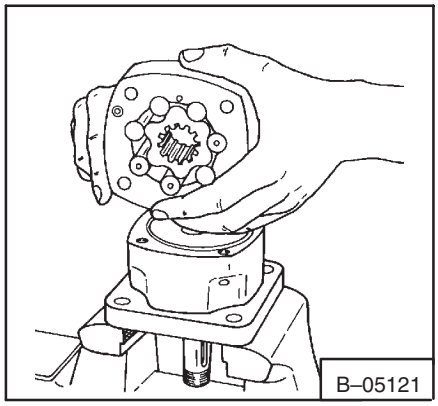

Fig. 3–47 Removing The Geroler

17. Remove the drive shaft (Fig. 3–48).

18. Remove the O–rings (large and small) from the bearing housing (Fig. 3–49).

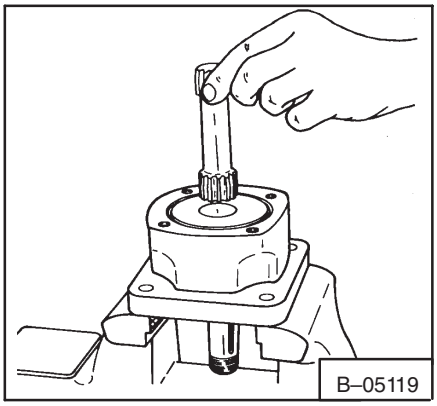

Fig. 3–48 Removing The Drive Shaft

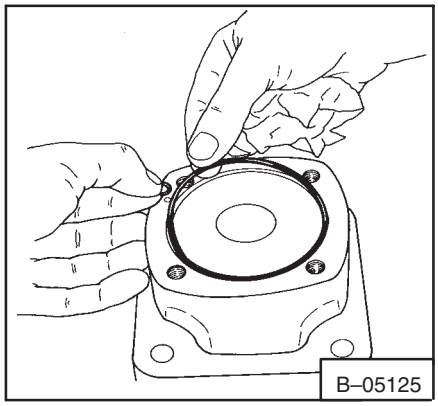

Fig. 3–49 Removing The O–Rings

19. Turn the bearing housing over in the vise and remove the eight bolts (Fig. 3–50).

20. Using a plastic hammer, tap the mounting flange from the housing (Fig. 3–51).

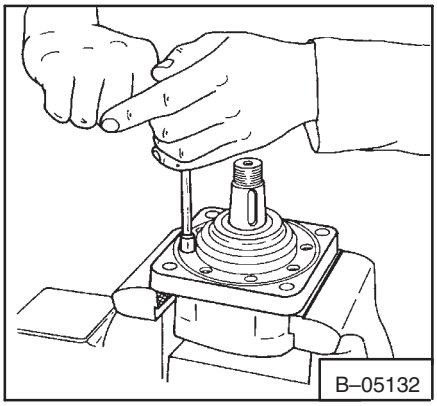

Fig. 3–50 Removing Bolts

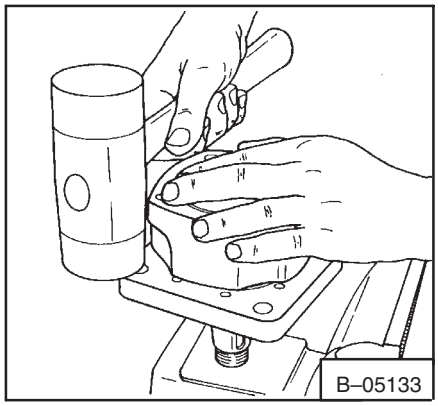

Fig. 3–51 Removing Housing

NOTE: To remove the seal and back–up washer for the Models 109–1052–005 & below see figures 3–52 & 3–53. To remove the dust seal and inner seal for the Models 109–1052–006 see figures 3–53a & 3–53b.

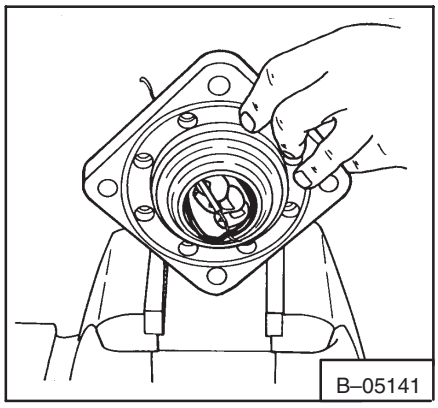

Fig. 3–52 Removing Back–Up Washer

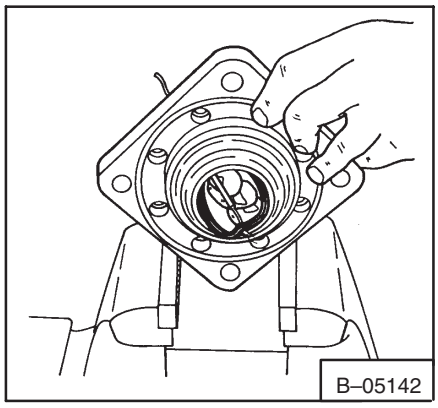

Fig. 3–53 Removing Seal

21. Remove the back–up washer and seal from the mounting flange (Fig. 3–52 & 3–53).

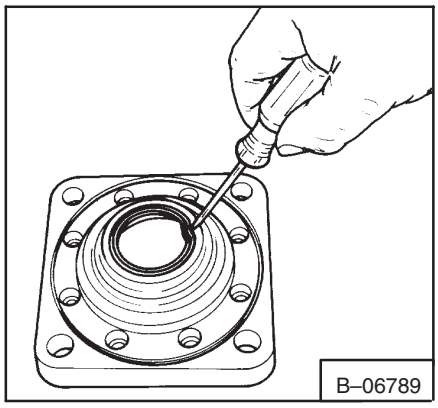

Fig. 3–53a Removing Dust Seal

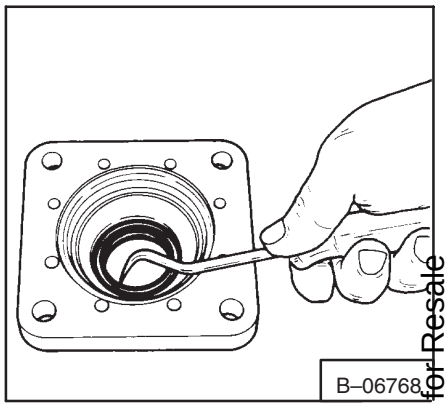

Fig. 3–53b Removing Inner Seal

22. Remove the dust seal and inner seal from the mounting flange (Fig. 3–53a & 3–53b).

23. Remove the large O–ring from the mounting flange (Fig. 3–54).

24. Use a press to remove the shaft and bearing assembly (Fig. 3–55).

25. Remove the shaft surface seal from the bore of the bearing housing (Fig. 3–56).

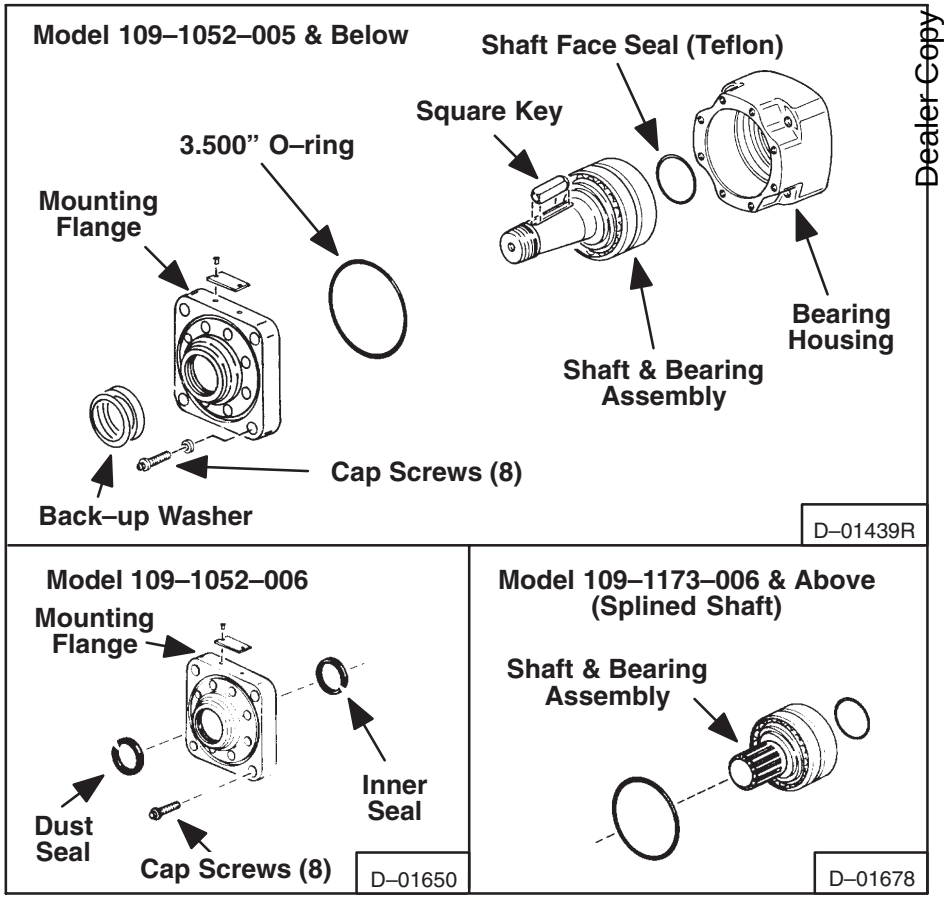

Fig. 3–54 Drive End For The Hydrostatic Motor

3–6.3 Hydrostatic Motor Inspection

Before the hydrostatic motor is assembled, check the following items and replace as needed.

1. Check the geroler (Fig. 3–57).
2. Check the geroler rollers (Fig. 3–58).
3. Check the rotor.
4. Check the valve plate (Fig. 3–59).
5. Check the valve (Fig. 3–60 & 3–61).
6. Check the balance plate (Fig. 3–62).
7. Check the valve drive shaft and the main drive shaft for wear.
8. Check the end plate for scratches.
9. Check the shuttle valve assembly (Fig. 3–63).

Check all the contact surfaces. Replace any parts that have scratches or are worn that can cause leakage.

Clean all the parts in solvent and use air pressure to dry the parts. DO NOT use cloth or paper because small pieces of material can get into the systems and cause damage. Do not use sandpaper or a file to remove scratches on any of the parts.

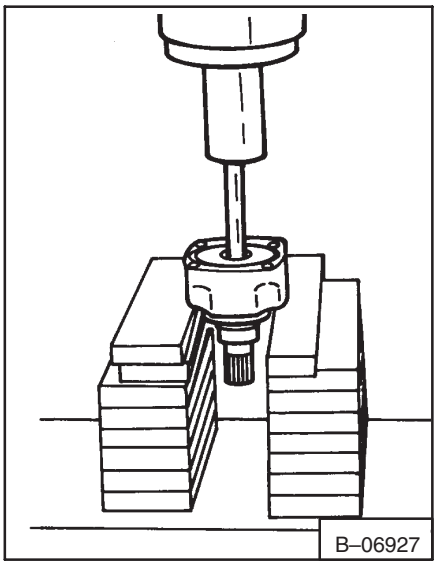

Fig. 3–55 Removing The Shaft

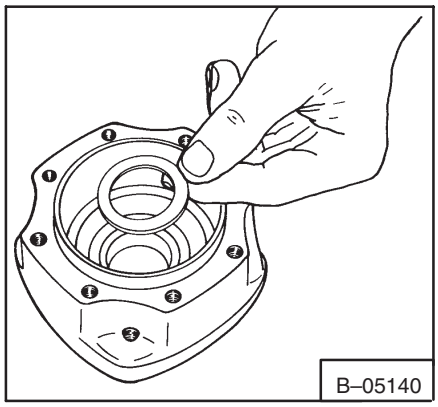

Fig. 3–56 Removing Shaft Seal

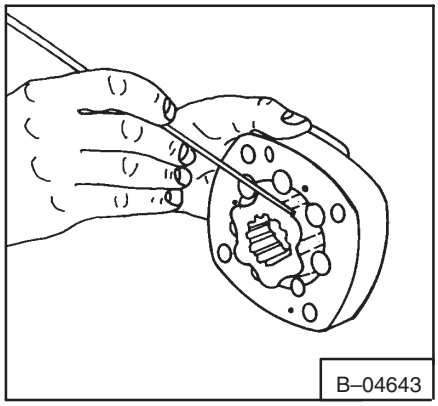

Fig. 3–57 Checking Geroler

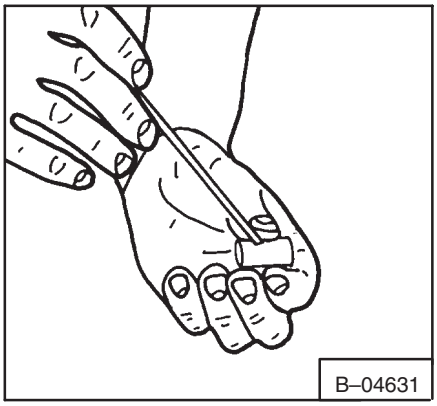

Fig. 3–58 Checking Rollers

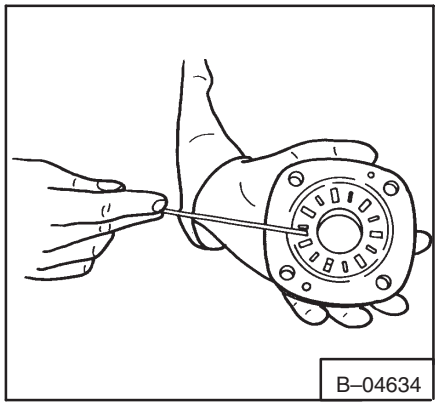

Fig. 3–59 Checking Valve Plate

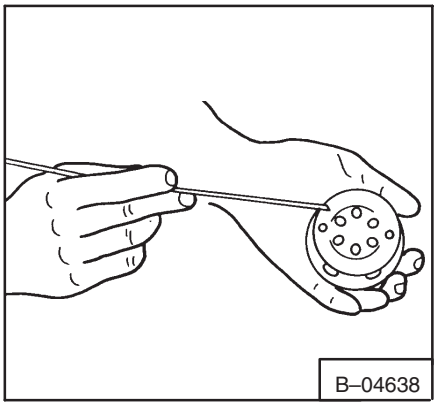

Fig. 3–60 Checking Valve

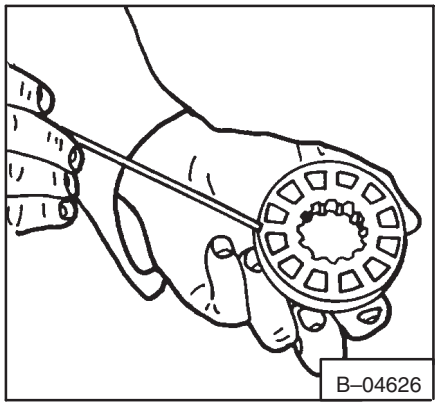

Fig. 3–61 Checking Valve

3–6.4 Assembly Of The Hydrostatic Motor (Fig. 3–64)

The tools listed will be needed to do the following procedure:

MEL1015 Seal Tool
MEL1187 Socket (5/16 inch)

IMPORTANT

Use grease such as Dow Corning #44 or V aseline petroleum jelly to hold seals, O–rings and bearings in position during assembly.

I–2010–0597

NOTE: Always use a NEW seal kit when assembling the hydrostatic motor.

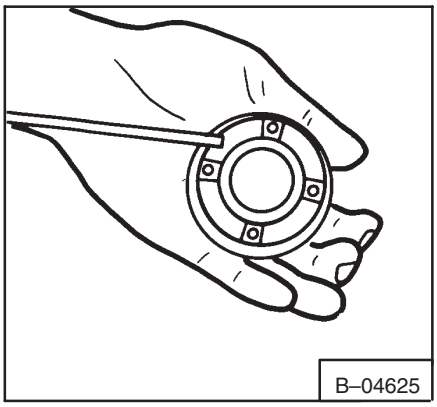

Fig. 3–62 Checking Balance Plate

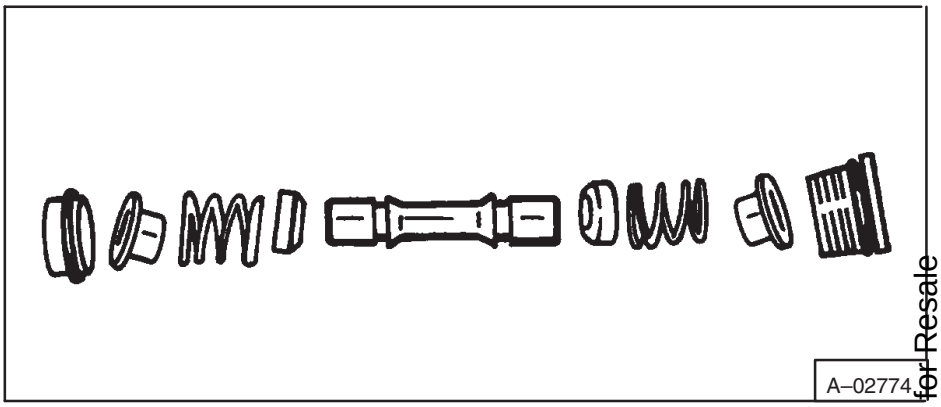

Fig. 3–63 Shuttle Valve Assembly

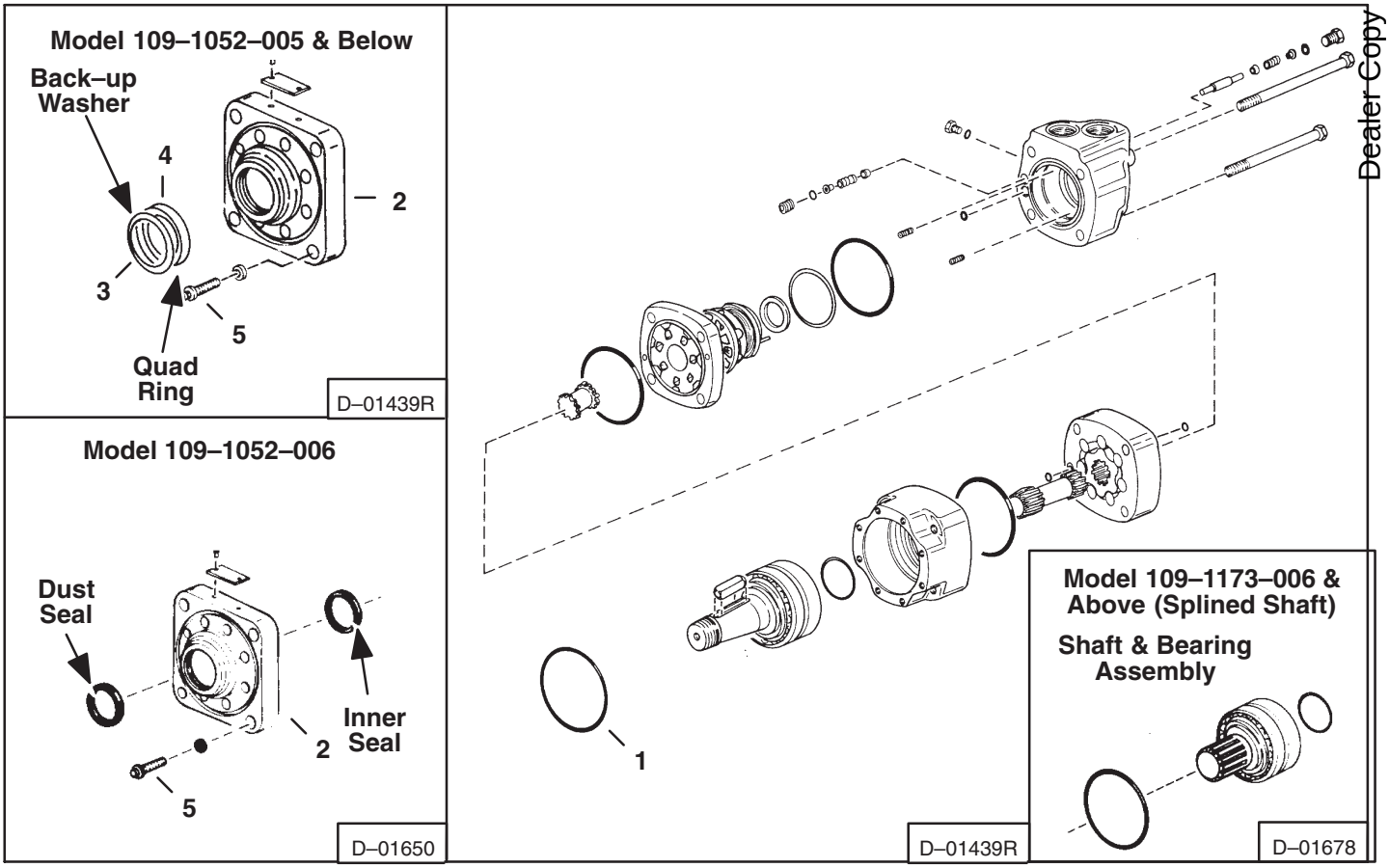

Fig. 3–64 Hydrostatic Motor Assembly

1. Put the bearing housing on a smooth surface with the largest opening up.

2. Take the largest diameter half of the seal tool and lubricate the inside.

3. Install the seal tool into the bearing housing (Fig. 3–65).

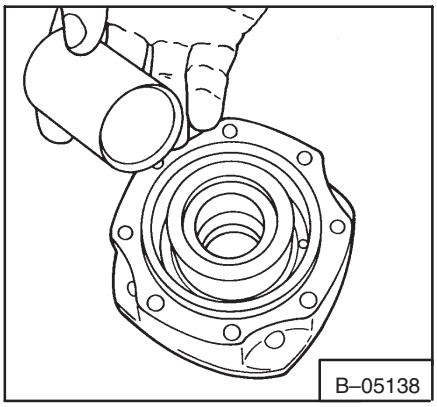

Fig. 3–65 Installing Seal Tool

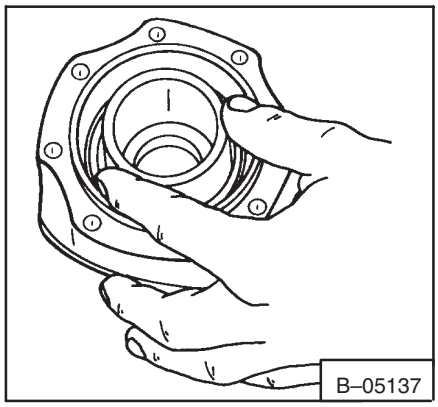

Fig. 3–66 Installing The Seal

4. Install the shaft face seal (with the inside edge up) into the seal tool.

5. Install the small diameter half of the seal tool and push the seal into the correct position (Fig. 3–66).

6. Press the shaft and the bearing assembly into the bearing housing (Fig. 3–67). Be careful not to damage the shaft seal. Turn the shaft several times to make sure that the shaft is free.

NOTE: If the shaft and the bearing assembly is damaged it must be replaced as a complete unit. There are no replacement parts in the shaft bearing assembly.

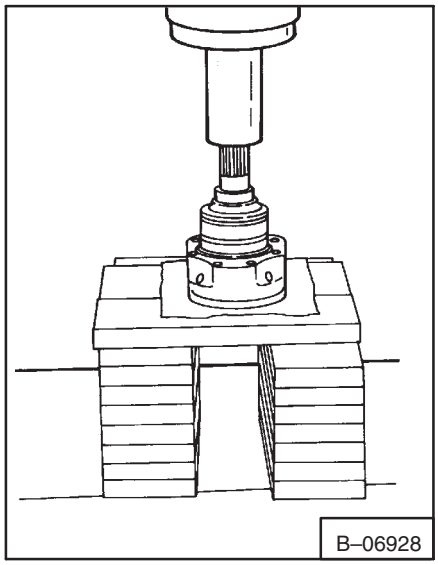

Fig. 3–67 Installing Shaft Assembly

7. Lubricate the 3.500 inches (88,9 mm) diameter O–ring (Fig. 3–64, Item 1). Install the O–ring on the bearing housing (Item 2).

8. **Model 108–1052–005 & Below Only:** Install the back–up washer (Fig. 3–64, Item 3) and the seal (Item 4) in the mounting flange. The seal must be toward the inside of the motor. Lubricate the inside of the seal.

   Model 109–1052–006 & 109–1173–006: Install the inner seal, using the tool, into the mounting flange (Fig. 3–67a). Install the dust seal, using the tool, into the outside of the mounting flange (Fig. 3–67b).

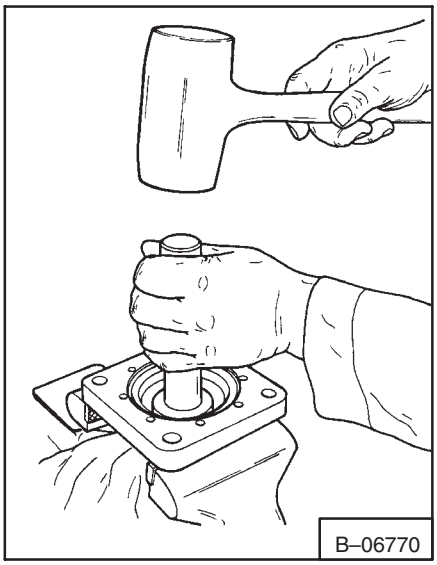

Fig. 3–67a Installing Inner Seal

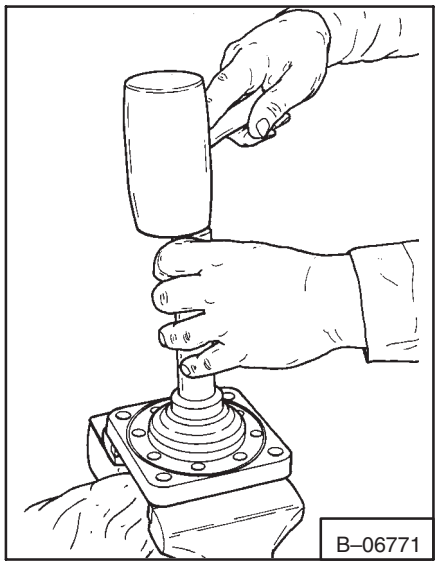

Fig. 3–67b Installing Dust Seal

9. Turn the mounting flange while installing it over the shaft. Be careful not to damage the seals.

10. Put oil on the threads of the eight bolts (Fig. 3–64, Item 5). Install the bolts in the mounting flange and tighten them with your hand only.

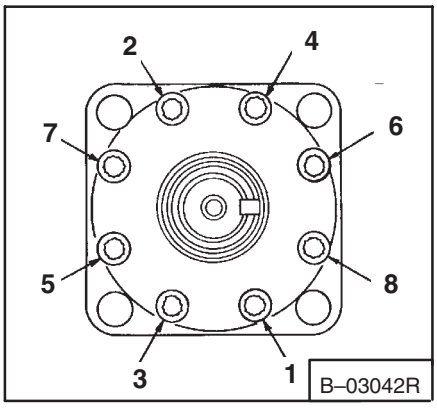

Fig. 3–68 Tightening Sequence

11. Put the motor in a vise and tighten the bolts evenly to 250 in.–lbs. (28 Nm) torque. Use the correct tightening sequence (Fig. 3–68).

12. Install the key in the keyway of the shaft.

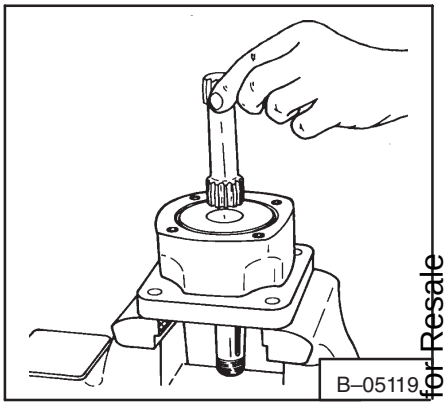

Fig. 3–69 Installing Drive Shaft

13. Put the motor in a vise with the output shaft down (Clamp the sides of the mounting flange only).

14. Put a small amount of oil on the output shaft.

15. Put petroleum jelly on the 3.500 inches (88,9 mm) diameter O–ring and install it in the outer groove in the bearing housing.

16. Install the main drive in the output shaft (Fig. 3–69).

17. Put petroleum jelly on the two 0.250 inch (6,35 mm) diameter O–rings. Install the O–rings, one on each side of the geroler ring.

The timing of the motor controls the direction of rotation of the drive shaft of the motor. The timing parts are as follows (Fig. 3–70):

(a) Geroler (Item 1).

(b) Valve Drive (Item 2).

(c) Valve Plate (Item 3).

(d) Valve (Item 4).

18. Find the largest opening between the geroler star and the geroler ring and mark the outside of the geroler ring at the location (Fig. 3–70).

19. Align the case drain hole and the three pressure holes in the geroler ring with the same holes in the mounting flange and install the geroler assembly. Be sure to keep the roller in position.

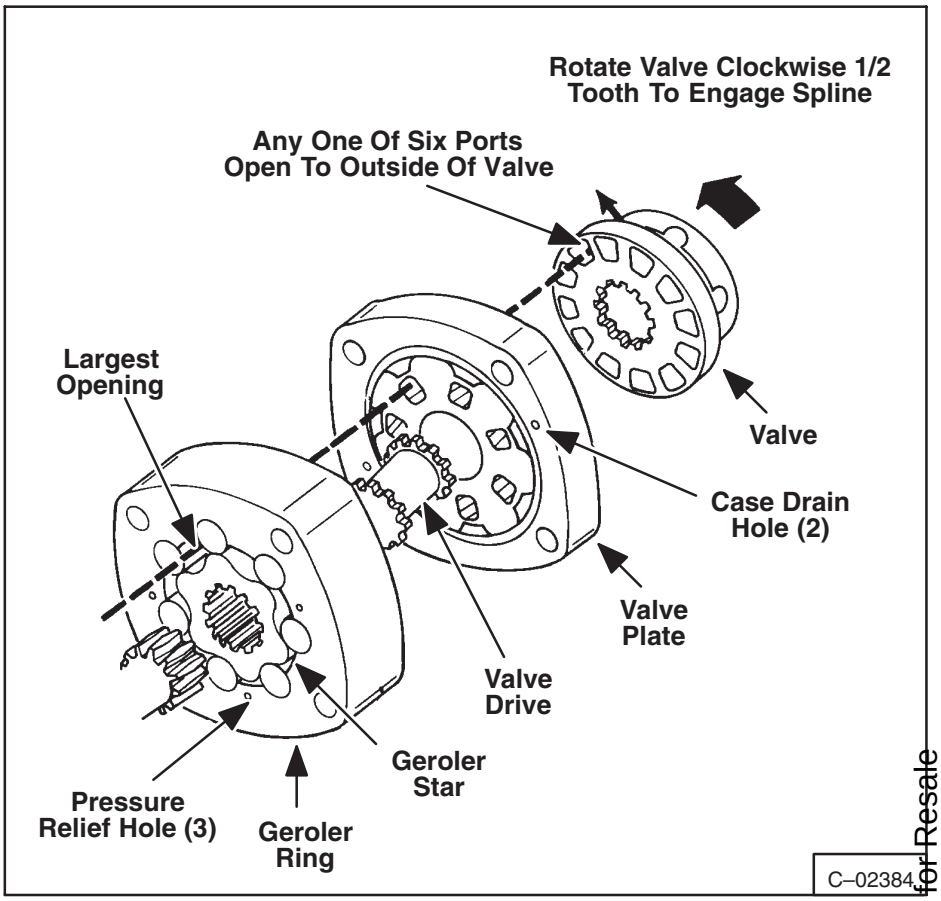

Fig. 3–70 Timing The Motor

20. Install the valve drive in the geroler (Fig. 3–70, Item 3).

NOTE: When looking through the seven holes (Fig. 3–70, Item 5) in the valve plate if you can see a roller in all the holes, it is assembled incorrectly, the motor will lock–up.

21. Put petroleum jelly on the 3.500 inches (88,9 mm) diameter O–ring. Install the O–ring on the valve plate.

22. Align the case drain hole in the valve plate with the case drain hole in the geroler. Install the valve plate toward the geroler.

NOTE: Make sure the slot opening of the valve plate is in alignment with the largest opening of the geroler.

23. Align the valve on the valve drive so that any one of the side openings is in alignment with the mark you made on the outside of the geroler . Turn the valve clockwise 1/2 tooth to engage the drive. This will give the rotation shown when pressurized (Fig. 3–71).

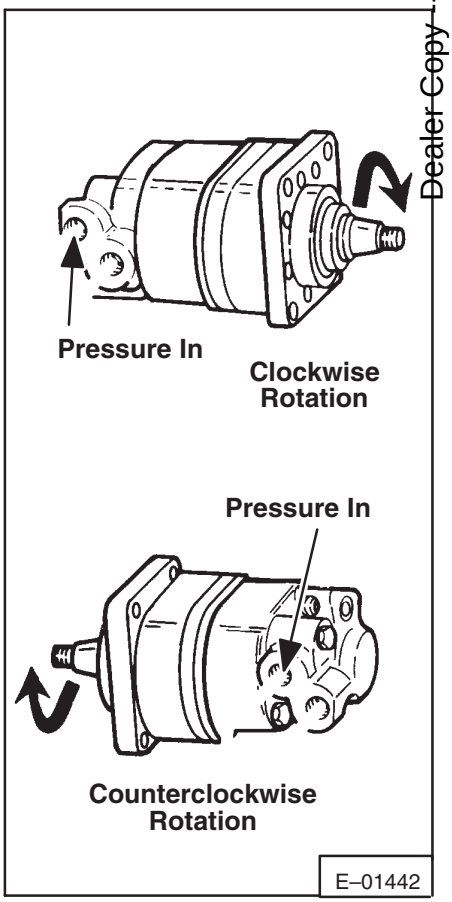

Fig. 3–71 Rotation Of The Motor

24. Install the poppet, spring, dampener, O–ring and plug in the valve housing.

25. Install the shuttle (Fig. 3–72), poppet, dampener and spring in the other side of the housing.

26. Install a new O–ring on the plug and install the plug and tighten.

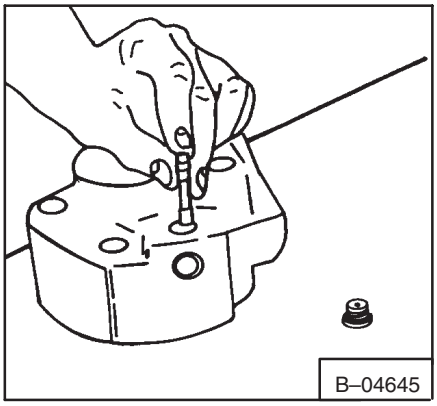

Fig. 3–72 Installing Shuttle Valve

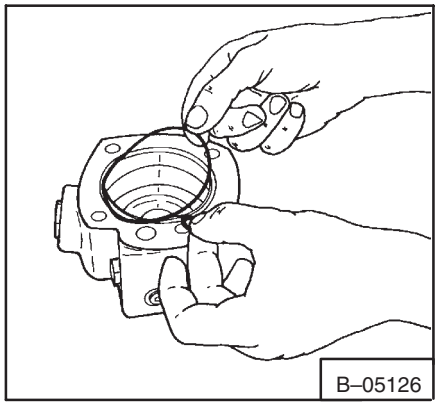

Fig. 3–73 Installing O–Rings

27. Put grease on the 0.250 inch (6,36 mm) O–rings and install them on the housing (Fig. 3–73).

28. Install the spring and pins (Fig. 3–74) in the valve housing.

NOTE: Earlier model loaders have pins installed in the balance plate (Fig. 3–75).

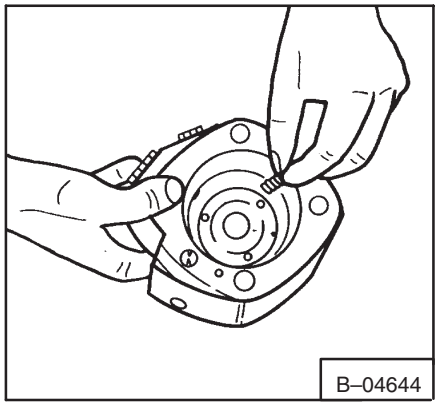

Fig. 3–74 Installing Springs And Pins

29. Put grease on the inner and outer seals (Fig. 3–75) and install the seals onto the balance plate. Make sure they are in theposition shown in figure 3–75.

30. Install the balance plate assembly on the springs (Fig. 3–76).

NOTE: The pins (Fig. 3–75) must be in alignment with the holes in the balance plate.

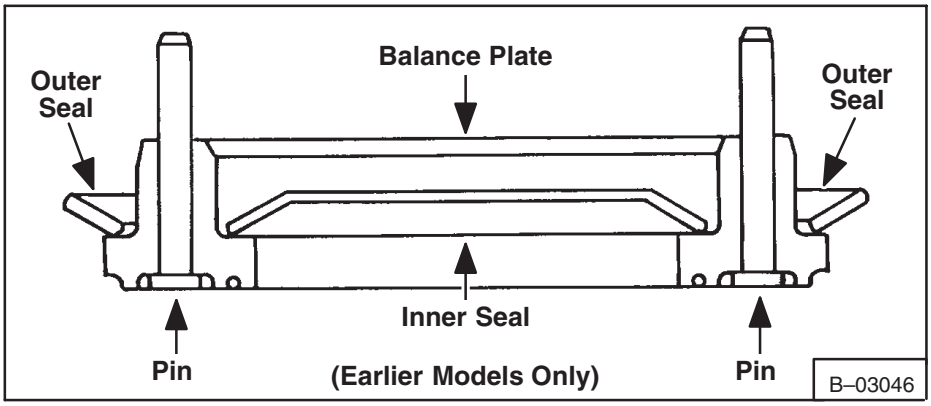

Fig. 3–75 Balance Plate Assembly

31. Make sure the case drain holes are in alignment. Install the valve housing by putting your finger through the port in the housing to hold the balance plate assembly in position (Fig. 3–77).

32. Check all the surfaces thatcontact each other to make sure all the O–rings are in position.

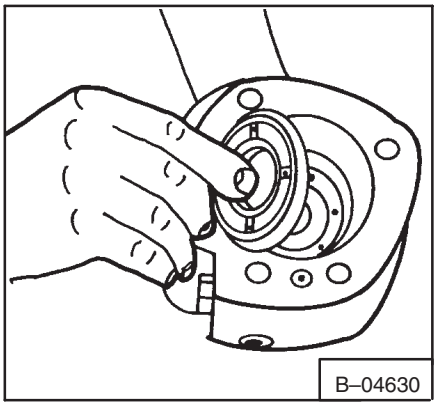

Fig. 3–76 Installing Balance Plate

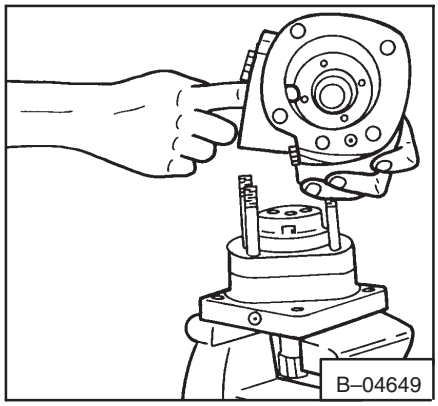

Fig. 3–77 Installing Housing

33. Install the bolts. Use the sequence (Fig. 3–78) and tighten the bolts to 50 ft.–lbs. (68 Nm) torque (Fig. 3–79).

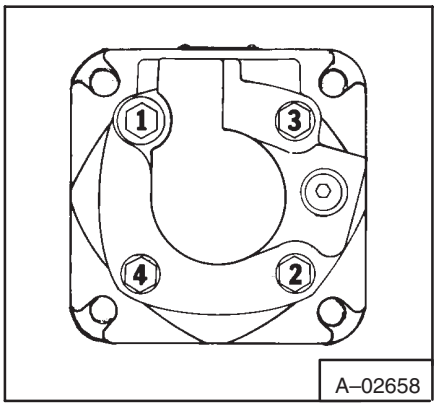

Fig. 3–78 Tighten Sequence

3–6.5 Installing The Hydrostatic Motor (Model 109–1173–006 & Above) (Splined Shaft)

1. Install the motor into the chaincase (Fig. 3–80).
2. Install the four bolts and tighten to 65–70 ft.–lbs. (88–95 Nm) torque.
3. Connect the hoses to the correct ports of the hydrostatic motor (Fig. 3–80a).
4. Tighten the hoses. Install the motor cover (Fig. 3–82).
5. Install the tire and wheel assembly onto the loader.
6. Check the hydraulic/hydrostatic fluid reservoir. Add fluid as needed.
7. See Paragraph 3–6.6 for the correct Start–up Procedure.

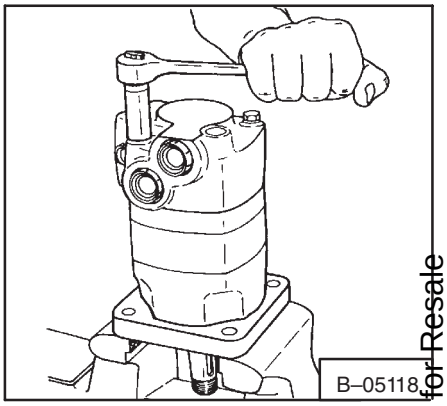

Fig. 3–79 Tighten Bolts

3–6.5a Installing the Hydrostatic Motor (Model 109–1052–006 & Below)

1. Remove all the paint from the motor mounting area as outlined by the lead pencil.
2. Install the motor into the chaincase.
3. Put the rear chain over the motor sprocket (Fig. 3–82a).
4. Install the bolts, washers and use new locknuts. Hand tighten the nuts.
5. Install the front drive chain (See Paragraph 4–2.1, Page 4–4) (Use tool MEL1037).
6. Install the brake disc over the motor sprocket.

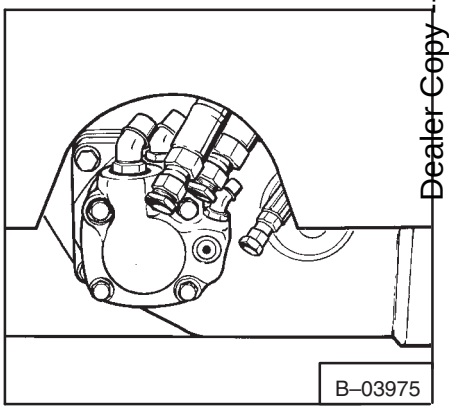

Fig. 3–80 Installing The Motor

NOTE: It may be necessary to temporarily put both brake discs on one motor sprocket to make room for tightening the four motor fastening bolts.

7. Tighten the four mounting nuts and bolts to 100–110 ft.–lbs. (136–149 Nm) torque (Fig. 3–82b).
8. Turn the disc retaining washer so that the lobes on the disc are behind the lobes of the retaining washer (Fig. 3–82c).
9. Connect the high pressure hoses to the correct ports of the hydrostatic motor (Fig. 3–81a).

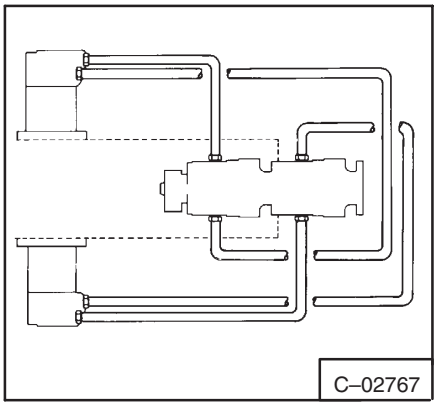

Fig. 81a Hose Routing

10. Connect the case drain hose to the hydrostatic motor.
11. Install the chaincase covers.
12. Remove the block from under the hydrostatic pump mount.
13. Install the pump mount bolts and tighten.
14. Connect and tighten the charge pressure hose.
15. Install the brake pedal assembly and rod.
16. Make adjustment to the brakepedal (See Paragraph 4–1.1, Page 4–1).

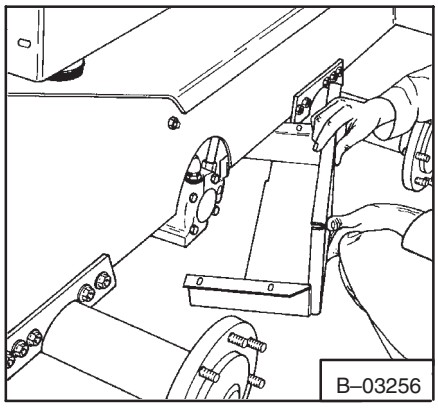

Fig. 3–82 Installing Motor Cover

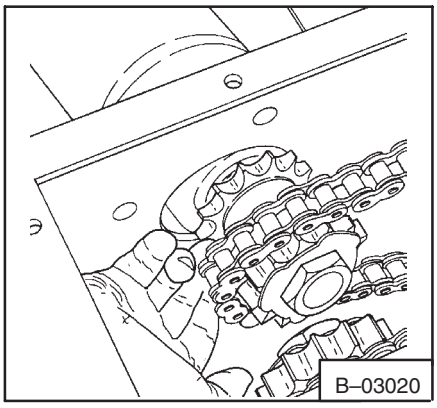

Fig. 3–82a Installing The Motor

17. Install the steering cross shaft and steering levers.
18. Lower the operator cab.
19. Install the motor cover (Fig 3–82). Install the tire and wheel assembly.
20. Check the hydraulic/hydrostatic fluid reservoir. Add fluid as needed.
21. See Paragraph 3–6.6 for the correct Start–Up Procedure.

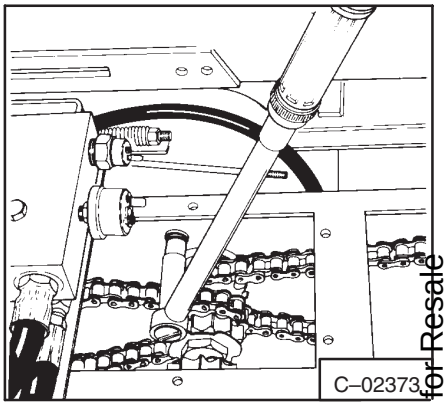

Fig. 3–82b Tighten Motor Bolts

3–6.6 Start–Up Procedure For The Hydrostatic Motor

Because of the close tolerance in the hydrostatic motor it is very important that the motor is NOT OPERATED WITHOUT A LOAD after being repaired.

The motor MUST BE PUT UNDER A FULL LOAD condition for at least 10 minutes. FULL LOAD can be accomplished by pushing some heavy object or material.

When driving the loader under a no load condition to a full load condition use a low engine RPM and only a small movement of the steering levers. Keep the no load condition to a minimum until the break–in period is completed.

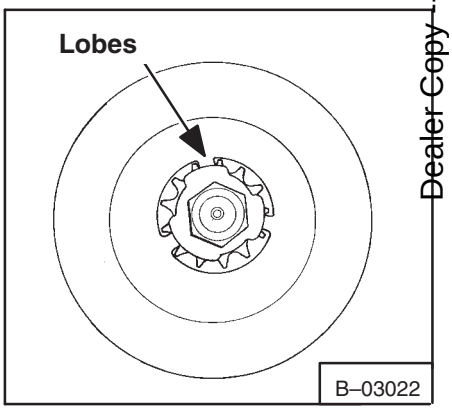

Fig. 3–82c Disc Brake Installed

3–7 HYDROSTATIC PUMP

IMPORTANT

When repairing hydrostatic and hydraulic systems, clean the work area before disassembly and keep all parts clean. Always use caps and plugs on hoses, tubelines and ports to keep dirt out. Dirt can quickly damage the system.

I–2003–0888

3–7.1 Checking The High Pressure Relief Replenishing Valves

If there is a loss of drive in one direction on one side of the loader, use the following procedure to check the replenishing valves.

⚠ WARNING

Put jackstands under the front axles and rear corners of the frame before running the engine for service. Failure to use jackstands can allow the machine to fall or move and cause injury or death.

W–2017–0286

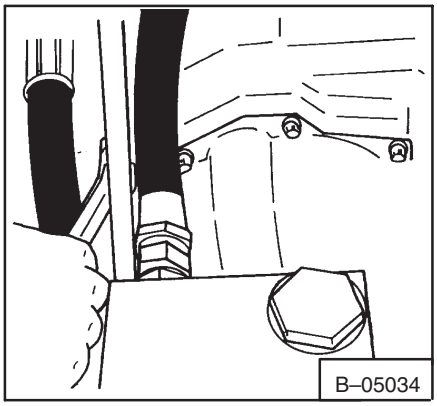

Fig. 3–83 Removing Plugs

1. Raise the operator cab (See Paragraph 5–1, Page 5–1).
2. Remove both plugs (Fig. 3–83) and the replenishing valves that control the direction (forward or reverse) of drive that was lost.
3. Exchange the valves (put into opposite ports) and check for loss of drive on the opposite side of the loader. If there is a loss of drive on the opposite side of the loader the valve that controls the drive on that side needs replacement.
4. Remove the high pressure hydraulic hose from the pump port. Install the 10,000 PSI gauge (Test kit – MEL11739) in the port.
5. With the engine running at idle RPM (wheels off the floor), engage that drive lever a small amount (not more than one inch movement of the lever). Observe the pressure on the gauge. Pressure must reach 3500 to 4000 PSI (24133 to 27580 kPa). DO NOT exceed 4000 PSI (27580 kPa).

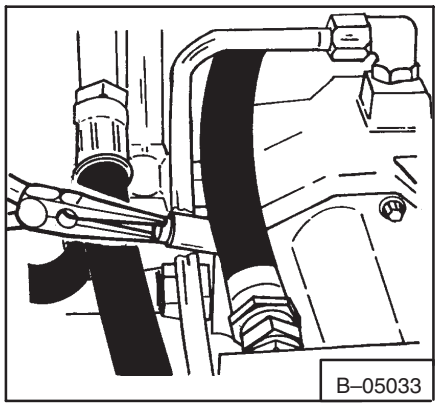

Fig. 3–84 Installing Valves

NOTE: This test can be performed at each high pressure port of the pump which has relief valves. One port test at each pump is enough to test the condition of the valves.

6. Replace the valves as needed.
7. Lower the operator cab (See Paragraph 5–1, Page 5–1).
8. Remove the jackstands from under the loader frame.

3–7.2 Checking The Charge Pressure

WARNING

When the engine is running during service, the steering levers must be in neutral and the parking brake engaged. Failure to do so can cause injury or death.

W–2006–0284

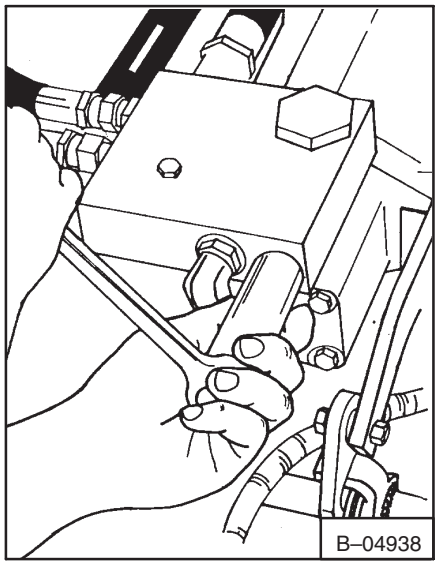

Fig. 3–85 Removing Sender Switch

641 – S/N 13208 & Below
642 – S/N 13523 & Below
643 – S/N 13405 & Below

1. Raise the operator cab (See Paragraph 5–1, Page 5–1.
2. Disconnect the wire from the temperature sender switch on the port block.
3. Remove the temperature switch from the port block (Fig. 3–85).
4. Connect a pressure gauge to the port in the temperature sender port of the port block (Fig. 3–86).
5. Start the engine and run the engine at full RPM.
6. The pressure on the gauge must read 95 PSI (655 kPa) minimum.

NOTE: If the hydrostatic pump needs repairing see Paragraph 3–7.4, Page 3–22.

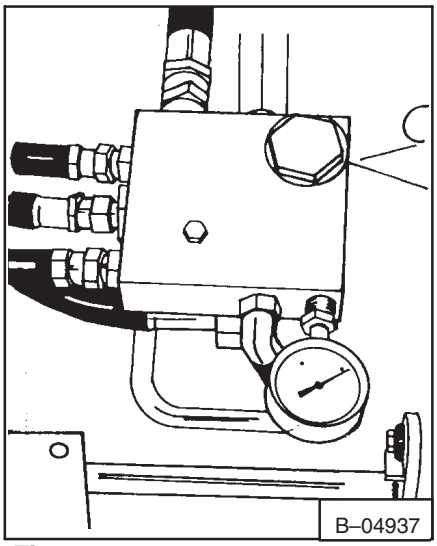

Fig. 3–86 Checking Charge Pressure (Early Production)

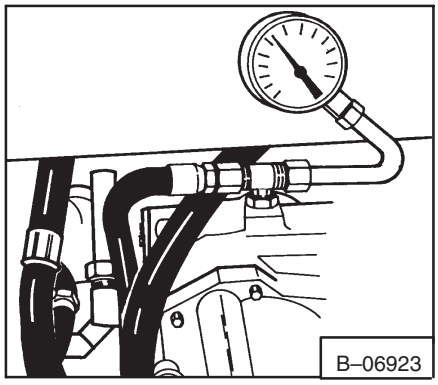

Fig. 3–86A Checking Charge Pressure (Later Production)

7. Remove the gauge. Install the switch and connect the sender wire.

8. Lower the operator cab (See Paragraph 5–1, Page 5–1).

9. Remove the jackstands from under the loader frame.

641 – S/N 13209 & Above
642 – S/N 13524 & Above
643 – S/N 13406 & Above

1. Raise the operator cab (See Paragraph 5–1, Page 5–1).

2. Disconnect the wire from the pressure sender switch on the hydrostatic pump.

3. Remove the switch from the pump.

4. Connect a pressure gauge to the elbow on the hydrostatic pump where the switch was removed (Fig. 3–86A).

5. Start the engine and run the engine at full RPM.

6. The pressure gauge must read 140 PSI (965 kPa) minimum.

NOTE: If the hydrostatic pump needs repairing see Paragraph 3–7.4, Page 3–22.

7. Remove the gauge. Install the switch and connect the sender wire.

8. Lower the operator cab (See Paragraph 5–1, Page 5–1).

9. Remove the jackstands from under the loader frame.

3–7.3 Removing The Hydrostatic Pumps

⚠ WARNING

When the engine is running during service, the steering levers must be in neutral and the parking brake engaged. Failure to do so can cause injury or death.

W–2006–0284

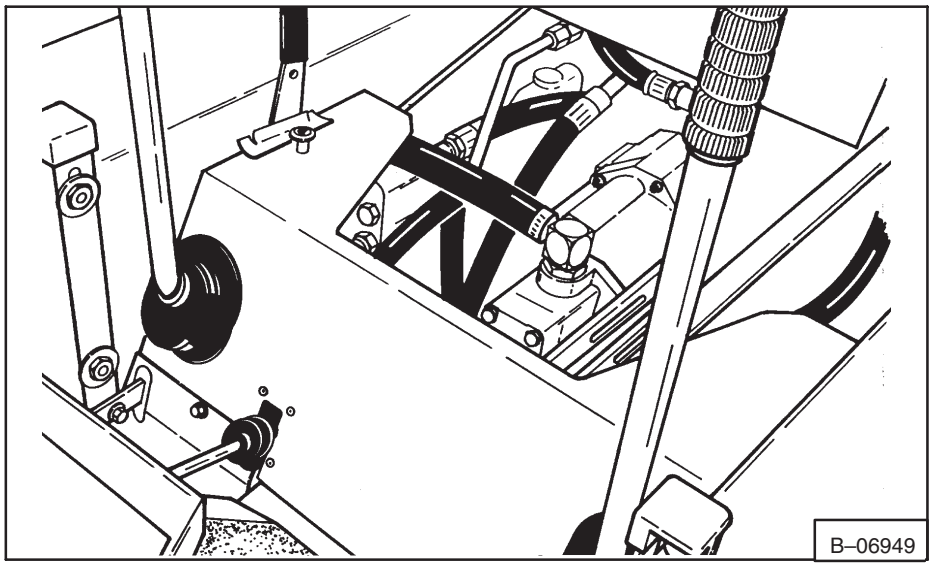

Fig. 3–87 Removing Panel

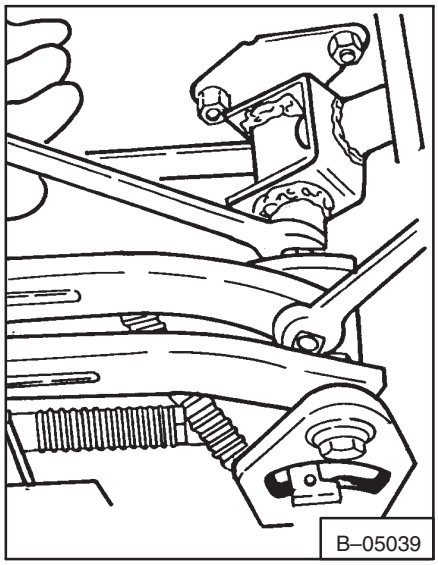

Fig. 3–88 Removing Steering Linkage

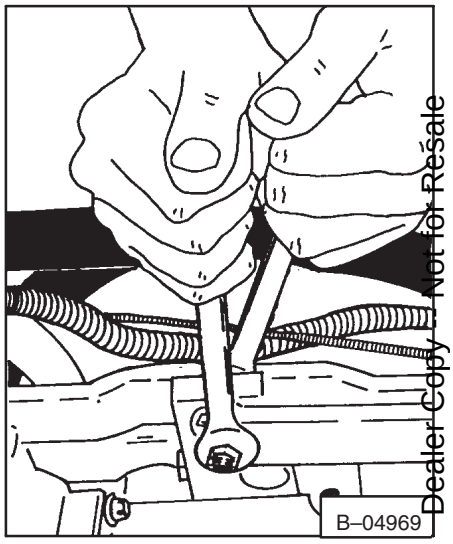

Fig. 3–89 Removing Linkage From Pintle Levers

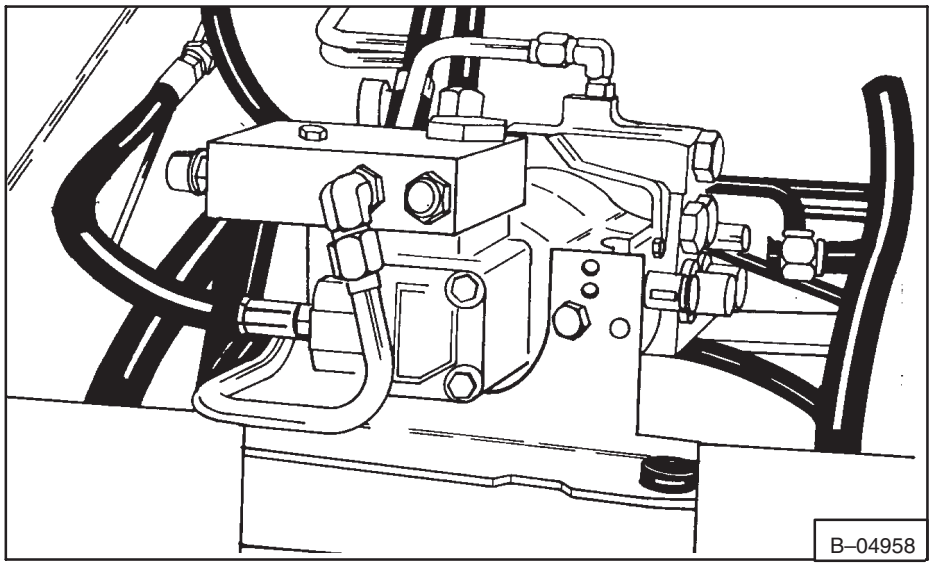

Fig. 3–90 Removing Hydrostatic Pump

1. Raise the operator cab (See Paragraph 5–1, Page 5–1).

2. Drain the hydraulic/hydrostatic reservoir (See Paragraph 1–8.3, Page 1–16).

3. Remove the front panel (Fig. 3–87).

4. Remove the detent linkage.

5. Remove the steering linkage at the steering levers and pintle levers (Fig. 3–88 & 3–89).

6. Disconnect the hose from the port block that goes to the hydraulic/hydrostatic reservoir (Fig. 3–90).

7. Remove the hoses from the port block (Fig. 3–91).

8. Disconnect the high pressure hoses from the hydrostatic pump (Fig. 3–92, 3–93, 3–94 & 3–95).

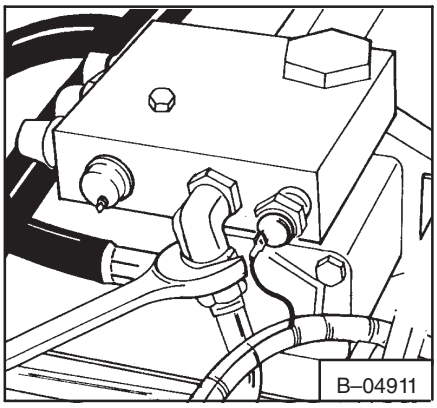

Fig. 3–91 Removing Hoses

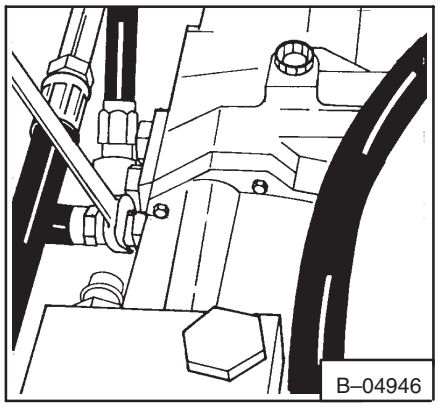

Fig. 3–92 Disconnecting Hoses

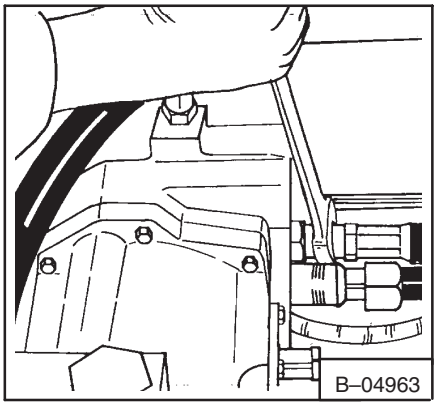

Fig. 3–93 Remove Hose

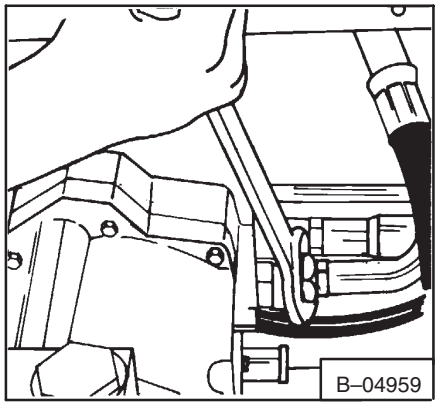

Fig. 3–94 Disconnecting Tubeline

9. Disconnect the wires from the temperature switch on the port block.

10. Remove the bolts (both sides) from the front hydrostatic pump mounts (Fig. 3–96).

NOTE: If the rear pump is to be removed, make sure to note the location of the washers between the mount and frame. These washers must be installed at the correct location to give the pump and engine the correct alignment (Fig. 3–96a).

11. Remove the bolts (both sides) from the rear hydrostatic pump mounts.

12. Move the pump forward and lift up on the pump to remove it from the loader.

13. Remove the spline coupler from the input shaft on the rear of the pump.

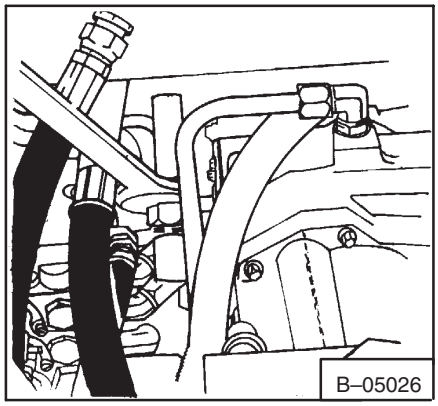

Fig. 3–95 Disconnecting The Hose

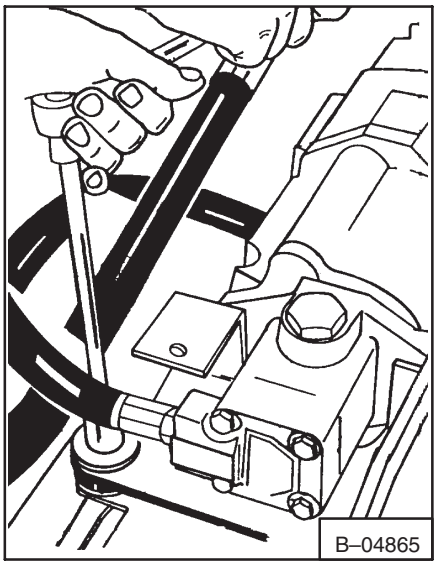

Fig. 3–96 Loosening Mounting Bolts

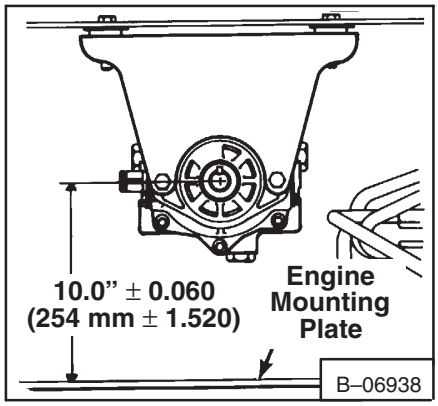

Fig. 3–96a Pump Alignment

3–7.4 Disassembly Of The Hydrostatic Pump

Tools listed

MEL1188 Socket

IMPORTANT

When repairing hydrostatic and hydraulic systems, clean the work area before disassembly and keep all parts clean. Always use caps and plugs on hoses, tubelines and ports to keep dirt out. Dirt can quickly damage the system.

I–2003–0888

NOTE: If O–rings, gaskets and shaft seals are removed, use new parts for assembly.

1. Remove the port block fromthe hydrostatic pump assembly.
2. Remove the front pump mount from the hydrostatic pumps.
3. Put a mark across all the pump sections for correct assembly (Fig. 3–97).
4. Remove the bolts from the hydraulic pump and remove the hydraulic pump from the hydrostatic pumps.
5. Remove the O–ring from the hydraulic pump.
6. Remove the snap ring (Fig. 3–98), collar from spline and vane pump drive shaft.
7. Remove the six bolts that hold the hydrostatic pump to the manifold block (Fig. 3–99).
8. Remove the hydrostatic pump housing (Fig. 3–100).

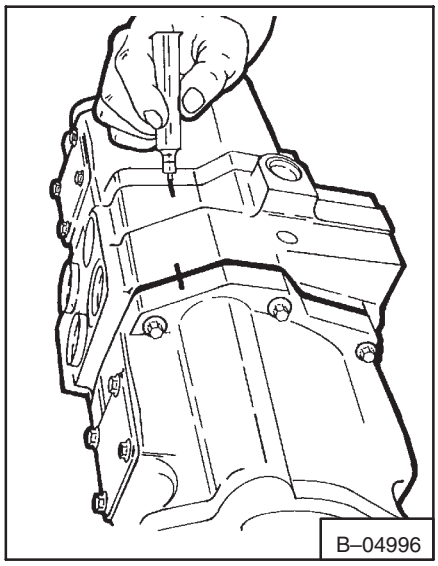

Fig. 3–97 Marking Pump Sections

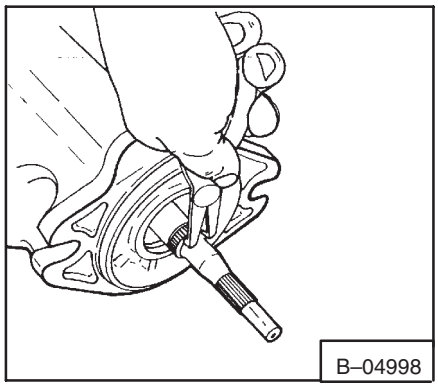

Fig. 3–98 Removing Hydraulic Pump Snap Ring

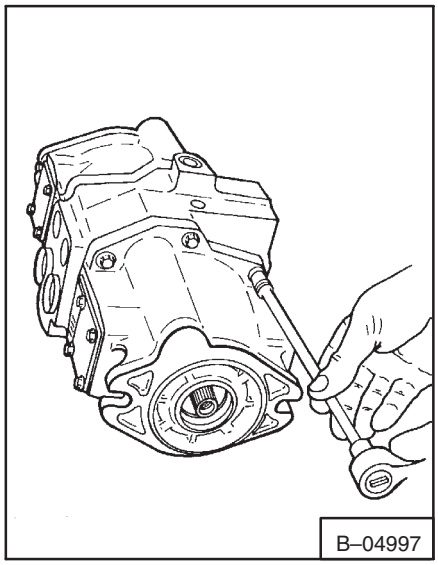

Fig. 3–99 Removing Pump Section Bolts

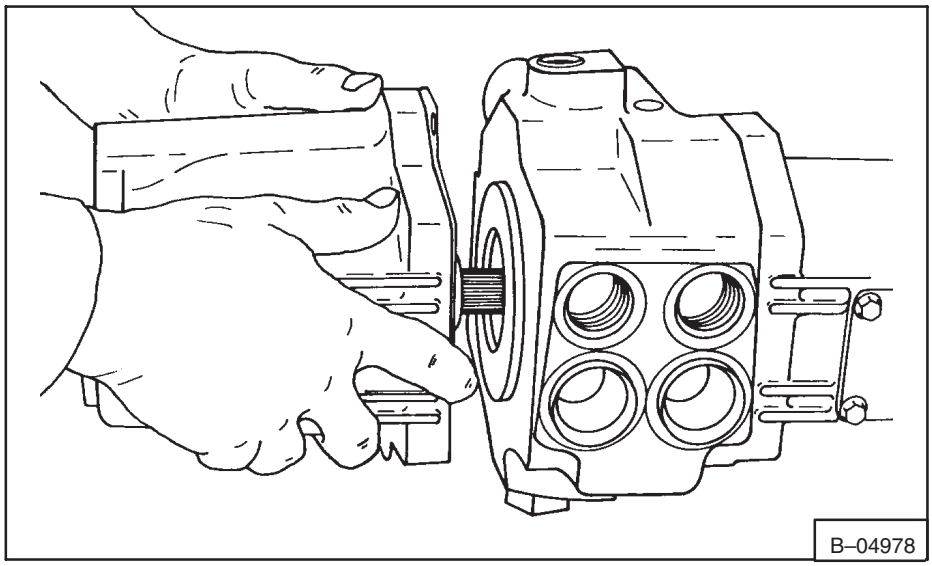

Fig. 3–100 Removing Pump Housing

9. Remove the wafer plate (Fig. 3–101).

10. Remove the gasket, bearing and bearing spacer (Fig. 3–102).

IMPORTANT

Keep all the parts for one pump separate from parts for the other pump.

I–2164–0398

11. Remove the rotating group from the housing. Use both hands to keep pistons from falling out of the cylinder block (Fig. 3–103).

12. Put a mark on one piston and on one cylinder bore (Fig. 3–104) and remove the pistons from the cylinder block.

13. Mark the pintle lever side of the pump housing (Fig. 3–105).

14. Remove the four bolts that hold the pintle covers on each side of the pump housing (Fig. 3–106 & 3–107).

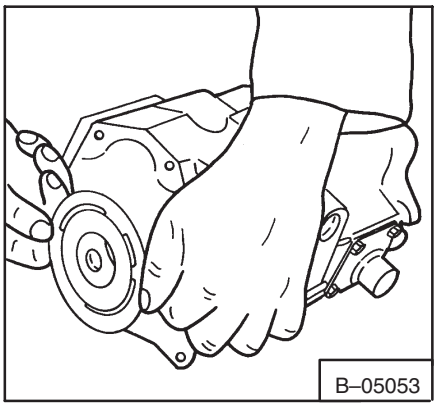

Fig. 3–101 Removing Wafer Plate

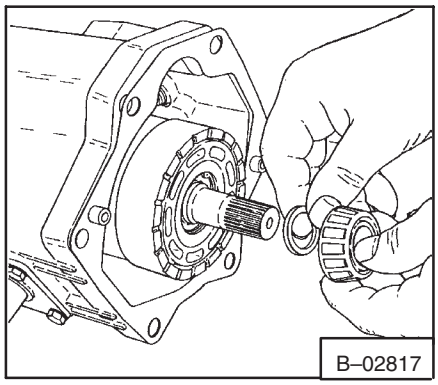

Fig. 3–102 Removing Gasket, Bearing & Spacer

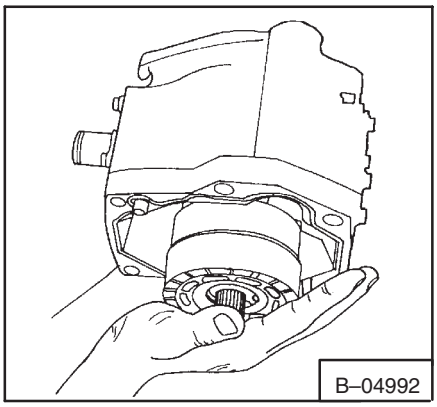

Fig. 3–103 Removing Rotating Group

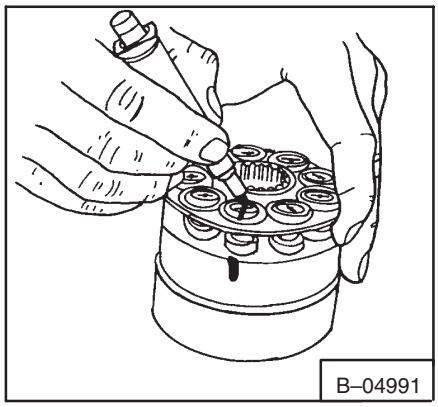

Fig. 3–104 Marking Rotating Group

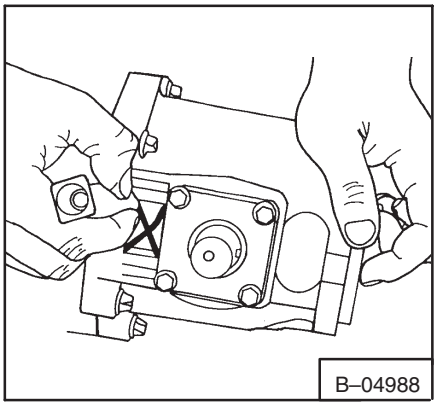

Fig. 3–105 Marking Pintle Side Of Housing

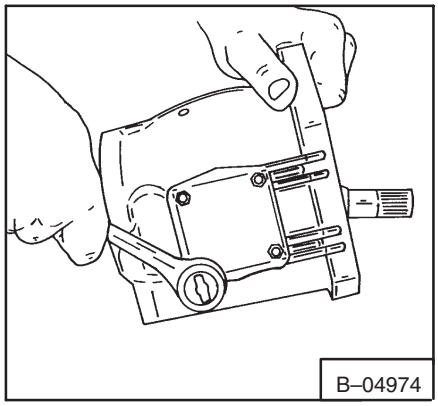

Fig. 3–106 Removing Pintle Cover Bolts

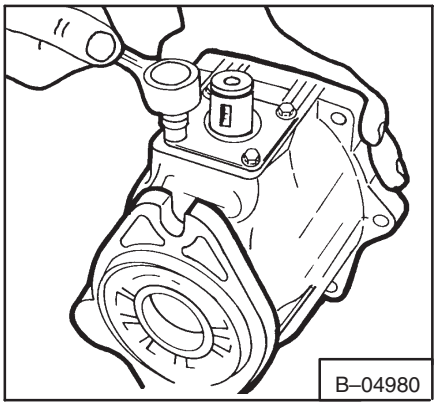

Fig. 3–107 Removing Pintle Cover Bolts

15. Remove the pintle cover and the shims (Fig. 3–108 & 3–109).

IMPORTANT

Avoid damage to the shims under the pintle covers. If shims are damaged, install new shims. Use the procedure given in the manual to install shims.

I–2011–0284

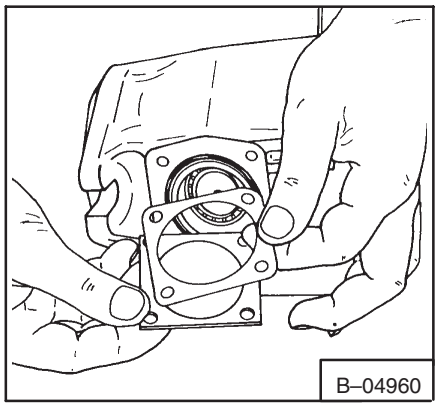

Fig. 3–108 Removing Pintle Cover Bolts

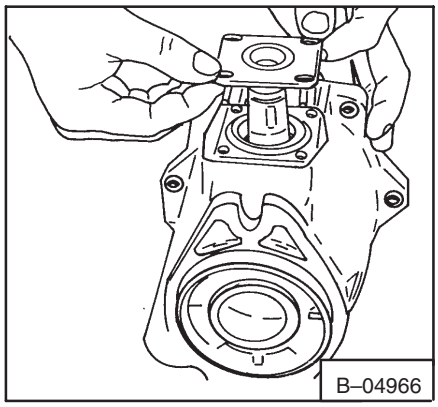

Fig. 3–109 Removing Cover And Shims

16. Remove the O–rings (Fig. 3–110 & 3–111).

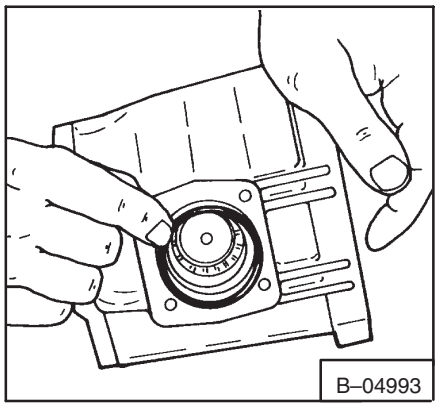

Fig. 3–110 Removing O–Rings

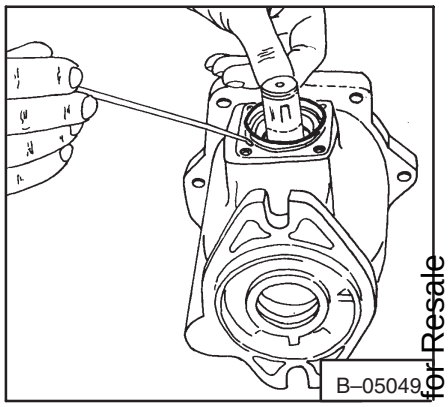

Fig. 3–111 Removing O–Rings

17. Remove the bearing spacers from the pump housing (Fig. 3–112 & 3–113).

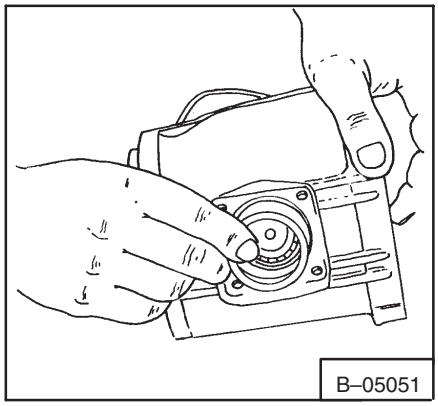

Fig. 3–112 Removing Bearing Spacers

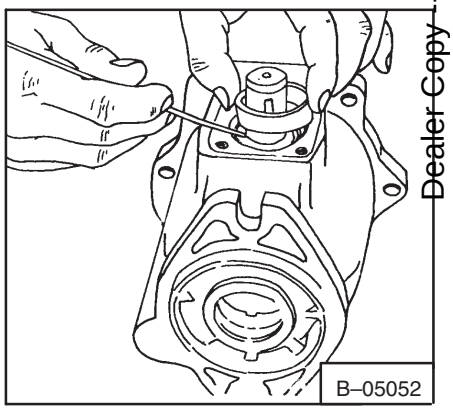

Fig. 3–113 Removing Bearing Spacers

18. Move the yoke from side to side to loosen the bearing races. Remove the races and the bearings (Fig. 3–114).

19. Turn the yoke at an angle and remove the yoke and the shaft together (Fig. 3–115).

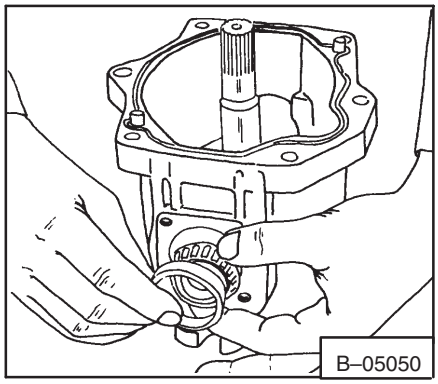

Fig. 3–114 Removing Races And Bearings

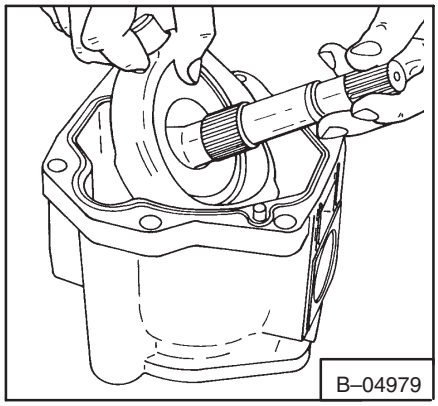

Fig. 3–115 Removing Yoke And Shaft

20. Use a press to remove the bearing from the drive shaft (Fig. 3–116) and bearing race from the housing. Use steps 7 through 8 for disassembly of the other pump unit.

IMPORTANT

Keep parts for each pump separate. Some parts will fit both pumps but must not be used in the other pump because of specific wear patterns.

I–2165–0398

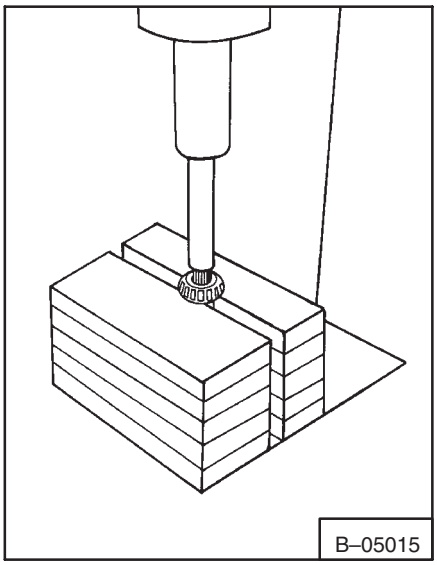

Fig. 3–116 Removing Bearing

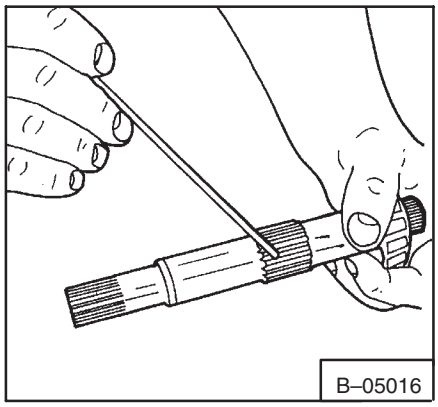

Fig. 3–117 Checking Shaft

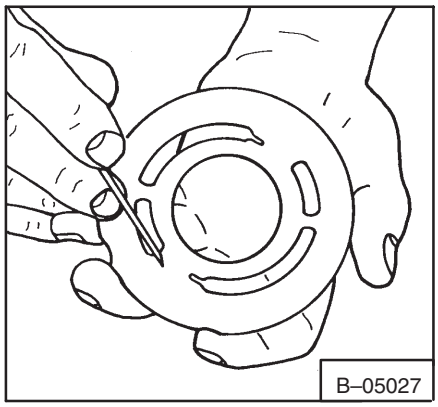

Fig. 3–118 Checking Wafer Plate

3–7.5 Hydrostatic Pump Inspection

1. Check the shaft and collar for wear and damage to the spline (Fig. 3–117).

2. Check the wafer plate for wear and damage (Fig. 3–118). If grooves can be felt on the surface with your fingernail replace the wafer plate. Make sure the wafer plate is flat against the manifold block.

3. Check the bearings for wear and heat damage (Fig. 3–119). Check the bearing spacers for sharp edges.

4. Check each piston in its cylinder (Fig. 3–120). The piston must move easily in the cylinder bore. If the piston does not move easily clean the pistons and the bores and put oil on the pistons and try again.

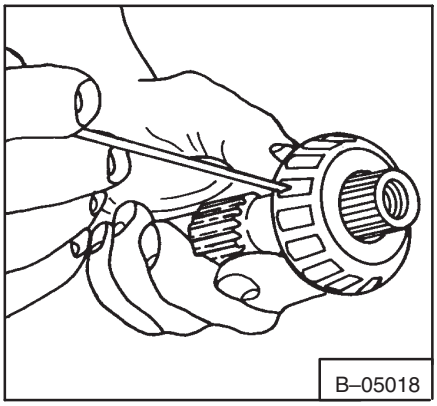

Fig. 3–119 Checking Bearing

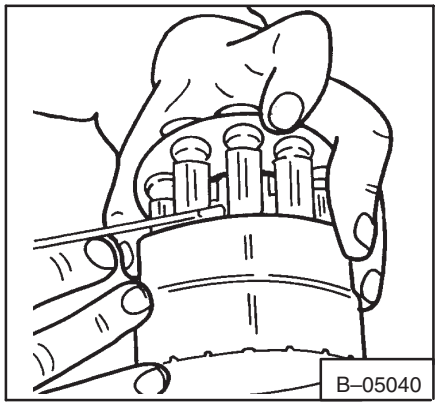

Fig. 3–120 Checking Pistons

5. Check the end play of each piston assembly. End play must not be more than 0.005 inch (0,127 mm) between the piston and the shoe (Fig. 3–121).

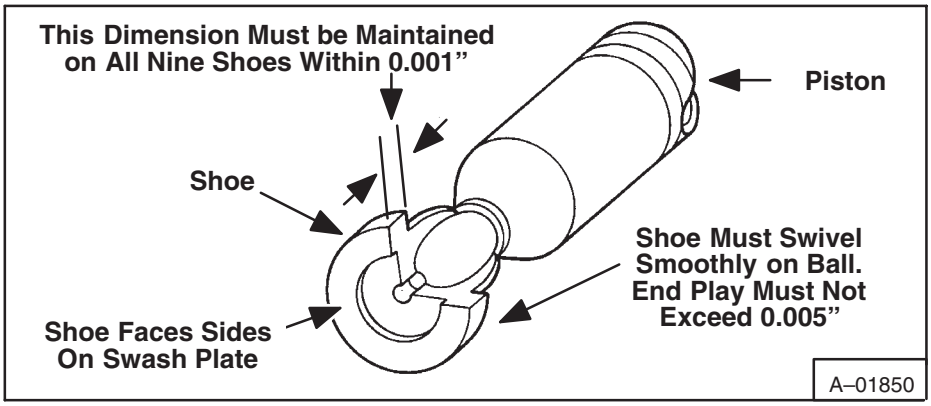

Fig. 3–121 Piston Shoe Dimensions

6. Measure the thickness of each shoe (Fig. 3–121). All shoes must be within 0.001 inch (0,025 mm) of each other.

7. Check the shoe plate for cracks and deep scratches (Fig. 3–122).

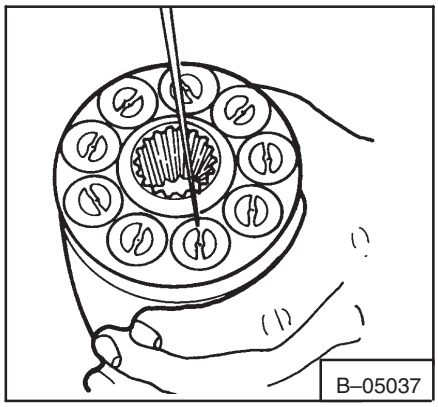

Fig. 3–122 Checking Piston Shoes

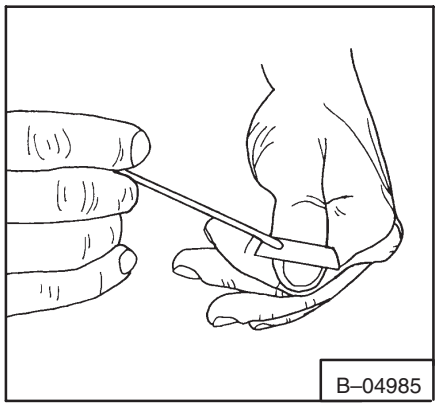

Fig. 3–123 Checking Spherical Washer

8. Check the spherical washer for sharp edges, wear or scratches due to pin breakage (Fig. 3–123).

9. Check the pins for wear or damage. All the pins must be the same length (Fig. 3–124) and must be straight.

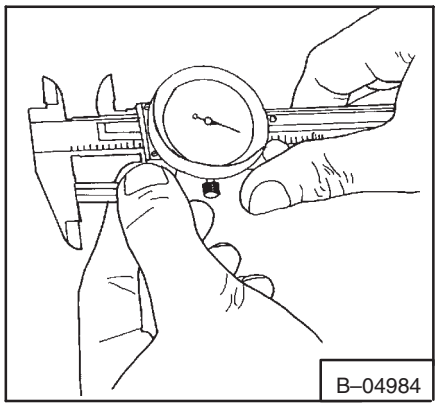

Fig. 3–124 Checking The Pins

10. Check the spring, washer and the snap ring in the cylinder block (Fig. 3–125). If the spring parts are damaged replace the block as a unit. DO NOT disassemble the block.

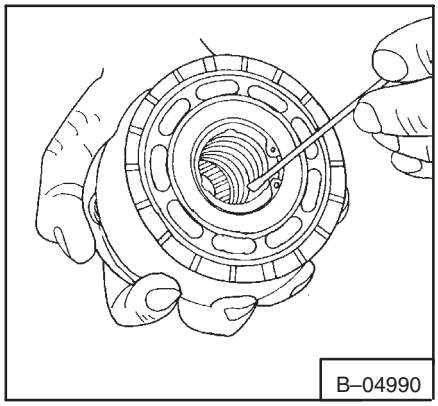

Fig. 3–125 Checking The Spring

If there is any damage to the rotating group the complete unit must be replaced.

11. Check the yoke for wear or damage (Fig. 3–126).

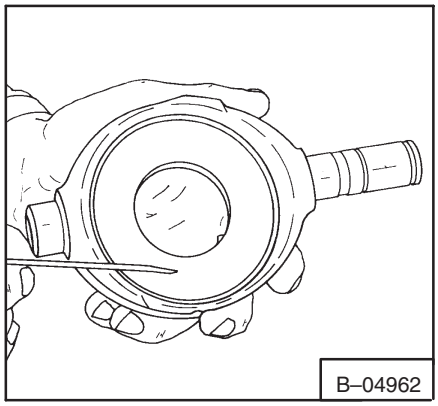

Fig. 3–126 Checking The Yoke

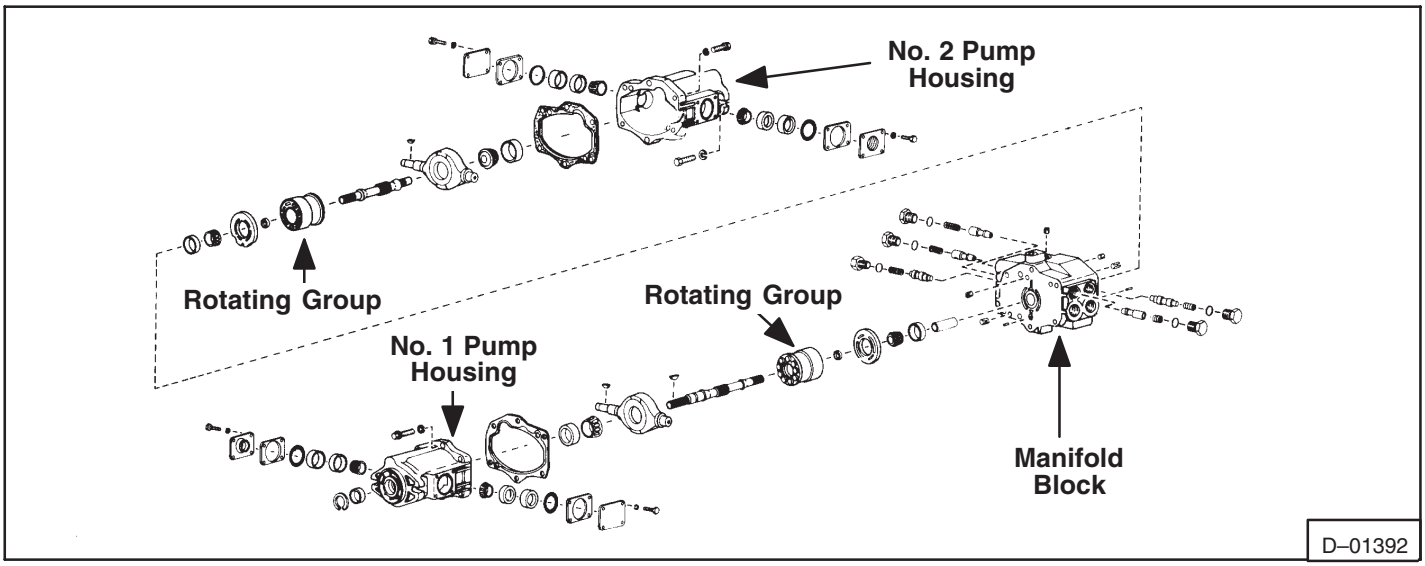

Fig. 3–127 Hydrostatic Pump Assembly

3–7.6 Assembly Of The Hydrostatic Pump (Fig. 3–127)

1. Use a press to install the bearing on the drive shaft and the bearing race into the hydrostatic pump housing. Push the bearing and race until each are against shoulders on the shaft and the housing.

2. Install the drive shaft through the yoke and install the drive shaft and the yoke together into the pump housing (Fig. 3–128).

NOTE: Be sure the long pintle shaft is on the correct side of the pump housing (See Fig. 3–105).

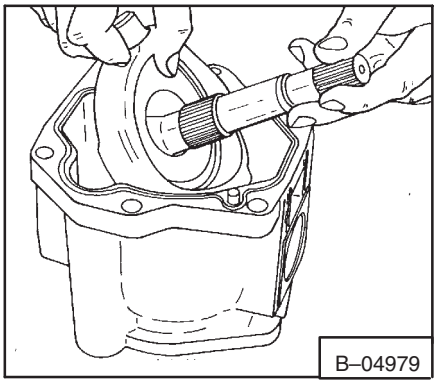

Fig. 3–128 Installing Drive Shaft And Yoke

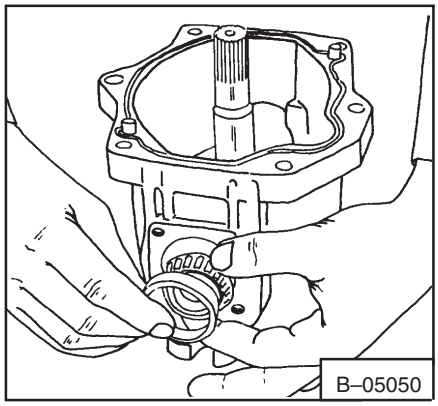

Fig. 3–129 Installing Race And Bearing

3. Install the pintle bearings and the bearing races on each end of the yoke (Fig. 3–129).

4. Install the bearing space on the short pintle shaft (Fig. 3–130).

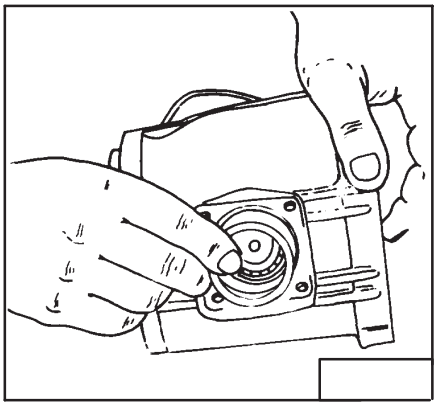

Fig. 3–130 Installing Bearing Spacer

5. Install a new O–ring in the groove (Fig. 3–131).

NOTE: If new bearings and races were installed go to Step 12. If the same bearings and races are being used follow with Step 6 below.

6. Install the exact same shims that were removed (or new shims the same thickness) from pintle cover on the short pintle (Fig. 3–132).

7. Install the four pintle cover screws. Tighten the screws 170–190 in.–lbs. (19,2–21,5 Nm) torque (Fig. 3–133).

8. Install the bearing spacer on the pintle side (Fig. 3–134).

9. Install a new O–ring in the groove (Fig. 3–135).

10. Install the same shims removed under the pintle cover and install the pintle cover/seal on the long pintle shaft (Fig. 3–136).

11. Install four pintle cover screws. Tighten the screws 170–190 in.–lbs. (19,2–21,5 Nm) torque (Fig. 3–137).

12. If new bearings and races were used, do either Procedure One or Procedure Two to set the pre–load.

NOTE: Shims are color–coded to thickness.
Green – 0.003
Blue – 0.005
Brown – 0.010

PROCEDURE ONE

(a) Install one 0.010 inch (0,25 mm) shim under the pintle cover and install pintle cover on the short pintle.

(b) Install four pintle cover screws. Tighten the screws 170–190 in.–lbs. (19,2–21,5 Nm) torque.

(c) Position the housing on the side so that the long pintle shaft is up.

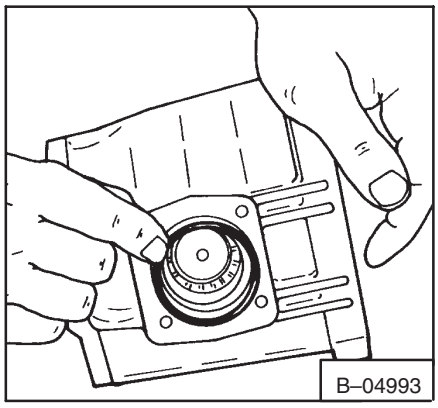

Fig. 3–131 Installing O–Ring

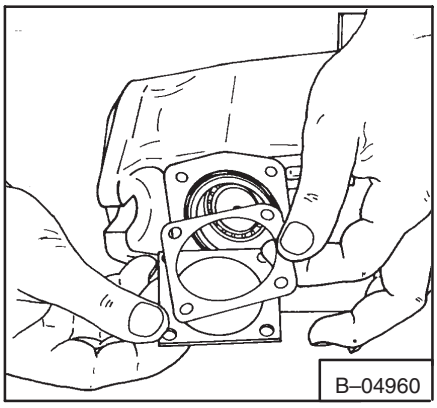

Fig. 3–132 Installing Shims

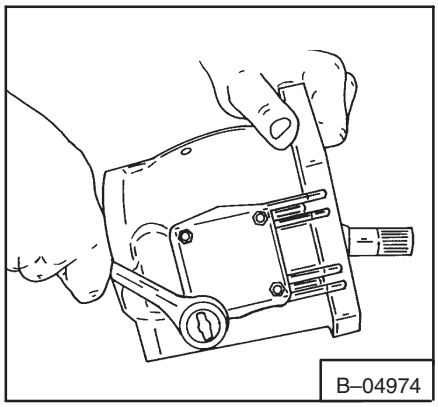

Fig. 3–133 Tightening Bolts

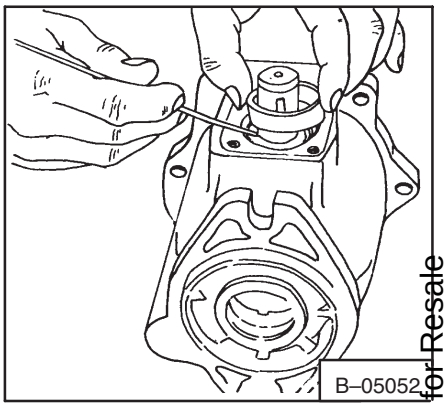

Fig. 3–134 Installing Bearing Spacer

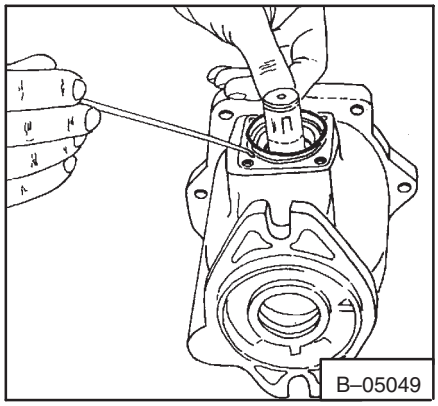

Fig. 3–135 Installing New O–Ring

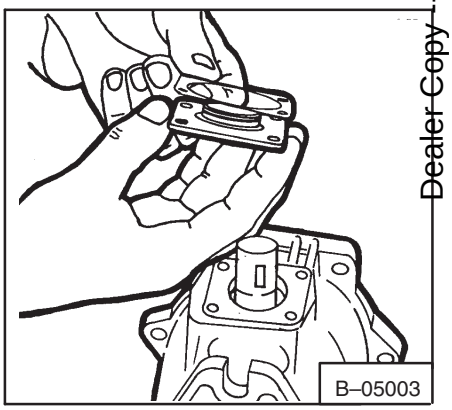

Fig. 3–136 Installing Shims And Seal

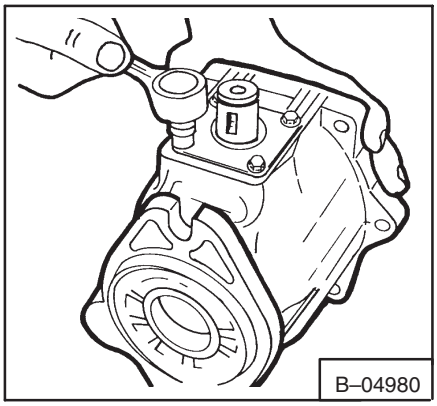

Fig. 3–137 Tightening The Bolts

(d) Install the bearing spacer and turn the yoke while pushing on the spacer so that the bearings and spacers are in correct position (Fig.3–138).

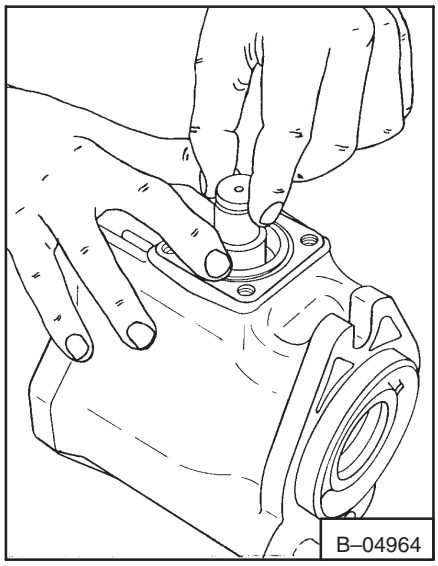

Fig. 3–138 Seating The Bearing

(e) Hold the spacer against the bearing race and measure the distance between the spacer and the surface of the housing. Measure in two different locations 180° apart (Fig. 3–139).

(f) Add the two dimensions and divide by 2 to get an average. Subject the nominal preload of 0.008 inch (0,0203 mm), 0.007 to 0.009 inch (0,178–0,229) actual from that average. The remainder after subtracting is the thickness of the shim needed to give the correct preload on the bearings.

EXAMPLE (In Inches):

0.029 Measured distance between the spacer and the housing surface
+ 0.027 Measured distance at 180° from first measurement
= 0.056

0.056 Divided by 2 equals 0.028 Average
0.028 Minus 0.008 (Nominal Preload) equals 0.020
0.020 Is the thickness of shim needed

NOTE: If the thickness becomes more than 0.020 inch (0,508 mm) add another shim to the short pintle side and follow steps d thru f again. This is necessary to give correct compression of the O–ring and prevent leakage at the seal.

(g) Install the pintle cover/seal on the long pintle shaft (Fig. 3–136).

(h) Install the four pintle cover screws. Tighten the cover screws 170–190 in.–lbs. (19,2–21,5 Nm) torque.

Use the same procedure to install the yoke and the bearings in the other pump.

NOTE: The yoke must have a small amount of resistance butmust not move hard or with no resistance.

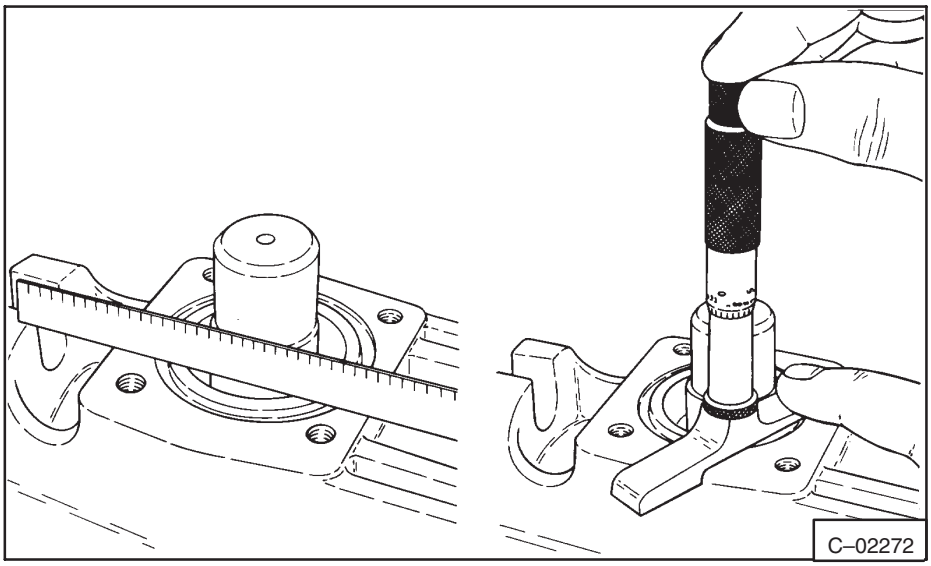

Fig. 3–139 Checking Preload

NOTE: If the shaft bearings, shaft, valve block, housing or the spacer were not installed new, use the same parts that were removed and go to Step 2. If any new parts are used start with Step 1.

13. Adjust the bearing preload using kit P/N.

(a) Install the thickest bearing spacer over the shaft with the chamfer toward the shoulder on the shaft (Fig. 3–140).

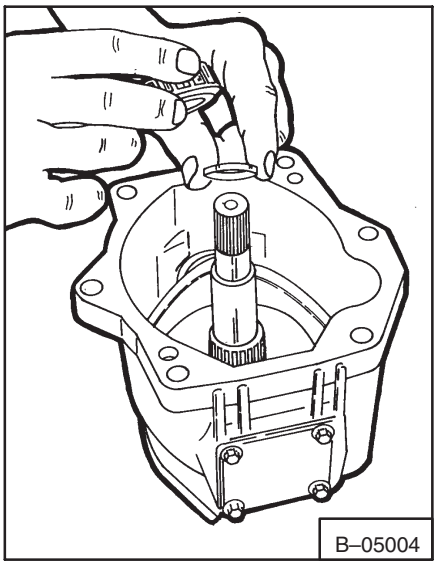

Fig. 3–140 Installing Spacer

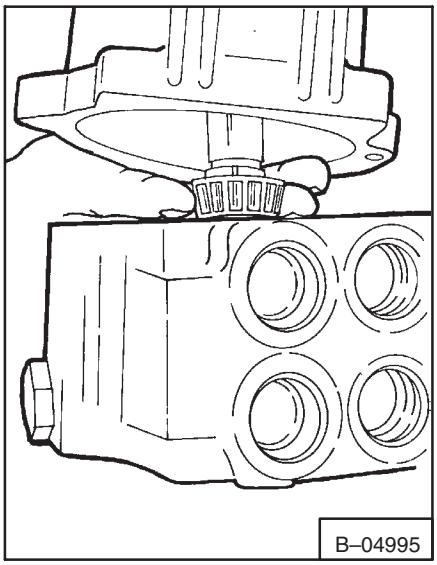

Fig. 3–141 Installing The Housing

(b) Install the bearing on the shaft and against the spacer. The small end of the tapered bearing goes toward the manifold block (Fig. 3–140.

(c) Install the housing on the manifold block without gasket and the rotating group (Fig. 3–141). Turn the shaft while installing so the bearings are in the correct position.

(d) Temporarily install the vane pump shaft into the intermediate shaft (Fig. 3–142). This step is not needed on the rear pump.

(e) Install four screws in the four corners and tighten finger-tight only. Tighten the screws evenly so that the gap is as even as possible.

(f) Use a feeler gauge to check the gap (Fig. 3–143). A tapered feeler gauge is very good for this purpose. Measure the gap at four different corners. Add the four dimensions together and divide by four to get an average gap dimension.

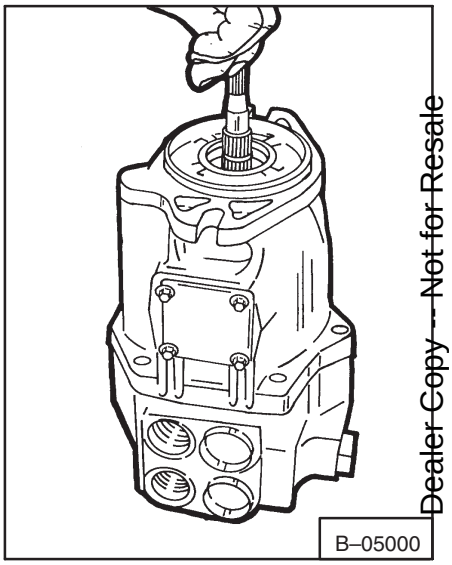

Fig. 3–142 Installing The Shaft

EXAMPLE (In Inches):

	0.150	Measured thickness of the thickest bearing spacer
–	0.027	Average gap (from above)
+	0.003	± 0.001 necessary preload
+	0.020	Compressed thickness of the gasket
=	0.146	± 0.001 thickness of the bearing spacer needed to give 0.002 to 0.004 bearing preload

(g) Remove the four screws and remove the housing from the manifold so that the correct spacer gasket and internal parts can be installed.

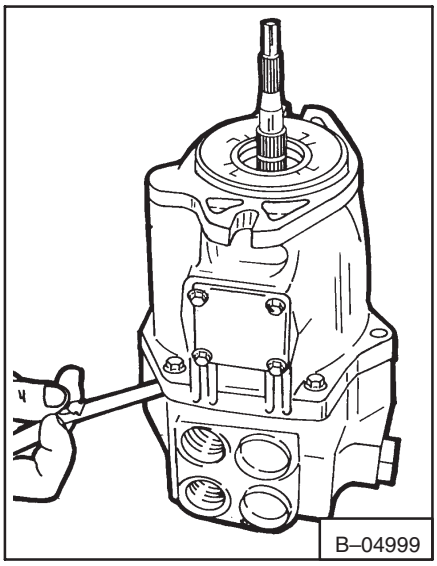

Fig. 3–143 Checking The Gap

PROCEDURE TWO (Alternate Method)

(a) A tool is necessary for the following procedure. To make the tool, weld a 0.250 inch NF nut toward the top on the outside of an old bearing race spacer. Cut the head off a 0.250 inch x 3.0 inches NF bolt and install it in the nut on the spacer. Connect a dial indicator to the bolt.

(b) Install one 0.010 inch (0,256 mm) shim under the pintle cover and install the pintle cover on the short pintle.

(c) Install the four pintle cover bolts. Tighten the bolts to 170–190 in.–lbs. (19–22 Nm) torque.

(d) Put the housing on its side with the long pintle shaft up.

(e) Install the bearing spacer and turn the yoke while pushing on the spacer so that the bearing and spacers are in correct position (Fig. 3–138).

(f) Put the tool on a flat machined surface. Push down on the tool and set the dial indicator at zero (Fig. 3–143a).

(g) Put the tool against the spacer on the bearing race (Fig. 3–143b) and record the reading on the dial indicator.

(h) Subtract the nominal pre–load of 0.008 inch (0,203 mm) (actual pre–load is 0.007–0.009 inch (0,178–0,229 mm) from the reading found in step f. The remainder is the thickness of shim needed to give the correct pre–load on the bearings.

EXAMPLE (In Inches):

	0.028	Measure distance between the spacer and the housing surface
–	0.008	Nominal Pre–load
=	0.020	Thickness of shim needed

NOTE: If the thickness becomes more than 0.020 inch (0,508 mm) add another 0.010 inch (0,254 mm) shim to the short pintle side and subtract a 0.010 inch (0,254 mm) shim from the long pintle side. This is necessary to give the correct compression of the O–ring and prevent leakage at the seal.

(i) Install a new O–ring in the groove (Fig. 3–135).

(j) Install the pintle cover/seal on the long pintle shaft (Fig. 3–136).

(k) Install the four pintle cover bolts. Tighten the bolts to 170–190 in.–lbs. (19–22 Nm) torque.

NOTE: Use the same procedure to install the yoke and the bearings in the other hydrostatic pump.

The yoke must have a small amount of resistance but must not move hard or with no resistance.

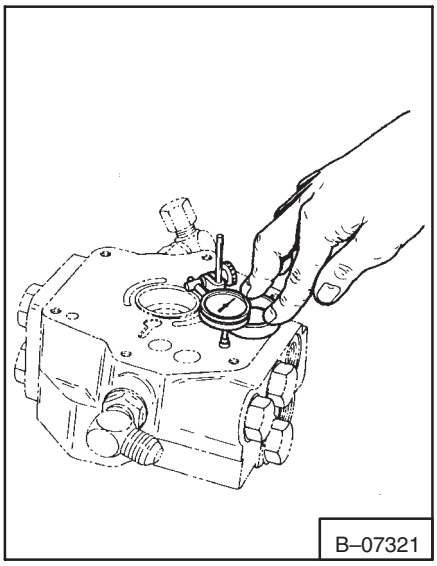

Fig. 3–143a Setting Tool At Zero

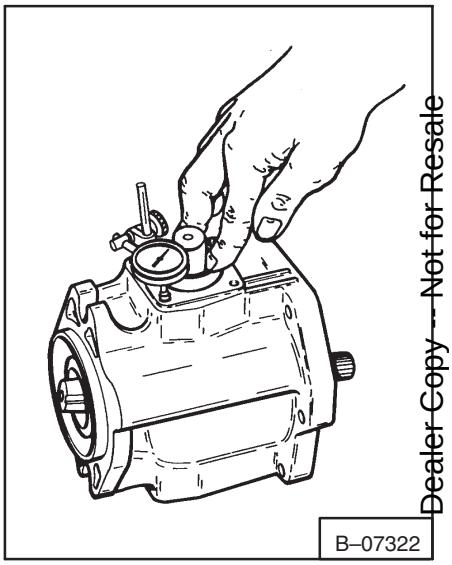

Fig. 3–143b Checking Pre–Load

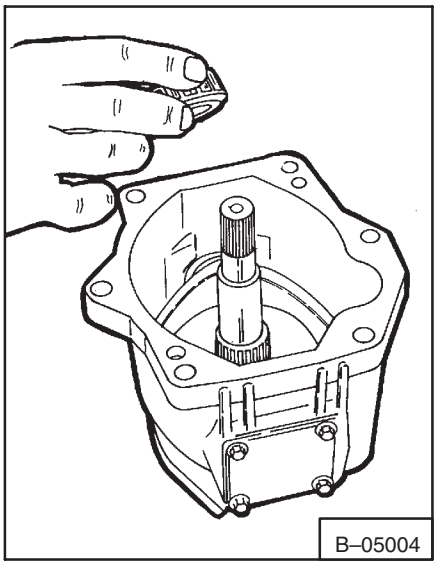

Fig. 3–143c Installing spacer

NOTE: If the shaft bearings, valve block, housing or the spacer were not installed new, use the same parts that were removed and go to Step 15. If any new parts are used, start with Step 14.

14. Use the following procedure to adjust the bearing pre–load on thehousing.

(a) Install the bearing on the shaft with the small end of the taper toward the manifold block (Fig. 3–143c). DO NOT install the pre–load spacer that goes against the shaft shoulder.

(b) Use an old gasket so that the gasket to be used during assembly does not become damaged. Install the housing on the manifold block without the wafer plate and without the rotating group (Fig. 3–143d). Turn the shaft as the housing is installed so the bearings are in the correct position.

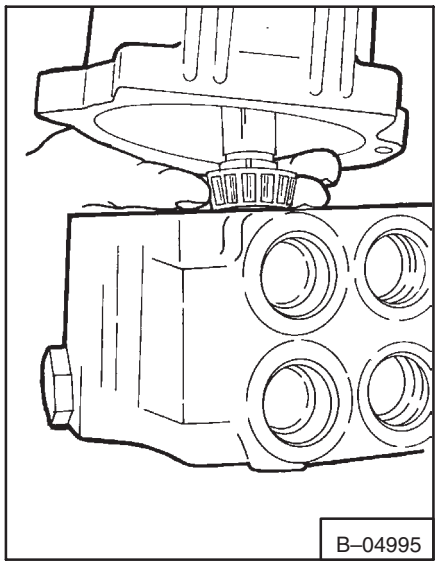

Fig. 3–143d Installing The Housing

(c) Install the four bolts in the corners and tighten to the torque specified for assembly.

(d) Install the dial indicator above the shaft andset it at zero (Fig. 3–143e).

(e) Pull the shaft up as far as it will go and record the reading on the dial indicator. Repeat this step each time several times. The reading must be the same each time.

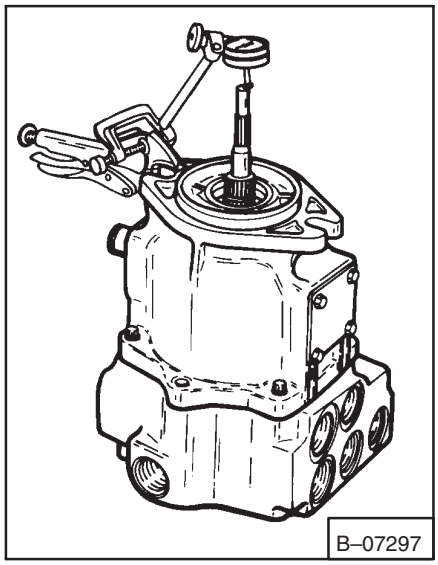

Fig. 3–143e Checking Pre–Load

(f) Add the nominal pre–load of 0.003 inch (0,076 mm) (actual pre–load is 0.002–0.004 inch (0,051–0,102 mm) to the reading found in step e. The total is the required thickness of the spacer that goes between the bearing and the shaft shoulder.

EXAMPLE (In Inches):

0.150 Measured movement of the shaft
+ 0.003 Nominal pre–load
= 0.153 ± thickness of spacer needed

(g) Remove the four bolts and remove the housing from the manifold so that the correct spacer, gasket and internal parts can be installed.

NOTE: Lubricate all moving parts before assembly.

15. Install the pin retainer about 0.250 inch (6,35 mm) below the surface withe opening away from the large splines (Fig. 3–144).

16. Push the three pins in the cylinder block until each pin hits the spring washer in the block (Fig. 3–145).

17. Put the spherical washer on top of the three pins (Fig. 3–146). Install the shoe plate and the pistons. Be sure you put marked piston into the marked hole (Fig. 3–147). Be sure all the pistons move freely in the cylinder bores.

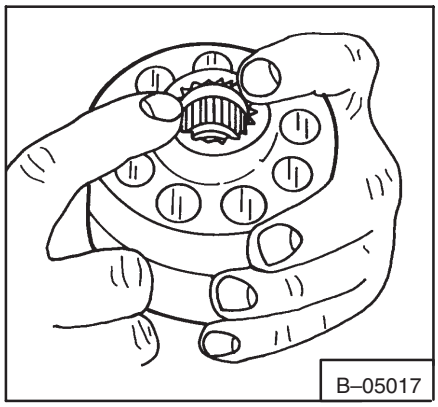

Fig. 3–144 Installing Pin Retainer

18. Hold the intermediate shaft horizontal and move the rotating group into the housing. Turn the shaft until the splines are in alignment.

19. Install the correct spacer (use the original spacer if no new parts are used) on intermediate shaft with the chamfer toward the shoulder on the shaft.

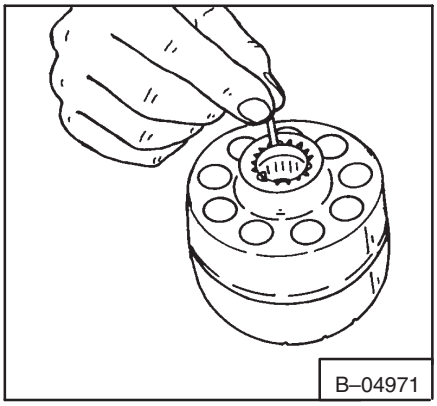

Fig. 3–145 Installing Pins

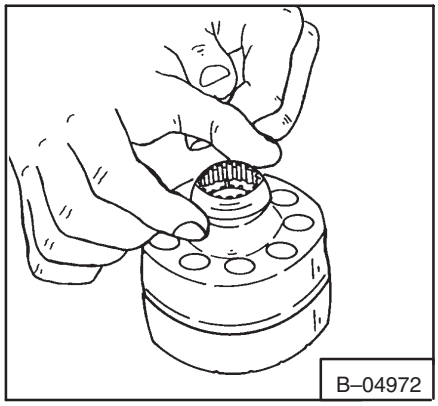

Fig. 3–146 Installing Spherical Washer

20. Install the tapered bearing with the small end toward the manifold block.

21. Install two roll pins and a new gasket.

22. Put assembled unit in a clean area until final assembly.

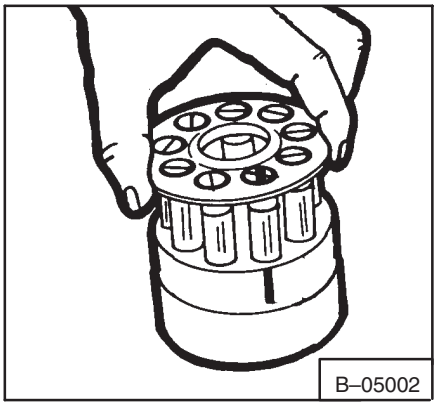

Fig. 3–147 Installing Pistons

3–7.7 Installing Pumps To Manifold Block

1. Install the wafer plate locating pins in the manifold block.

2. Install the wafer plate (For #1 housing). The wafer plate must be flat against the manifold block by aligning the pin with the chamfered area of the wafer plate (Fig. 3–148).

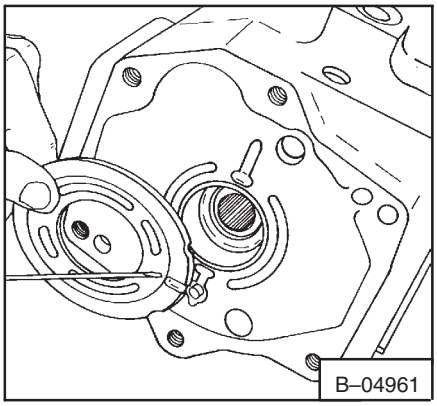

Fig. 3–148 Installing Wafer Plate

IMPORTANT

Use the correct wafer plate (Fig. 3–149). Plates with two or four feathering grooves (Fig. 3–149, Item 1) are interchangeable, but front and rear plates are not interchangeable.

I–2166–0398

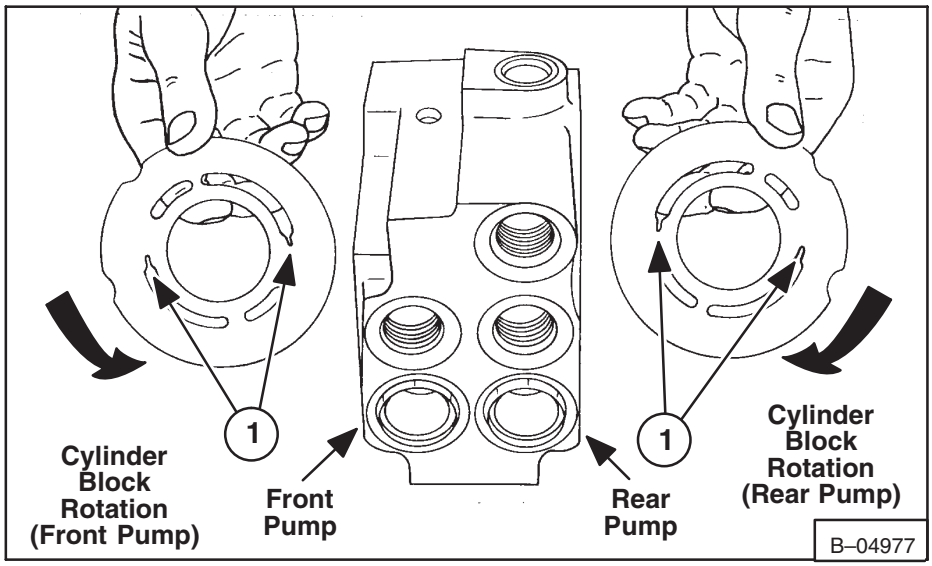

Fig. 3–149 Correct Wafer Plate

3. Put the splined coupler on the drive shaft (Fig. 3–150).

4. Make sure the gasket and the alignment pins are in the correct location and install the housing on the manifold block.

5. Install the six screws and tighten 23–26 ft.–lbs. (31–35 Nm) torque.

6. Turn the vane pump shaft in the intermediate shaft until it is against the shoulder. Then turn the vane pump shaft out to align the splines.

7. Put the splined coupling over the splines on the intermediate shaft and the vane pump shaft.

8. Install the snap ring in the groove on the vane pump shaft.

9. Install the wafer plate (For #2 housing). The wafer plate must be flat against the manifold block.

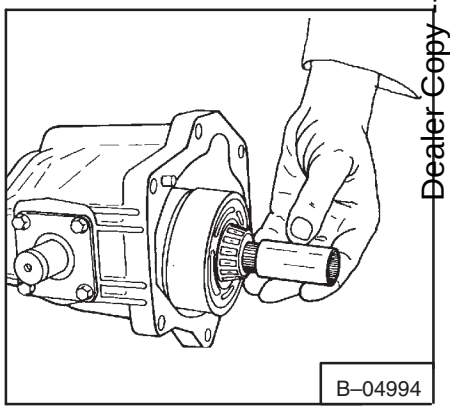

Fig. 3–150 Installing Coupler

IMPORTANT

Use the correct wafer plate (Fig. 3–149). Plates with two or four feathering grooves (Fig. 3–149, Item 1) are interchangeable.

I–2166–0398

10. Make sure the gasket and the alignment pins are in position and install the housing on the manifold block. Turn the vane pump shaft so that the splines are in alignment.

11. Install the six screws and tighten 23–26 ft.–lbs. (31–35 Nm) torque.

12. Install the large O–ring on the end of the #2 housing and install the vane pump.

13. Install the two screws to hold the vane pump and tighten 54–66 ft.–lbs. (73–89 Nm) torque.

3–7.8 Installing Hydrostatic Pump Assembly

1. Install the front pump mount, note number of washers removed.
2. Lower the pump assembly into position on transmission case and guide the spline pump drive shaft and coupling yoke into engagement.
3. Install the bolts in the rear pump mount and the front mount. Fasten the pump assembly to the rear mount (Using two bolts).

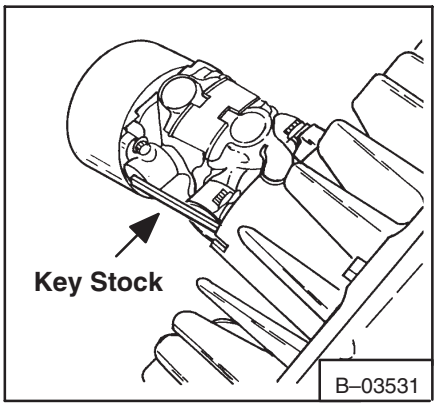

Fig. 3–151 U–Joint Alignment

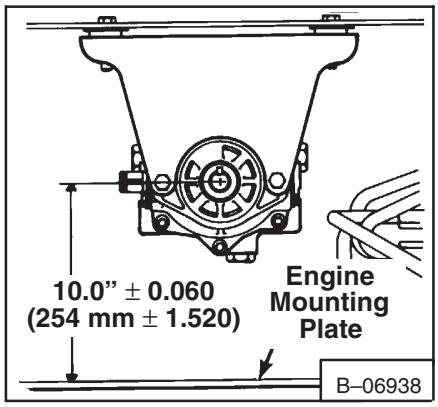

Fig. 3–152 Pump Alignment

4. Put a flat metal (Example: Key Stock) against the spiders on the drive coupler, to check coupling alignment (Fig. 3–151).
5. Loosen engine mounts if necessary and move engine to make alignment of drive coupler.
6. If the height alignment is not correct, add or subtract half thickness washers at the rear pump mount. Correct height specifications for pump drive is shown in figure 3–152.

NOTE: Measure from engine mounting plate to center of pump shaft. Also measure engine distance to center of the flywheel, the two dimensions must be as close as possible.

7. Check engagement of coupling onto spline. Maximum clearance between pump drive flange and yoke is 0.250 inch (6,35 mm).

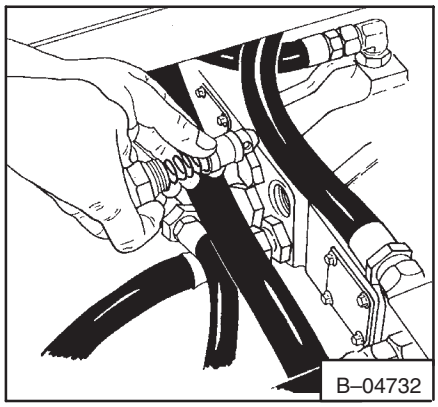

Fig. 3–153 Removing Relief Valve

3–8 TOWING THE BOBCAT LOADER

The tool listed will be needed to do the following procedure:

MEL1179.2 – Towing Tool

3–8.1 Towing The Bobcat Loader

1. Use cleaning solvent and compressed air to clean the area around the two high pressure relief valves on the hydrostatic pumps.

IMPORTANT

When repairing hydrostatic and hydraulic systems, clean the work area before disassembly and keep all parts clean. Always use caps and plugs on hoses, tubelines and ports to keep dirt out. Dirt can quickly damage the system.

I–2003–0888

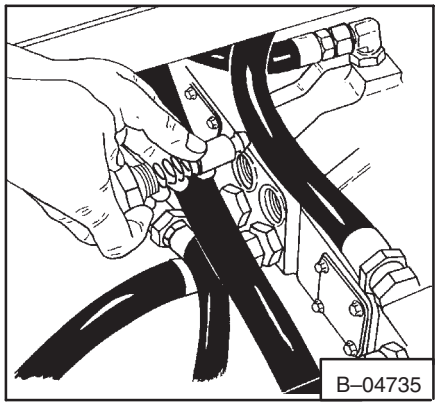

Fig. 3–154 Removing Rear Relief Valve

2. Remove one plug, spring and high pressure relief valve from the front pump (Fig. 3–153) and remove the same from the rear pump (Fig. 3–154).
3. Install the tools (Fig. 3–155, Items 1 and 2) and then install only the plugs. Tighten the plugs.
4. Now the loader can be moved (towed) at a slow speed (2 MPH [1,6 km/hr]) for a short distance such as 75 to 100 feet (23 to 30 mm).
5. To remove the tool, first remove the plug, then install the small bolt (supplied with tool) into the end of the tool and pull it out.

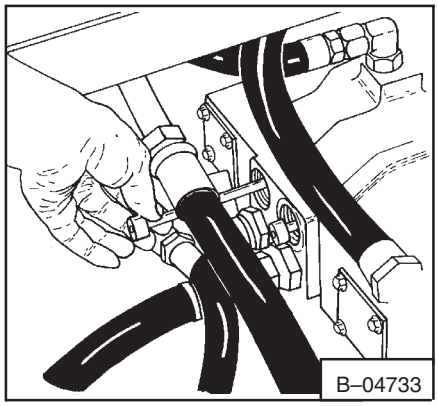

Fig. 3–155 Installing Tool

DRIVE SYSTEM

WARNING

Instructions are necessary before operating or servicing machine. Read Operation & Maintenance Manual, and signs (decals) on machine. Follow warnings and instructions in the manuals when making repairs, adjustments or servicing. Check for correct function after adjustments. repairs or service. Failure to follow instructions can cause injury or death.

W–2144–0189

bobcat®

4 DRIVE SYSTEM

4–1 BRAKES

⚠ WARNING

Before you leave the operator's seat:

- **Lower the mast.**
- **Stop the engine.**
- **Engage the parking brake.**

Failure to obey warnings can cause injury or death.

W–2094–1285

When the brakes are in good condition and adjusted correctly they will keep the loader from moving when in parked position.

4–1.1 Brake Adjustment

1. There must be 0.250 inch (6,36 mm) of movement under the bottom edge (heel) of the brake pedal (Fig. 4–1). This is done by first loosening the jam nut (Fig. 4–2, Item 1) and then turning the nut on the end of the linkage rod (Fig. 4–2, Item 2). The brake pucks must make contact with the brake discs when the pedal is moved 0.250 inch (6,36 mm), but not be fully engaged.

2. If adjustment cannot be obtained by turning the nut the cam pin must be turned.

3. Remove the brake lever (Fig. 4–3, Item 1).

4. Turn the cam pin (Fig. 4–3, Item 2) counterclockwise until the brake pucks (Fig. 4–3, Item 3) make contact with the brake discs (Fig. 4–3, Item 4).

5. Put the brake linkage rod (Fig. 4–3, Item 5) into the brake lever.

6. Without putting the brake lever onto the cam pin install the linkage rod into the brake pedal.

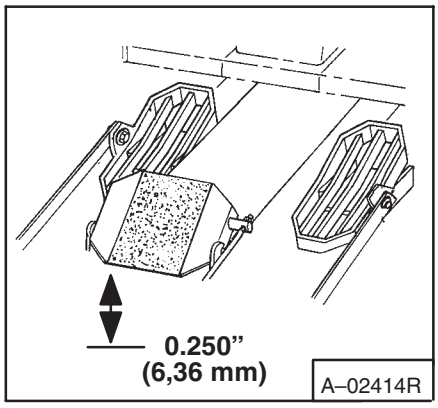

Fig. 4–1 Brake Pedal

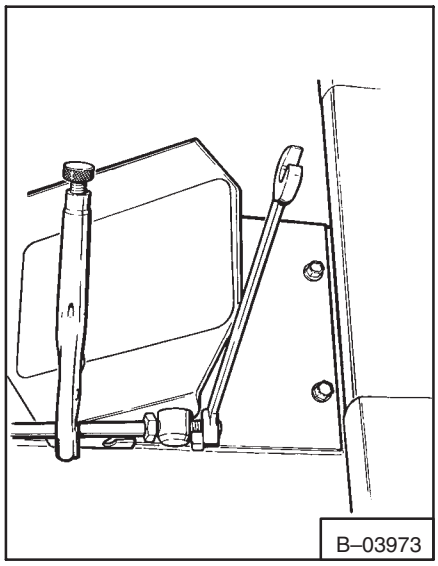

Fig. 4–2 Brake Pedal Adjustment

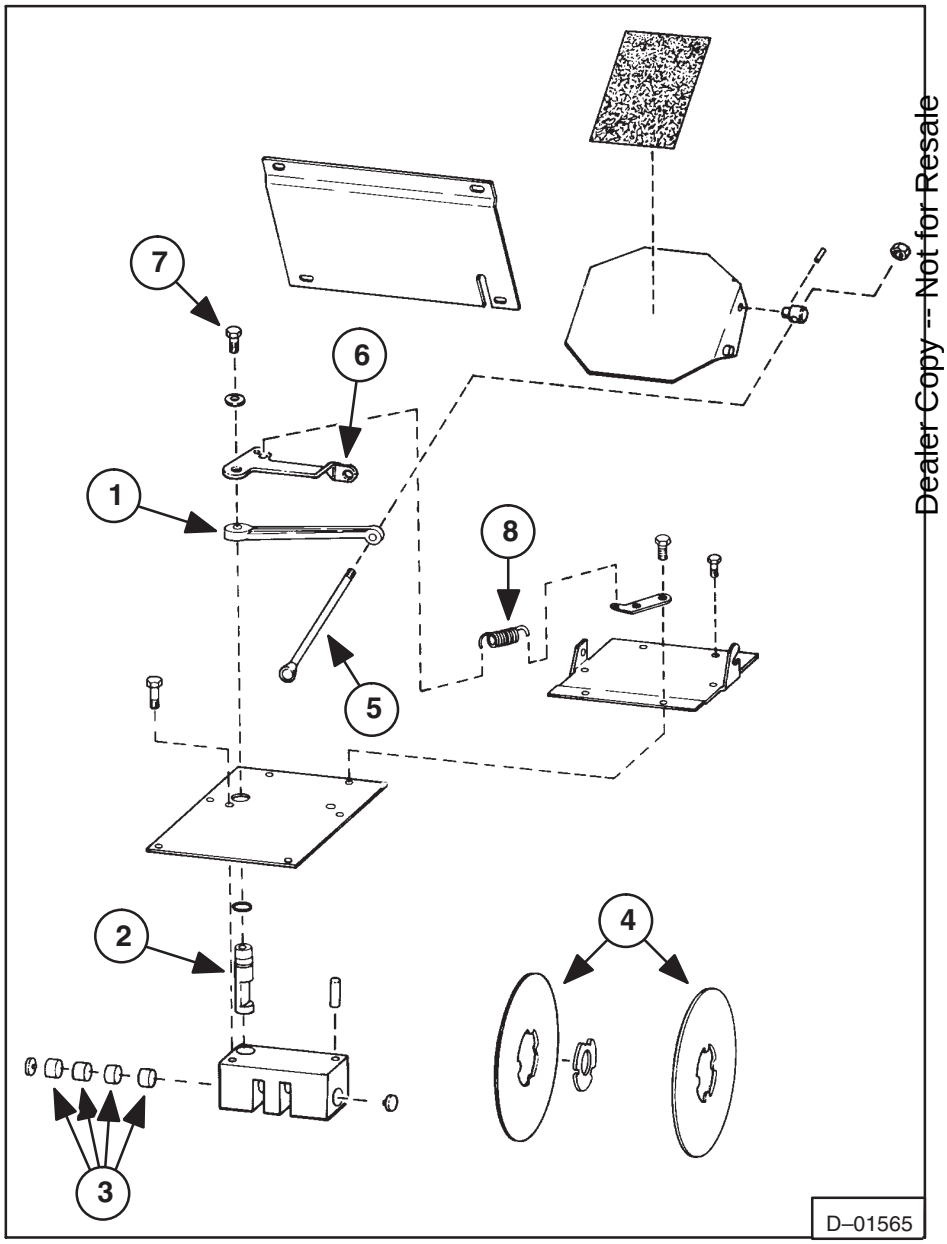

Fig. 4–3 Brake Assembly Breakdown

7. When there is 1.0 inch (25,4 mm) of threads showing on the brake linkage rod, install the brake lever onto the cam pin. the brake pucks must still be making contact with the brake discs.

8. Install the bracket (Fig. 4–3, Item 6). Install the bolt (Fig. 4–3, Item 7) and tighten 65–70 ft.–lbs. (88–95 Nm) torque.

9. Install the brake spring (Fig. 4–3, Item 8).

10. Install the nut on the linkage rod and adjust the brake (See Step 1 for adjustment).

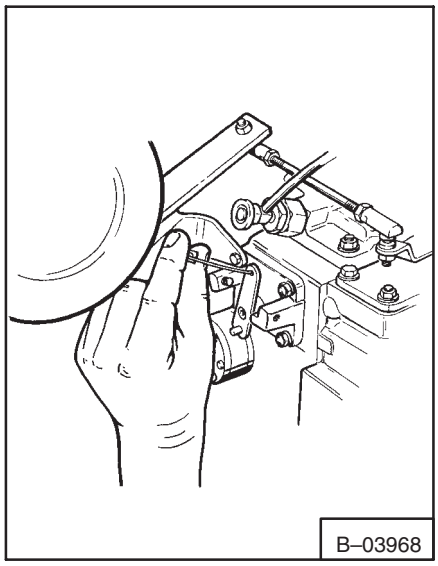

Fig. 4–4 Fuel Cable

4–1.2 Brake Removal

The tools listed will be needed to do the following procedure:

MEL1028

1. Raise the Operator Guard (See Paragraph 5–1, Page 5–1).

2. On the 643, disconnect the fuel shut–off cable from the engine (Fig. 4–4). On the 642, remove the choke cable from the engine.

3. Remove the control shields, steering levers (Fig. 4–5) and the linkages.

4. Remove both transmission covers and the brake block assembly.

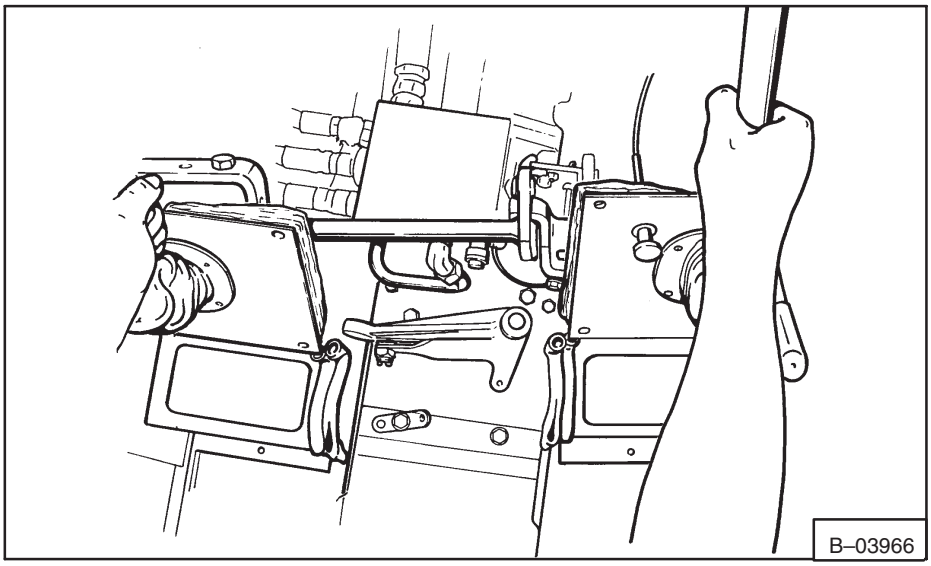

Fig. 4–5 Removing Control Levers

IMPORTANT

Be careful not to damage the gasket when removing the transmission covers.

I–2118–1196

NOTE: It will be easier to install the brake assembly if you remove the front mounting bolts for the hydrostatic pump, then install a spacer under the pump to hold the pump up.

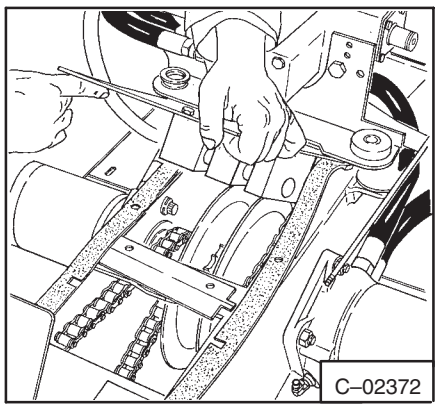

Fig. 4–6 Removing Transmission Cover

To remove the brake discs:

5. Push the brake disc back on the sprocket and turn it until the lobes on the disc will pass the lobes on the retaining washer (Fig. 4–8).

6. Pull the disc off over the retaining washer and the sprocket nut.

7. If the disc will come out of the loader between the sprocket nuts, remove the other disc in the same manner. If the disc will not come out of the loader between the two sprocket nuts, use the following steps.

8. Use a chain breaker (Special Tool MEL1045) to break the right rear drive chain. Break the chain at the connector link if possible. If there is no connector link, break the chain at any link.

9. Loosen the right hydrostatic motor (Fig. 4–9) from the transmission case and move the motor out. Move the motor only far enough to pull the brake discs out of the load.

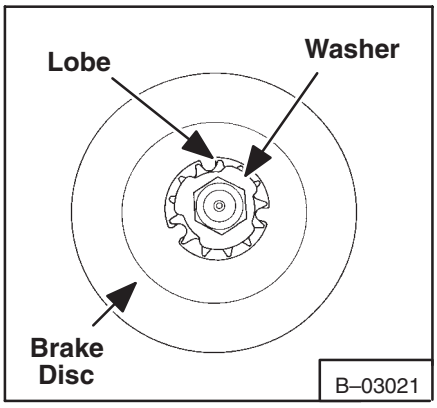

Fig. 4–8 Removing Brake Disc

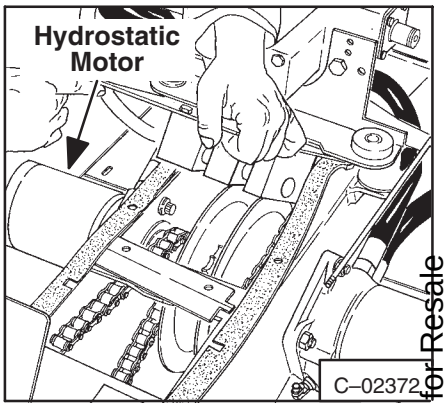

Fig. 4–9 Motor Mounting Bolts

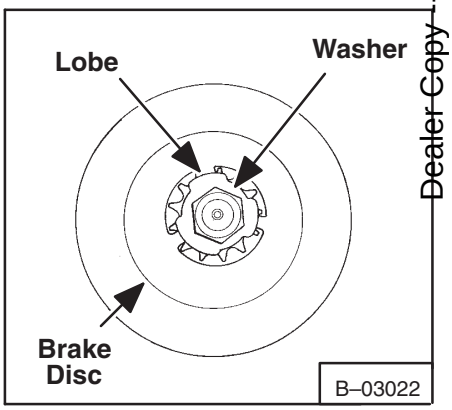

Fig. 4–10 Holding Brake Disc

To install the brake discs:

NOTE: The brake discs must be clean and free of rust and scratches before they are installed.

10. Install the brake disc over the sprocket and turn it until the lobes on the disc are behind the lobes on the retaining washer (Fig. 4–10).

11. If the hydrostatic motor was moved during removal of the brake discs, push it back into position and tighten the mounting bolts to 120 ft.–lbs. (63 Nm) torque.

12. If the drive chain was broken, use the chain link press tool (Special Tool MEL1037) and install a connector link on the chain.

To install new brake/puck assembly (Fig. 4–10):

13. Remove the brake block (Item 1) from the transmission cover (Item 2).

14. Remove the brake pucks (Item 3) and check them for wear and damage. Replace the pucks and wear plates as needed. Check the cam pin for damage.

15. Install the wear plates (Item 4) and pucks into the brake block.

16. Put a new O–ring (Item 5) onto the cam pin and install the cam pin into the brake block.

17. Put a bead of silicone rubber sealant on the side of the brake block that the transmission cover fastens to.

18. Apply LOCTITE to the bolts used to fasten the transmission cover to the brake block.

19. Install the bolts and tighten the bolts 65–70 ft.–lbs. (88–95 Nm) torque.

20. Put the brake assembly and transmission cover over the brake discs (Fig. 4–11).

21. Align the brake discs so they are centered between the brake pucks.

22. Align the holes. Install the bolts and tighten 16–20 ft.–lbs. (22–27 Nm) torque.

23. Install the brake linkage (See Steps 4–11 under Brake Assembly).

NOTE: Remove the spacer from under the hydrostatic pump. Install the bolts into the rubber bushings while holding the pump up to prevent bushings from being pushed out.

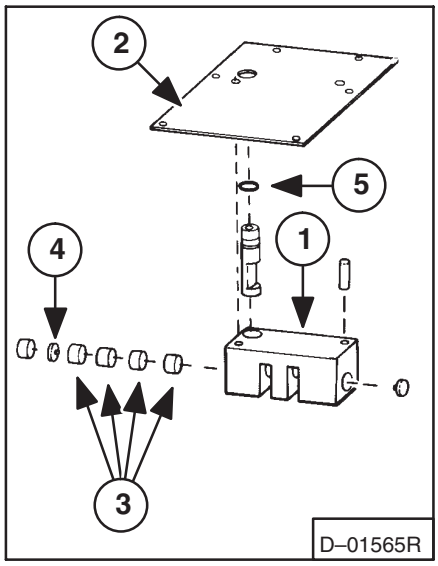

Fig. 4–10 Brake Block

4–2 FINAL DRIVE

The final drive does not have connector links, but if the chain is separated during maintenance use a press link for assembly.

4–2.1 Chain Replacement

The tools listed will be needed to do the following procedure:

MEL1045 Chain Breaker
MEL1037 Chain Link Tool Set

WARNING

Before the cab or the lift arms are raised for service, jackstands must be put under the rear corners of the frame. Failure to use jackstands can allow the machine to tip backward causing injury or death.

W–2014–0895

Put jackstands under the front axles and rear corners of the frame before running the engine for service. Failure to use jackstands can allow the machine to fall or move and cause injury or death.

W–2017–0286

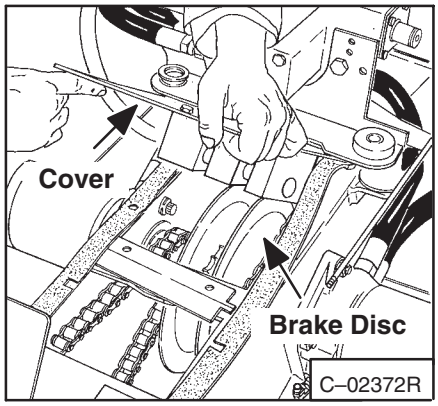

Fig. 4–11 Removing Transmission Cover

1. Raise the operator guard (See Page 5–1).
2. Remove the center transmission shields (Fig. 4–12).
3. Remove the transmission covers.
4. Check the chain for a connector link. If there is no connector link, separation of the chain can be made at any link.
5. Use a chain breaker tool MEL1045 to break the drive chain (Fig. 4–13 & 4–14).
6. Remove the drive chain (Fig. 4–15).
7. Install a new chain over the sprocket.
8. Using a chain link press tool MEL1037 install the connector link.
9. Install the transmission covers on the chaincase.
10. Install the brake linkage (See Paragraph 4–1.1, Page 4–1).
11. Install all other parts removed.
12. Lower the operator guard (See Paragraph 5–1, Page 5–1).

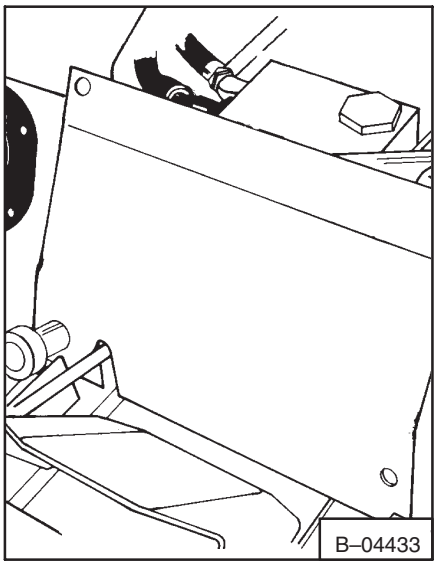

Fig. 4–12 Removing Center Shield

4–3 AXLES AND BEARINGS

Removal, assembly and installation is the same for all four axles.

4–3.1 Axle And Bearing Removal

The tools listed below will be needed to do the following procedure:

MEI1051

NOTE: Chain separation is not necessary for axle removal.

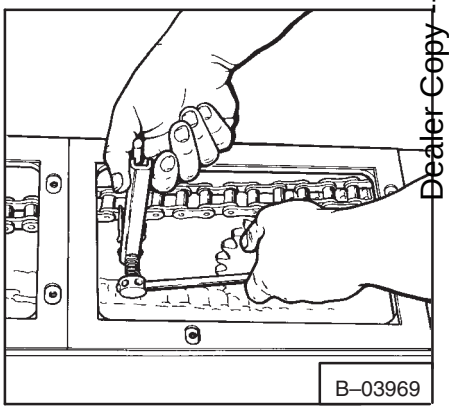

Fig. 4–13 Breaking The Front

WARNING

Put jackstands under the front axles and rear corners of the frame before running the engine for service. Failure to use jackstands can allow the machine to fall or move and cause injury or death.

W–2017–0286

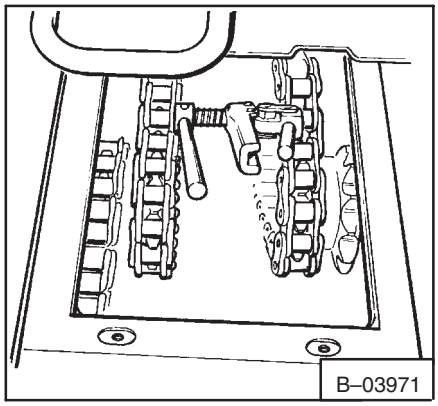

Fig. 4–14 Breaking The Rear Chain

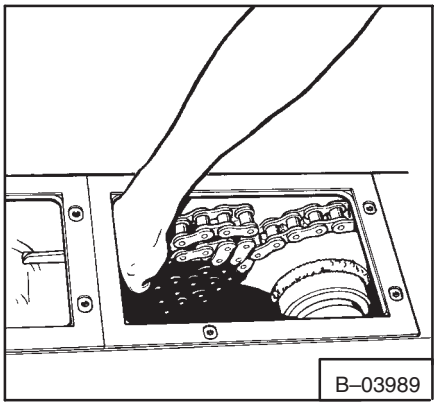

Fig. 4–15 Removing The Drive Chain

1. Raise the operator guard (See Paragraph 5–1, Page 5–1).

2. Remove the steering levers (Fig. 4–16).

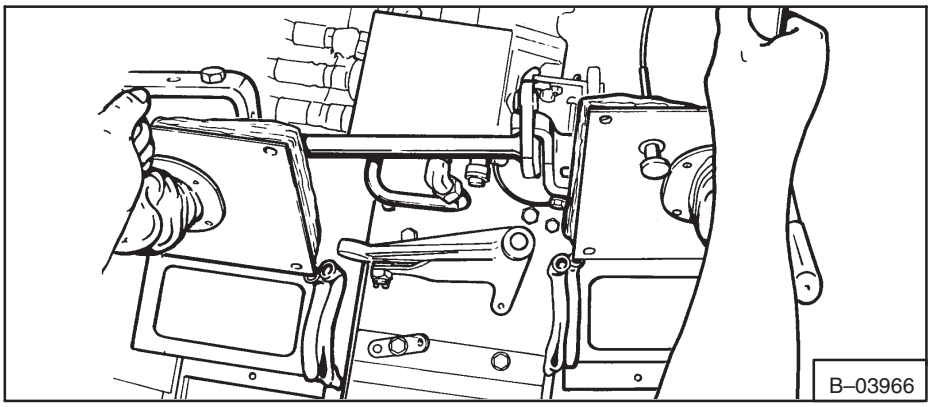

Fig. 4–16 Removing The Steering Levers

3. Remove the transmission covers from the chaincase.

4. Remove the final drive chain (See Paragraph 4–2.1).

5. Remove the bolt and washer from the inside end of the axle (Fig. 4–17).

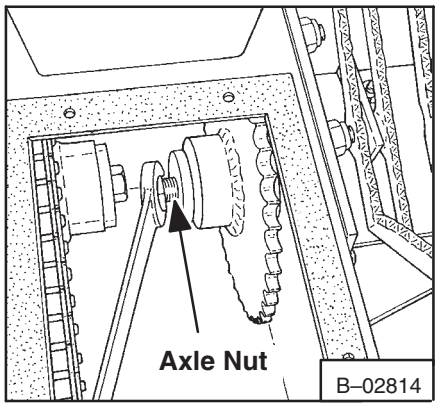

Fig. 4–17 Removing The Axle Bolt

6. Remove the tire and the wheel assembly.

7. Use a slide hammer to remove the axle from the inner bearing (Fig. 4–18).

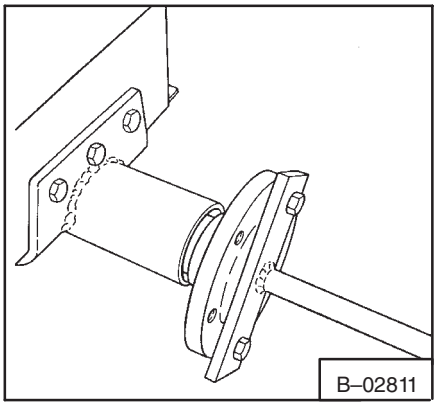

Fig. 4–18 Removing The Axle

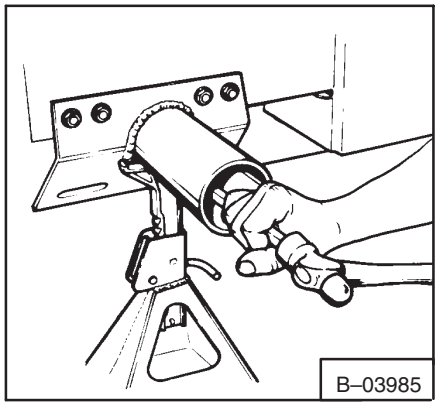

Fig. 4–19 Removing The Bearing Cup

8. Move the sprocket away from the axle tube.

9. Remove the inside bearing cup using a long punch (Fig. 4–19).

10. Use a bearing puller tool and a slide hammer (Fig. 4–20) to remove the outer bearing cup.

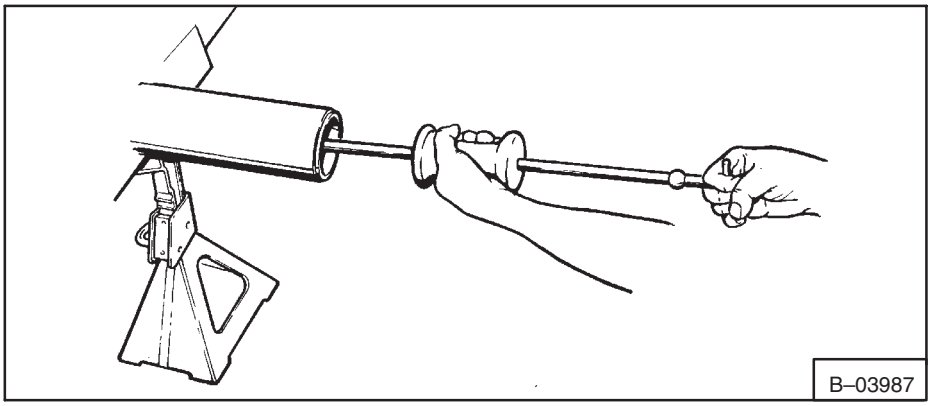

Fig. 4–20 Removing The Bearing Cup

11. Use a puller to remove the outer bearing cone (Fig. 4–21).

12. Clean and check all the parts for wear and damage.

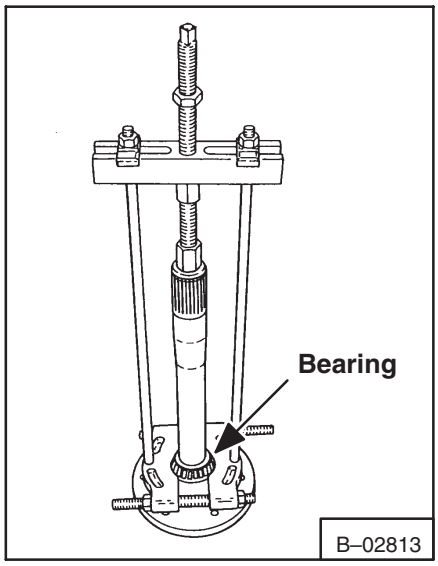

Fig. 4–21 Removing The Outer Bearing

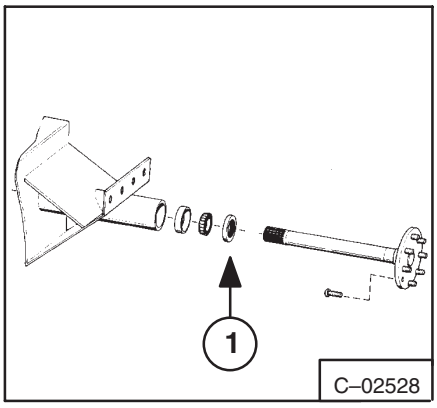

Fig. 4–22 Axle Wear Sleeve

4–3.2 Assembly Of The Axles

1. Lubricate the new axle seal (Fig. 4–22, Item 1) and install the seal over the axle flange.

NOTE: The spring loaded side of the seat must be up.

2. Pack bearings with grease.

3. Install the bearing cone on the axle and drive the bearing over the first raised surface of the axle using a pipe (Figure 4–23). DO NOT damage the bearing.

4. Drive the bearing onto the axle over the second raised surface using the pipe (Fig. 4–24).

5. Install the outer axle bearing cup using an arbor of the correct size (Fig. 4–25). The inner bearing cup can be pulled into position using a long bolt and a washer.

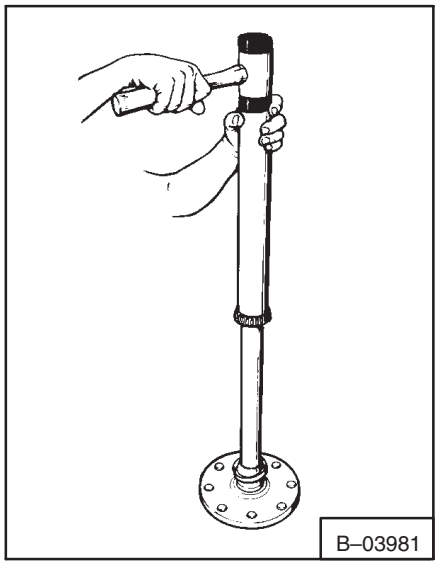

Fig. 4–23 Installing Bearing

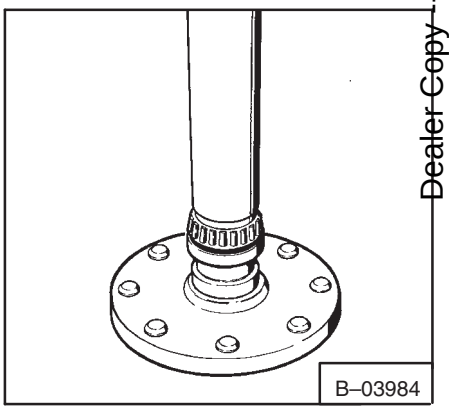

Fig. 4–24 Installing Bearing

4–3.3 Installing The Axles

The tool listed will be needed to do the following procedure:

MEL1051 Seal Installation Tool

1. Put the sprocket into the chaincase with the chain in position.

NOTE: The wide part of the sprocket hub goes toward the inside for the front axles and toward the outside on the rear axles.

2. Install the axle assembly into the axle housing.

3. Install the inner halves of the installation tool MEL1051, used to install the axle (Fig. 4–16).

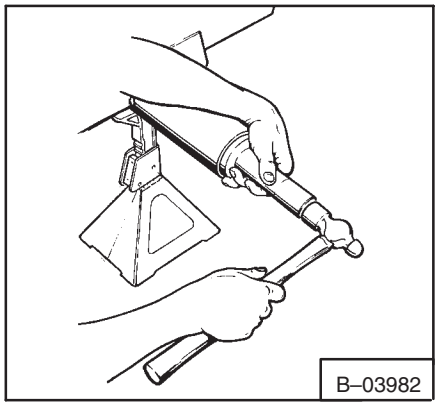

Fig. 4–25 Installing Bearing Cup

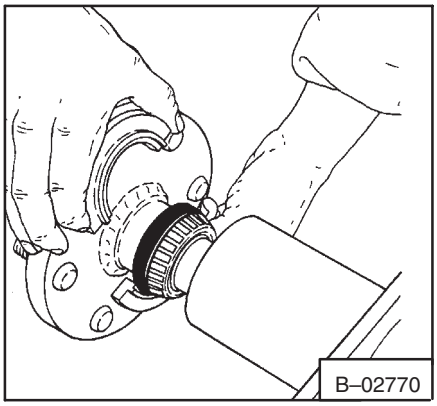

Fig. 4–26 Axle Installation Tool

4. Install the outer halves of the installation tool (Fig. 4–27).

5. Install the spring on the axle installation tool (Fig. 4–28).

6. Tighten the nut until the installation tool is in contact with both the axle flange and the axle housing.

7. Remove the axle installation tool.

8. With the chain on the sprocket install them onto the axle.

9. Install the bolt and washer on the inside of the sprocket.

10. Check the axle end play. End play must not exceed 0.010 inch (0,254 mm). Different sized washer (0.005 – 0.010 inch [0,127 – 0,254 mm]) are available to get correct end play (See Parts Microfiche for the correct washers.

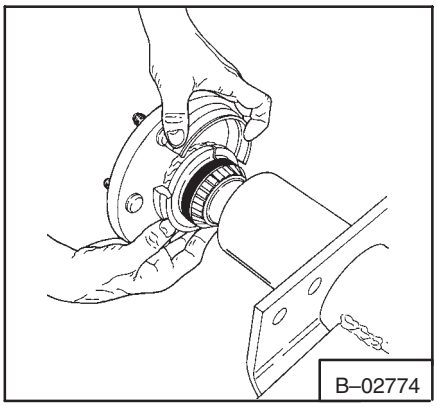

Fig. 4–27 Axle Installation Tool

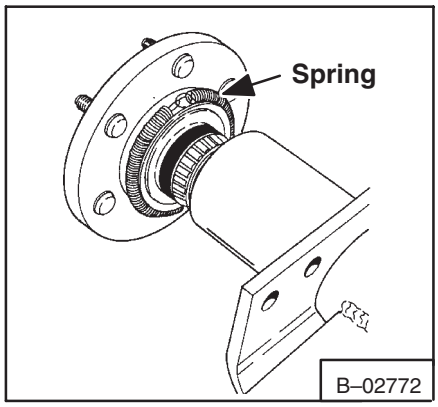

Fig. 4–28 Installing Spring On Tool

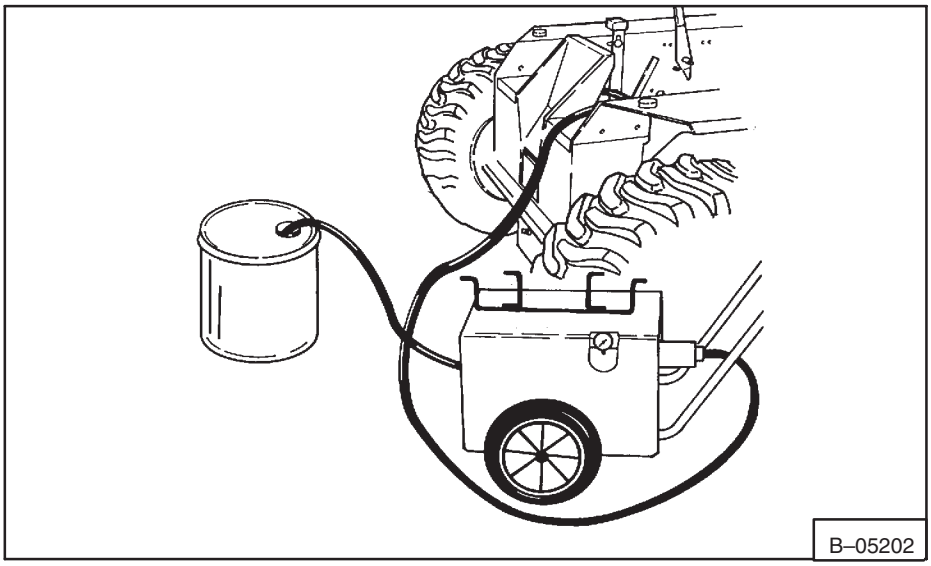

Fig. 4–29 Removing Chaincase Fluid

4–4 CHAINCASE FLUID

4–4.1 Replacing The Chaincase Fluid

1. Raise the operator cab (See Paragraph 5–1, Page 5–1).

2. Remove the front transmission cover.

3. Use a pump (Fig. 4–29) to remove all the fluid from the chaincase.

4. Use clean rags to remove any fluid that the pump did not remove and to clean the chaincase (Fig. 4–30).

5. Use recommended replacement fluid to fill the chaincase (See Section 8 for specifications).

6. Install the front transmission cover.

7. Lower the operator cab (See Paragraph 5–1, Page 5–1).

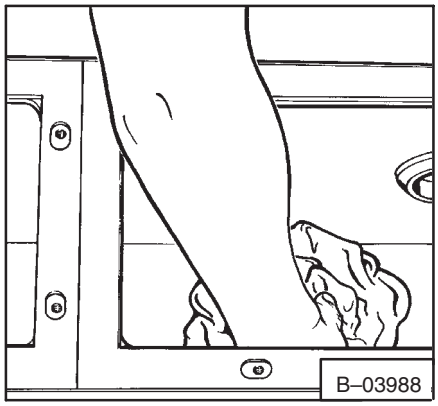

Fig. 4–30 Cleaning Chaincase

MAIN FRAME

WARNING

Instructions are necessary before operating or servicing machine. Read Operation & Maintenance Manual, and signs (decals) on machine. Follow warnings and instructions in the manuals when making repairs, adjustments or servicing. Check for correct function after adjustments. repairs or service. Failure to follow instructions can cause injury or death.

W–2144–0189

bobcat®

5 MAIN FRAME

5–1 RAISING AND LOWERING THE OPERATOR GUARD

5–1.1 Raising The Operator Guard

1. Stop the Bobcat loader on a level surface.

2. Put the lift arms all the way down or hold the lift arms up with a LIFT ARM STOP. The LIFT ARM STOP must be installed by a second person while the operator is in the operator's seat.

3. Stop the engine, engage the brake and disconnect the wiring harness behind the seat (Fig. 5–1).

4. Put jackstands or blocks under the rear corners of the Bobcat loader to keep the loader from tipping backwards.

5. Remove the two bolt assemblies (including washers) at the front corners of the operator guard (Fig. 5–2).

6. Two persons are needed to lift the operator guard. Avoid slippery surfaces when lifting the operator guard.

7. Stand on the ground, one person on each side and lift the operator guard using the grab handles and the bottom of the operator guard (Fig. 5–3).

8. Lift slowly until the operator guard is all the way up. The operator guard will lock in this position.

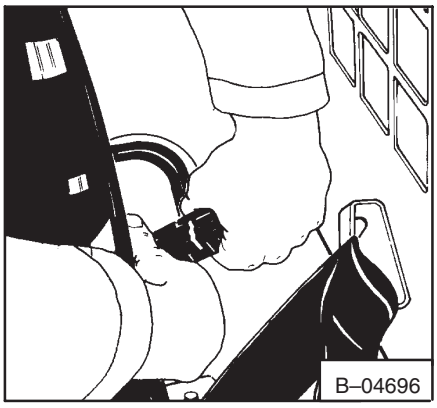

Fig. 5–1 Wire Harness Connectors

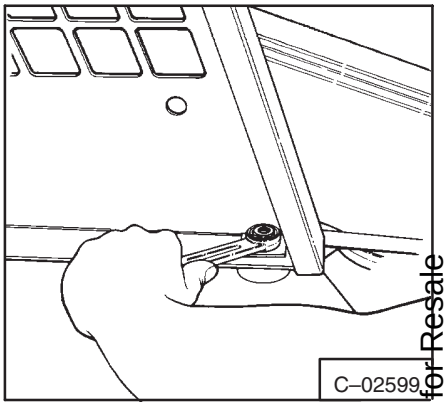

Fig. 5–2 Operator Guard Bolts

5–1.2 Lowering The Operator Guard

1. Stop the engine.

2. Two persons are needed to lower the operator guard. Avoid slippery surfaces when lowering the operator guard.

3. Stand on the ground, one person on each side and pull down on the operator guard until it contacts the lock mechanism.

⚠ WARNING

To release cab lock when the lift arms are up, reach under the lift cylinder and pull the ring on the cable. Failure to release lock correctly can cause serious injury.

W–2008–1285

4. Pull the ring on the cable while the second person lifts the operator guard a small amount until the lock mechanism is released.

5. Both persons must slowly lower the operator guard by holding the bottom of the operator guard and the grab handles (Fig. 5–3).

6. Install the two nuts and washers (Fig. 5–2). Tighten the nuts 40–50 ft.–lbs. (54–69 Nm) torque.

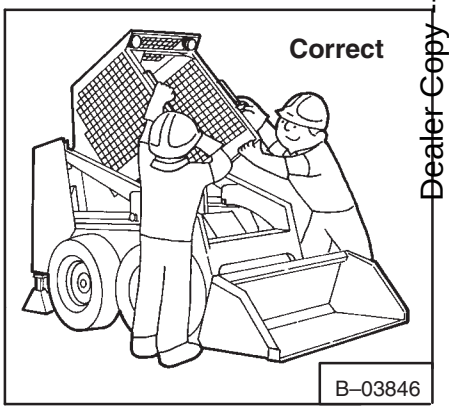

Fig. 5–3 Raising Operator Guard (Correct)

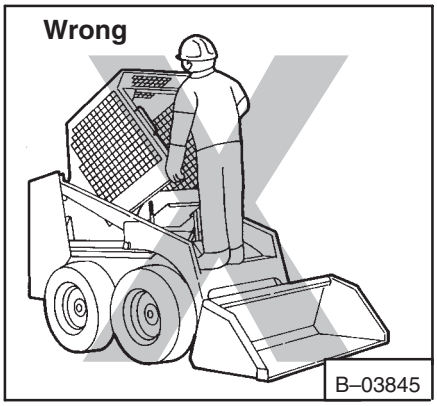

Fig. 5–4 Raising Operator Guard (Wrong)

7. Connect the wiring harness behind the seat (Fig. 5–1).

8. Remove the LIFT ARM STOP while the second person is in the operator's seat.

5–1.3 Jumper Start Switch

The tool listed will be needed to do the following procedure:

MEL1138 – Jumper Start Switch

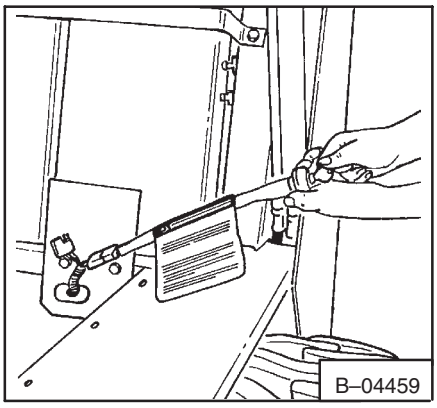

Fig. 5–5 Jumper Start Switch

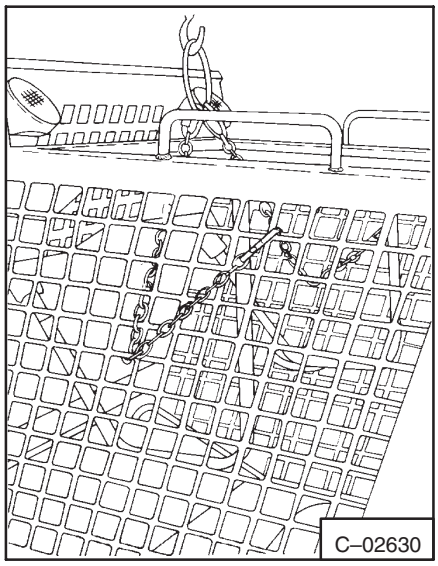

Fig. 5–6 Removing Operator Guard

The short wire harness assembly is required when the operator guard is in the raised position for service and the serviceman needs to start the engine. The wire harness connectors separate when the operator guard is tilted back. Install the short wire harness (Fig. 5–5) into the engine wire harness of the loader. This jumper start switch is required when the serviceman is adjusting the steering linkage, checking the charge pressure and making hydraulic/hydrostatic pump tests.

5–2 OPERATOR GUARD REMOVAL AND INSTALLATION

5–2.1 Removing The Operator Guard

WARNING

Put jackstands under the front axles and rear corners of the frame before running the engine for service. Failure to use jackstands can allow the machine to fall or move and cause injury or death.

W–2017–0286

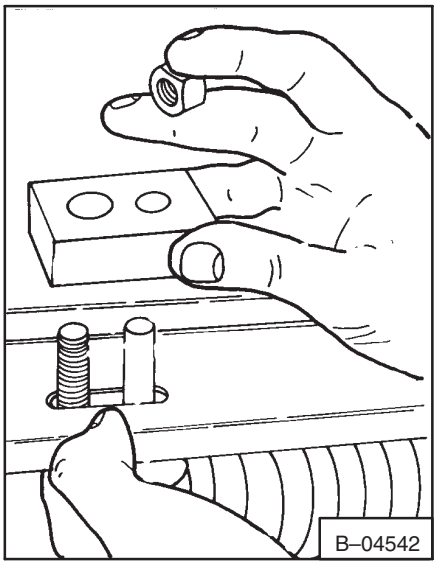

Fig. 5–7 Removing Bolts And Blocks

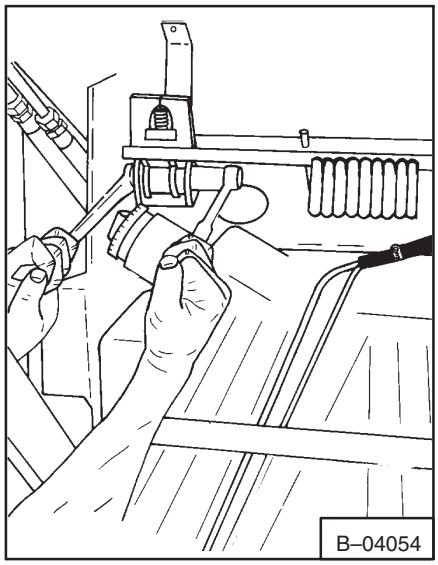

Fig. 5–8 Removing Nuts

NOTE: If this procedure is done with the lift arms up see Paragraph 1–16, Page 1–20.

1. Stop the engine and activate the hydraulic controls to release hydraulic pressure in the system.

2. Lift the operator guard (See Paragraph 5–1 *RAISING THE OPERATOR GUARD).*

3. Fasten a chain hoist to the operator guard (Fig. 5–6).

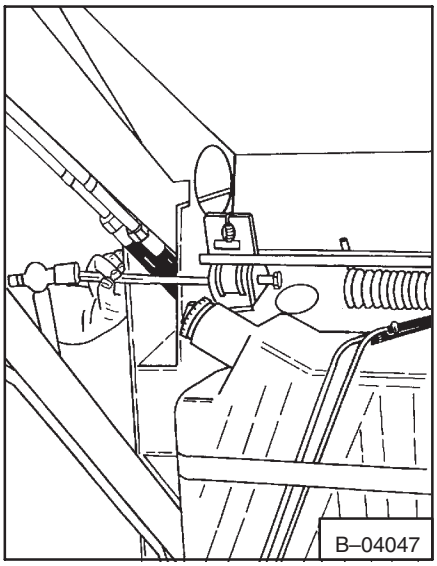

Fig. 5–9 Removing Bolts

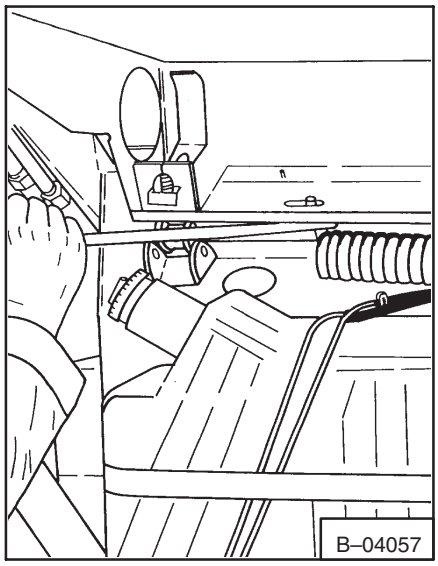

Fig. 5–10 Removing Springs

4. Remove the bolts and blocks holding the spring in position (Fig. 5–7).

5. With the chain of the chain hoist tight remove the nuts from the bolts (Fig. 5–8).

6. Remove the bolts using a punch (Fig. 5–9).

7. Pry the springs out of the holes (Fig. 5–10).

8. Remove the operator guard using the chain hoist.

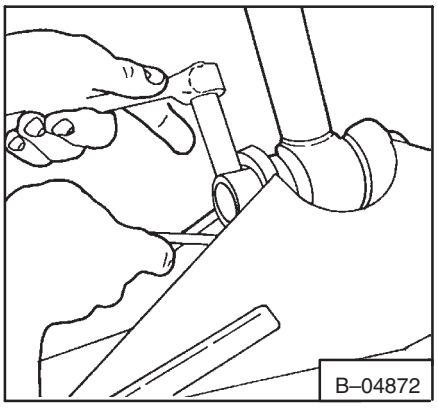

Fig. 5–11 Removing The Lockbolt

5–2.2 Operator Guard Installation

1. Position the operator guard over the loader aligning the holes in the operator guard with the ends of the spring (Fig. 5–10).

2. Lower the operator guard until the pivot bracket holes are in alignment with the mounting bracket holes.

3. Install the pivot bolts in the pivot brackets.

4. Install the nuts and tighten to 25–35 ft.–lbs. (34–37 Nm) torque (Fig. 5–8).

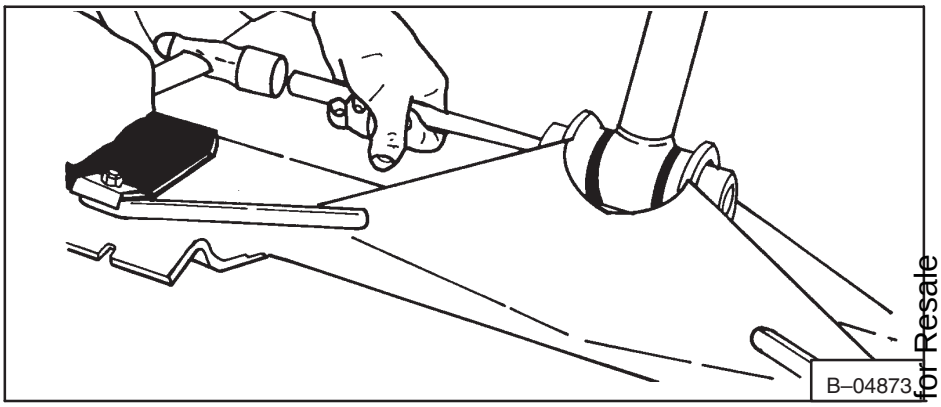

Fig. 5–12 Removing The Pivot Pin

5. Install the spring blocks. Install the bolts in the spring blocks and tighten to 65–70 ft.–lbs (88–95 Nm) torque (Fig. 5–7).

6. Remove the chain hoist from the operator guard.

7. Lower the operator guard (See Paragraph 5–1, Page 5–1).

8. Remove the jackstands.

5–3 BOB–TACH FRAME (40 Series)

5–3.1 Removing The Bob–Tach

1. Start the engine. Tilt the Bob–Tach forward until the front edge of the Bob–Tach is on the floor.

2. Stop the engine. Activate the hydraulic controls to release the hydraulic pressure from the system.

3. Remove the locknut and the lock bolt from the rod end of the tilt cylinder (Fig. 5–11).

4. Remove the pivot pin (Fig. 5–12) from the tilt cylinder rod end using a hammer and a punch.

5. Remove the grease fitting at the pivot pin (Fig. 5–13).

NOTE: The grease fitting at the pivot pin must be removed before removing the pivot pin.

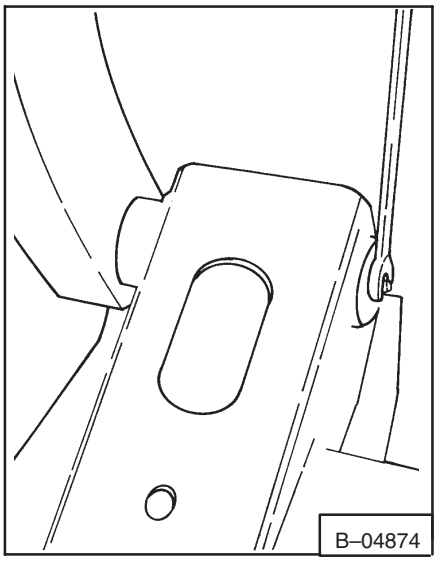

Fig. 5–13 Removing Grease Fitting

6. Loosen the pivot pin bolt. Do not remove the bolt at this time (Fig. 5–14).

7. Hit the bolt with a hammer (Fig. 5–15) to start the pivot pin into the Bob–Tach.

8. Remove the bolt and use a punch and push the pivot pin into the Bob–Tach. DO NOT damage the threads.

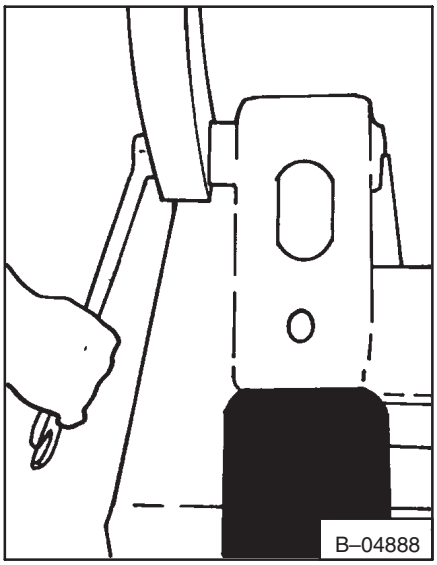

Fig. 5–14 Loosening Pivot Bolt

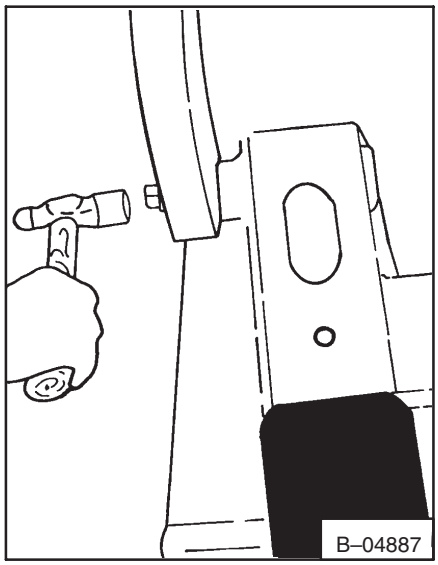

Fig. 5–15 Removing The Pin

9. Use the same procedure to remove the other pin.

10. Remove the Bob–Tach from the lift arms.

5–3.2 Disassembly Of The Bob–Tach

1. Put the Bob–Tach on a work bench.

2. Remove the Bob–Tach pivot pin (Fig. 5–16).

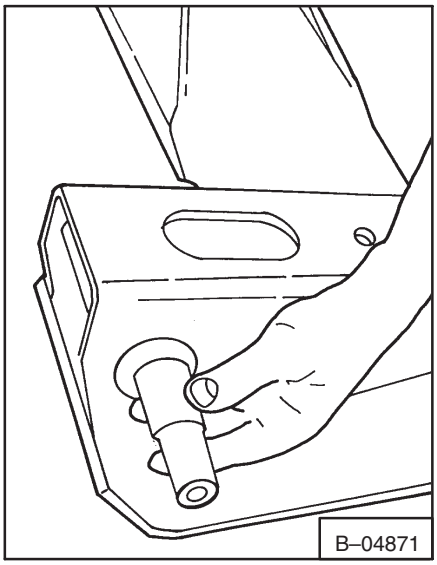

Fig. 5–16 Removing The Pin

3. Remove the bolt at the Bob–Tach lever (Fig. 5–17).

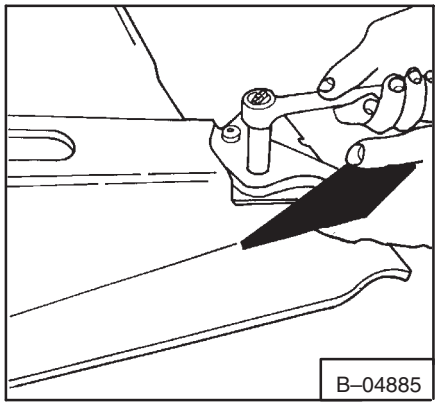

Fig. 5–17 Removing Spring

4. Remove the screw on the Bob–Tach lever (Fig. 5–18) and remove the lever.

5. Remove the spring (Fig. 5–19) from the Bob–Tach and check it for damage.

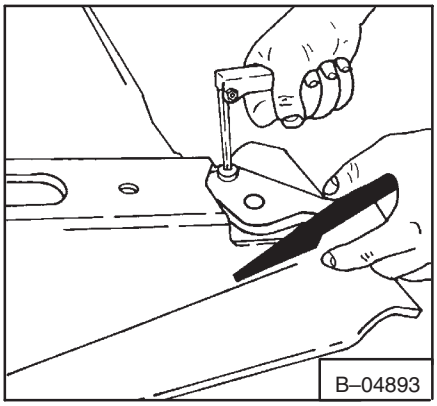

Fig. 5–18 Removing Screw

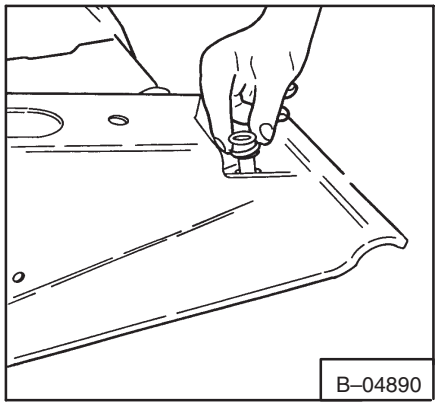

Fig. 5–19 Removing Spring

6. Use a punch and hammer (Fig. 5–20) to remove the wedge from the Bob–Tach.

7. Remove the wedge from the Bob–Tach (Fig. 5–21).

8. Remove the block from the wedge bolt (Fig. 5–22).

9. Remove the nut (Fig. 5–23) and remove the spring from the bolt.

10. Remove the Teflon guides from the Bob–Tach frame (Fig. 5–24).

11. Clean and check all the parts for wear and damage. Replace the parts as needed.

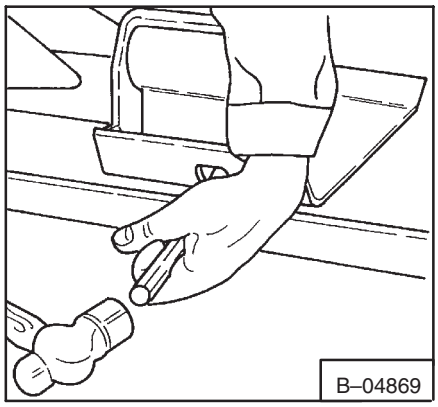

Fig. 5–20 Removing Wedge

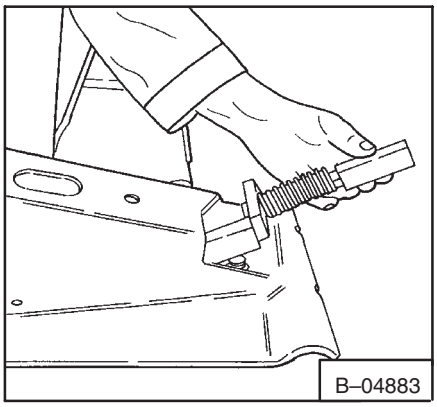

Fig. 5–21 Removing Wedge

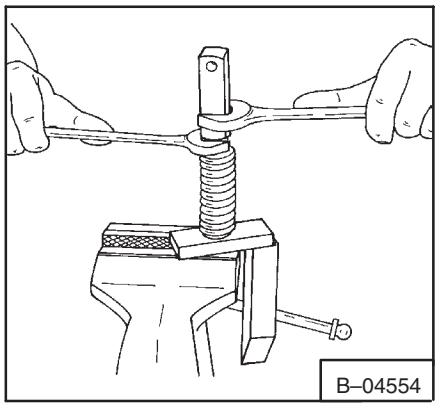

Fig. 5–22 Removing Block

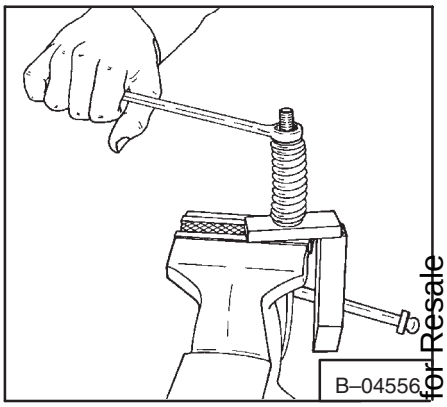

Fig. 5–23 Removing The Spring

5–3.3 Assembly Of The Bob–Tach

1. Install the spring on the wedge and install the nut (Fig. 5–25).

2. Install the block on the wedge bolt. Turn the block down until there is 6.090–6.210 inches (155–158 mm) from the center of the lever bolt hole to the top of the wedge where the spring seats (Fig. 5–26).

3. Tighten the nut to 65–70 ft.–lbs. (88–95 Nm) torque to lock the block into position.

4. Install the new Teflon guides in the Bob–Tach (Fig. 5–27).

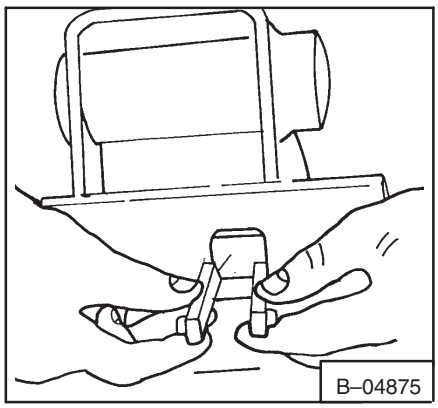

Fig. 5–24 Removing Guides

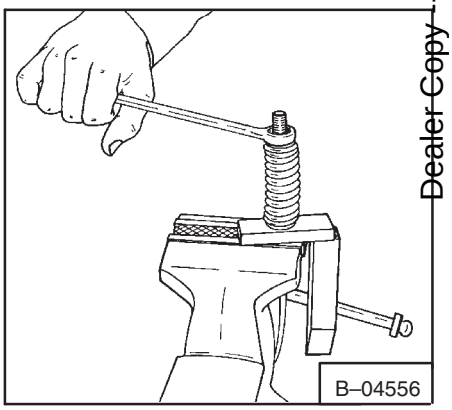

Fig. 5–25 Installing The Spring

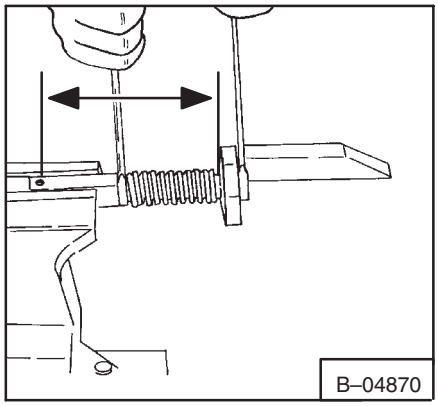

Fig. 5–26 Adjusting Spring

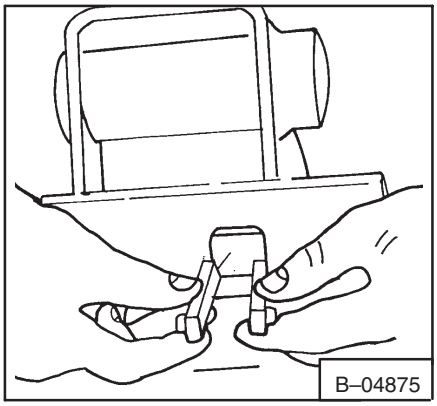

Fig. 5–27 Installing Guides

5. Install the wedge assembly into the Bob–Tach (Fig. 5–28).

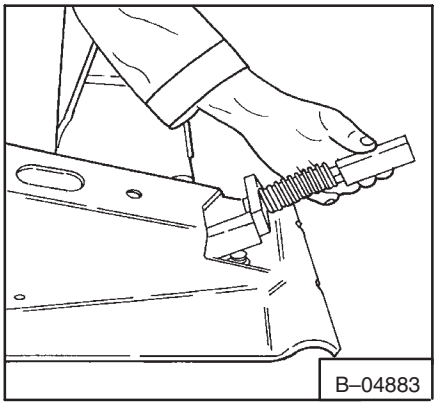

Fig. 5–28 Installing Wedge Assembly

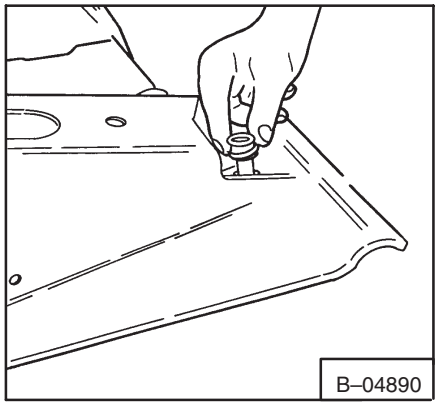

Fig. 5–29 Installing Spring

6. Install the spring (Fig. 5–29) on the Bob–Tach.

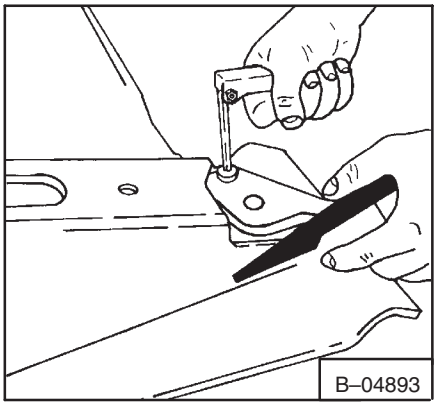

Fig. 5–30 Installing Screw

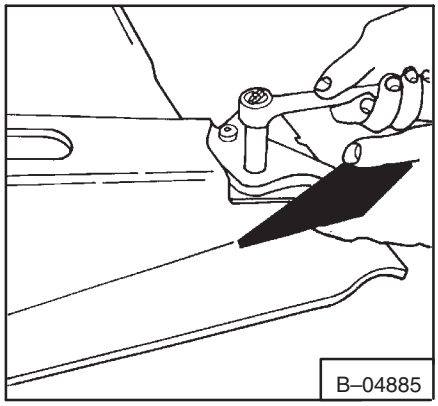

Fig. 5–31 Installing Bolt

7. Install the screw into the Bob–Tach lever (Fig. 5–30).

8. Install the bolt into the Bob–Tach lever (Fig. 5–31).

9. Install the Bob–Tach pivot pin (Fig. 5–32).

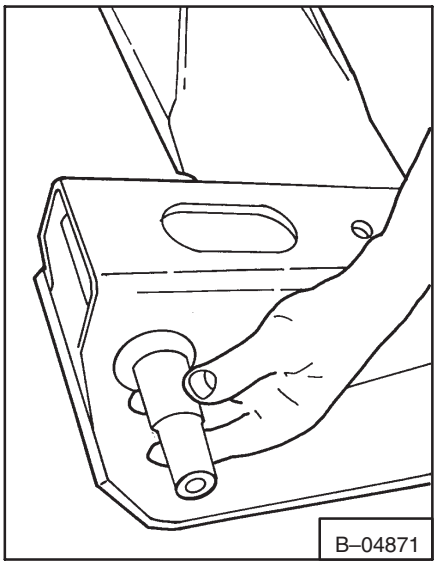

Fig. 5–32 Installing Pivot Pin

5–3.4 Installing The Bob–Tach

1. Position the Bob–Tach between the lift arms.

2. Using a punch push the pivot pin into the lift arms (Fig. 5–33) using the grease fitting hole.

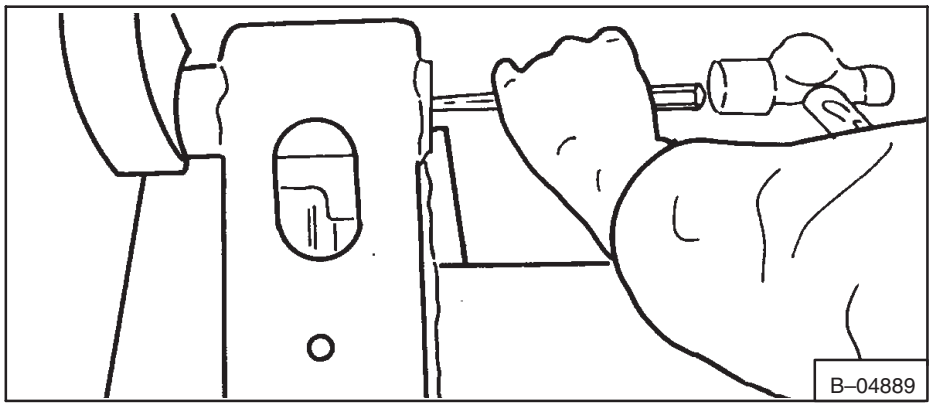

Fig. 5–33 Putting Pin Into Position

3. Install the bolt into the pivot pin and tighten to 125–140 ft.–lbs. (170–190 Nm) torque.

4. Install the grease fitting and tighten.

5. Put the floor jack under the Bob–Tach.

6. Install new seals at the rod end of the tilt cylinder shaft (Fig. 5–34).

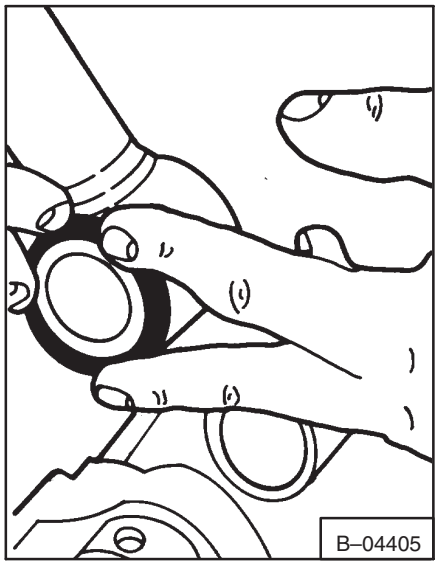

Fig. 5–34 Installing Seals

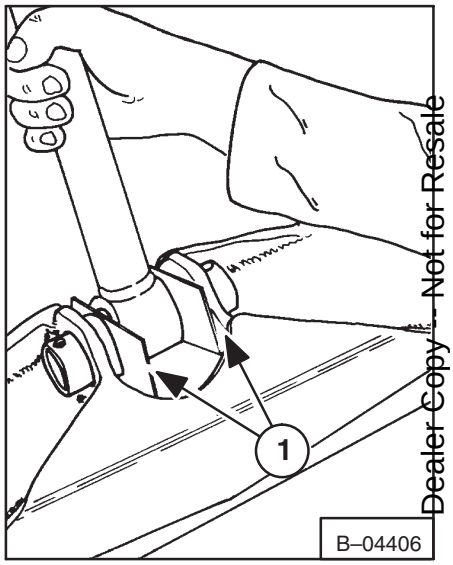

Fig. 5–35 Installing Rod End

7. Lift the Bob–Tach with the floor jack.

8. Put a piece of shim stock (Fig. 5–35, Item 1) on each side of the seals at the rod end of the cylinder. Install the rod end of the tilt cylinder in the Bob–Tach frame.

9. Install the rod end pin (Fig. 5–36).

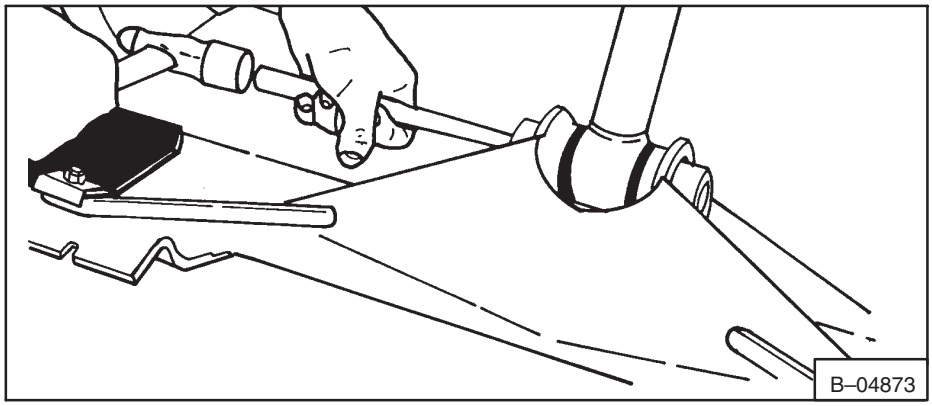

Fig. 5–36 Installing Pin

10. Install the bolt and locknut and tighten (Fig. 5–37).

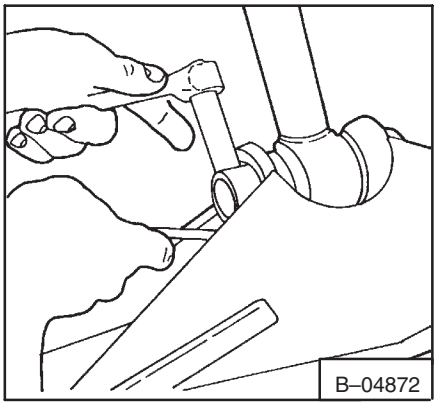

Fig. 5–37 Installing Bolt And Locknut

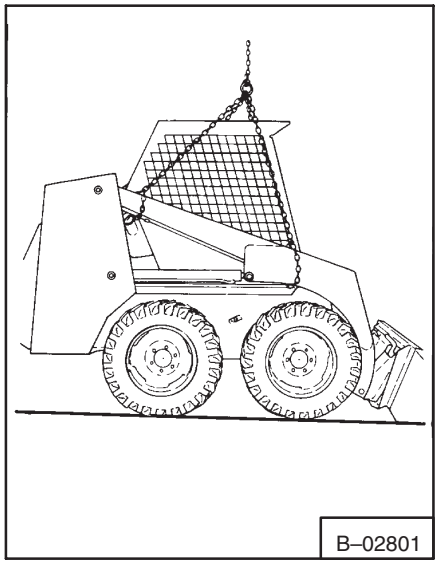

Fig. 5–38 Installing Chain Hoist

5–4 LIFT ARMS

5–4.1 Removing The Lift Arms

WARNING

Put jackstands under the front axles and rear corners of the frame before running the engine for service. Failure to use jackstands can allow the machine to fall or move and cause injury or death.

W–2017–0286

1. Stop the engine. Activate the hydraulic controls to release all the hydraulic pressure.

2. Remove the Bob–Tach from the lift arms (See Paragraph 5–3.1).

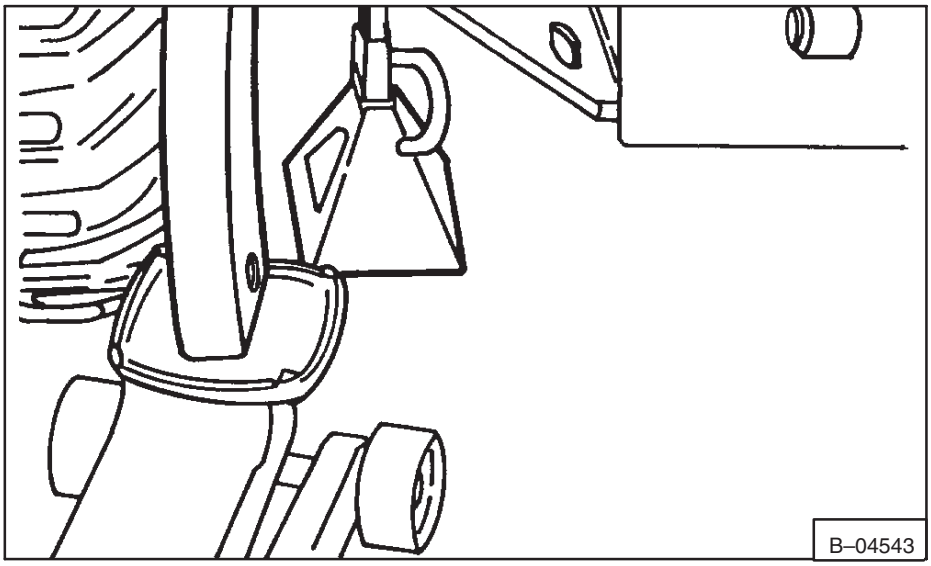

Fig. 5–39 Lifting Lift Arms With Floor Jack

3. Fasten chains and a chain hoist to the lift arms as shown in figure 5–38.

4. Put a floor jack under the lift arms (Fig. 5–39).

5. Raise the lift arms, with the floor jack, until the pivot pins in the rod end of the lift cylinder can be removed.

6. Remove the locknut and bolt from the rod end pivot pin (Fig. 5–40) (both sides).

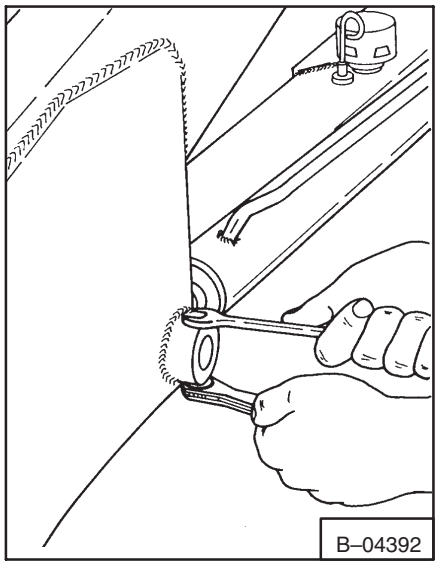

Fig. 5–40 Locknut And Bolt

7. Remove the pivot pins (Fig. 5–41). Be careful when removing the pivot pins at the lift cylinder. Put a support under the cylinder to keep it from falling when the pins are removed.

8. Lower the lift arms and remove the floor jack.

9. Remove the locknut and bolt (Fig. 5–42) (both sides) from the lift arm pivot pin.

10. Tighten the chain hoist, remove the pivot pins (Fig. 5–43) from the lift arms.

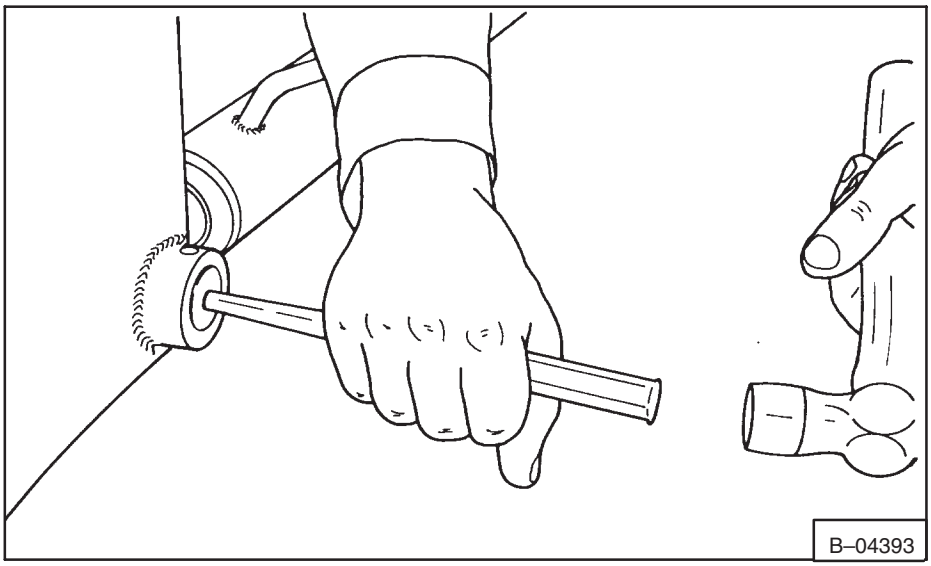

Fig. 5–41 Removing Rod End Pin

11. Raise the lift arms, with the chain hoist, and remove from the loader.

5–4.2 Installing The Lift Arms

1. With a chain hoist, position the lift arms on the loader and make alignment of the pivot pin holes in the lift arms and the main frame.

2. Install the lift arm pivot pins in the main frame and the lift arms.

3. Install the bolt and the locknut and tighten to 18–20 ft.–lbs. (24–47 Nm) torque (Fig. 5–42).

4. Remove the chain hoist and chains from the lift arms.

5. Install the rod end of the lift cylinder in the lift arms.

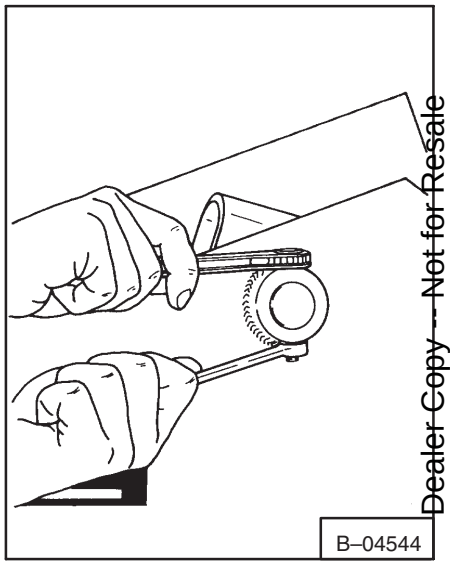

Fig. 5–42 Locknut And Bolt

6. Install the pivot pin in the lift cylinder.

7. Install the bolt and locknut in the pivot and tighten to 18–20 ft.–lbs. (24–27 Nm) torque (Fig. 5–40).

8. Install the Bob–T ach on the lift arms (See Paragraph 5–34).

9. Remove the jackstands from under the loader frame.

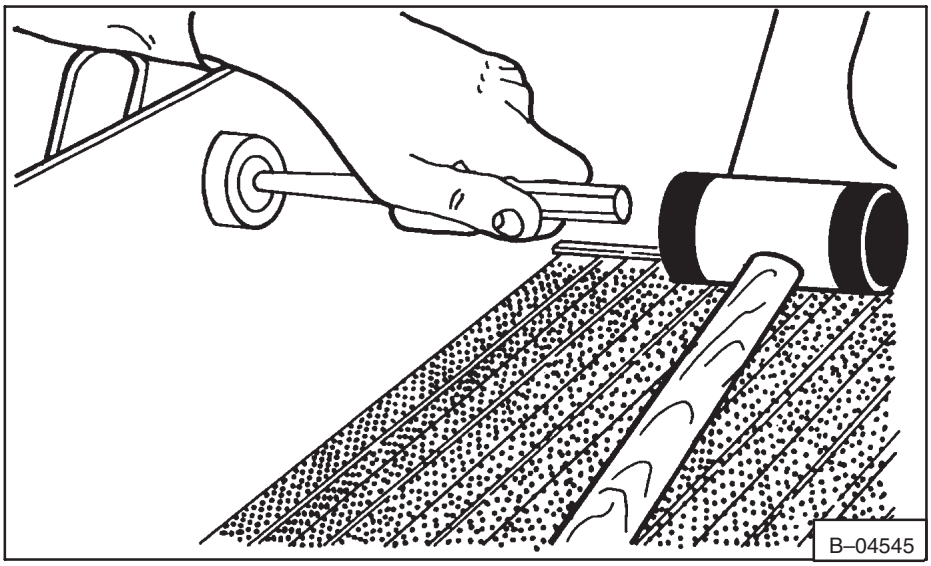

Fig. 5–43 Removing Lift Arm Pivot Pins

5–5 REAR DOOR

5–5.1 Removing The Rear Door

1. Open the rear door latch.
2. Install a chain hoist on the rear door (Fig. 5–44).
3. Remove the hinge pins (Fig. 5–45).
4. Remove the rear door.

5–5.2 Installing The Rear Door

1. Install the rear door on the loader.
2. Make alignment of the hinges and hinge brackets and install the hinge pins.
3. Remove the chain hoist.

5–5.3 Adjusting The Rear Door Latch

1. Loosen the set screw at the latch bolt.
2. Loosen the nut on the end of the latch pin (Fig. 5–46).
3. Turn the latch bolt (Fig. 5–47) in or out to get the correct adjustment.
4. Close the rear door.
5. The rear door must contact the main frame at the bottom and top with the lever in the position shown in figure 5–48).
6. It will take about 50 lbs. of pressure to push the lever down into the locked position if the rear door is adjusted correctly. When the latch is adjusted correctly, tighten the set screw. The set screw must be aligned with the flat surface of the bolt.

⚠ WARNING

Keep the rear door closed when operating the machine. Failure to do so could seriously injure a bystander.

W–2020–1285

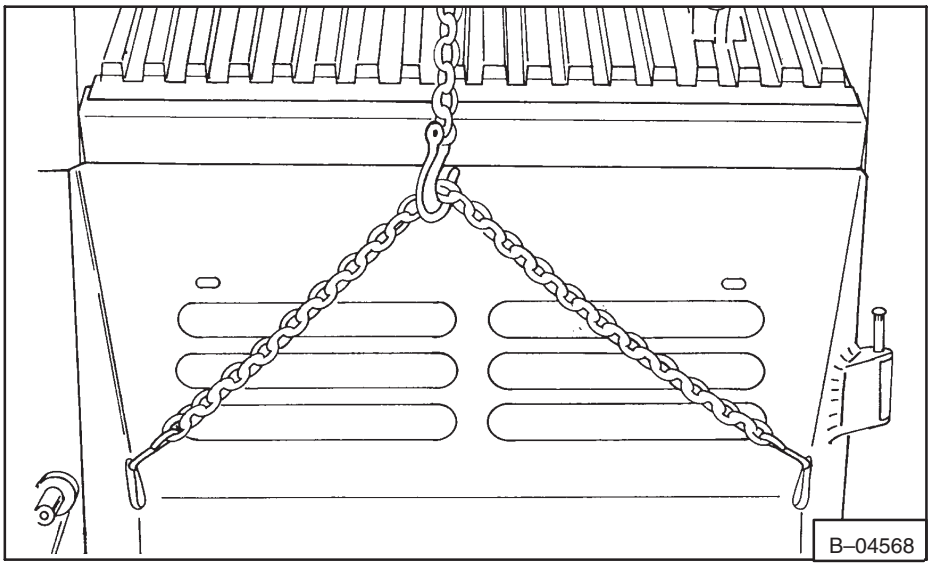

Fig. 5–44 Installing Chain Hoist

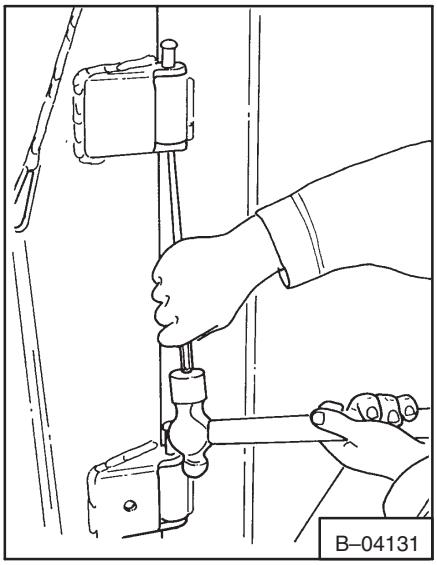

Fig. 5–45 Hinge Pins

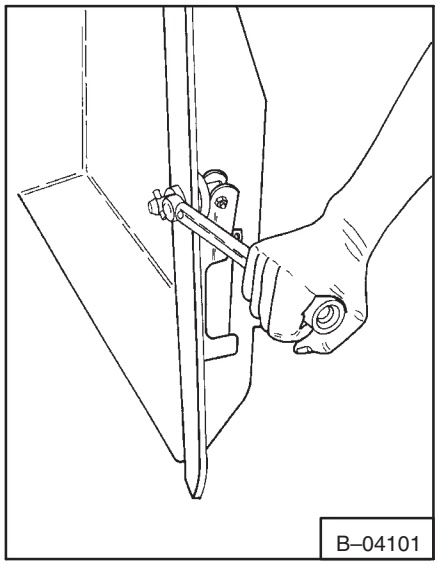

Fig. 5–46 Door Latch Nut

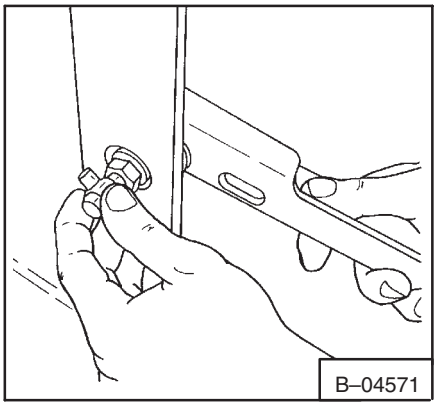

Fig. 5–47 Latch Bolt

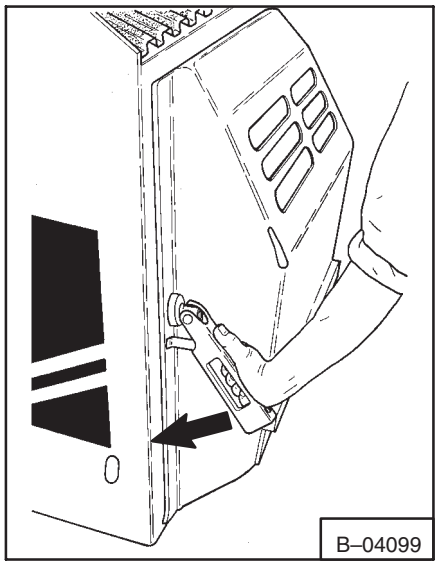

Fig. 5–48 Closing Rear Door

5–6 FUEL TANK

5–6.1 Removing The Fuel Tank

1. Raise the lift arms and install the lift arm stop (See Paragraph 1–16, Page 1–20).

2. Raise the operator 's guard (See Paragraph 5–1.1, Page 5–1).

3. Disconnect the wire from the connector in the operator guard (Fig. 5–49).

4. Put the wire in the tank area (Fig. 5–50).

5. Remove the fuel line (Fig. 5–51).

6. Remove the nut holding the strap on (Fig. 5–52).

7. Remove the fuel tank (Fig. 5–53).

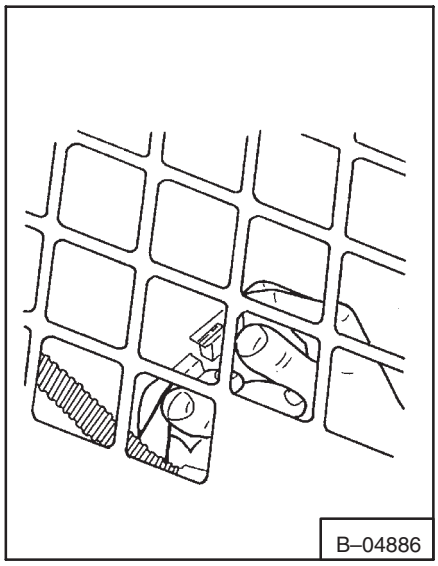

Fig. 5–49 Disconnecting Sender Wire

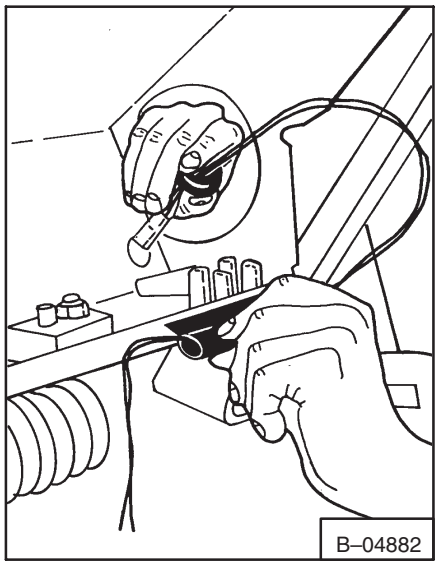

Fig. 5–50 Moving Sender Wire

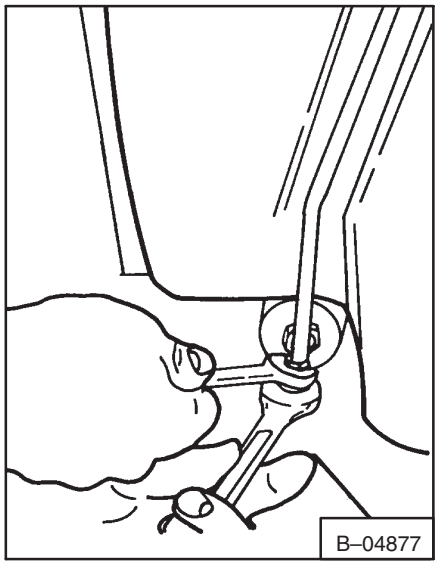

Fig. 5–51 Disconnecting Fuel Line

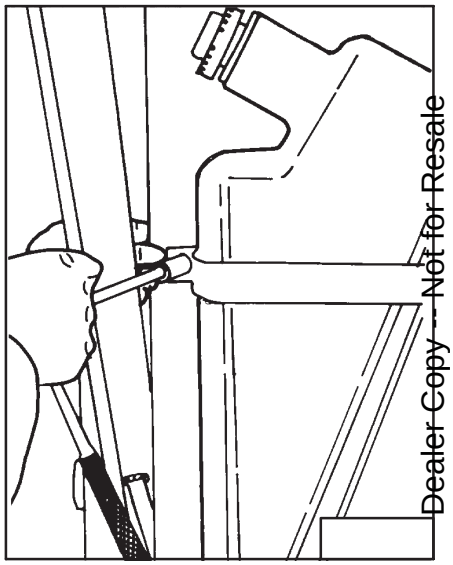

Fig. 5–52 Removing Nut

5–6.2 Installing The Fuel Tank

1. Put the fuel tank in its correct location.

2. Connect the strap to the bolt and tighten the nut (Fig. 5–52).

3. Connect the sender wire.

4. Lower the operator guard (See Paragraph 5–1.2, Page 5–1).

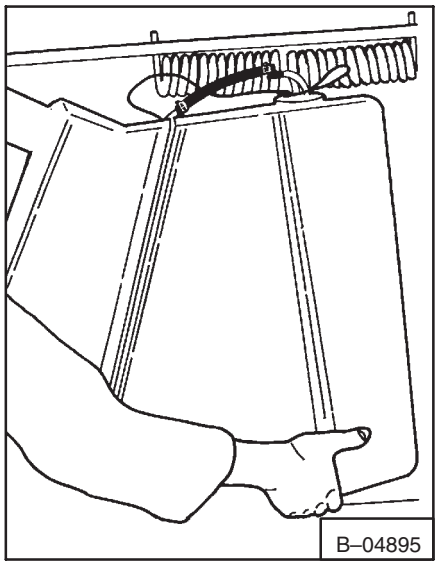

Fig. 5–53 Removing Fuel Tank

BOB–TACH (50 Series)

Removal And Installation

Tilt the Bob–Tach fully forward until the front edge is on the floor **[A]**.

Stop the engine. Move the hydraulic controls to release the hydraulic pressure.

Remove the retainer bolt from the pivot pin **[B]**.

Installation: Tighten the retainer bolt to 18–20 ft.lbs. (24–27 Nm) torque.

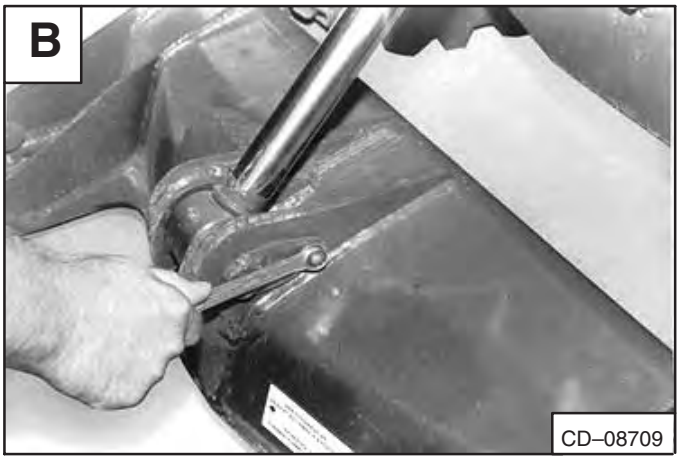

Remove the grease fitting from the pivot pin **[C]**.

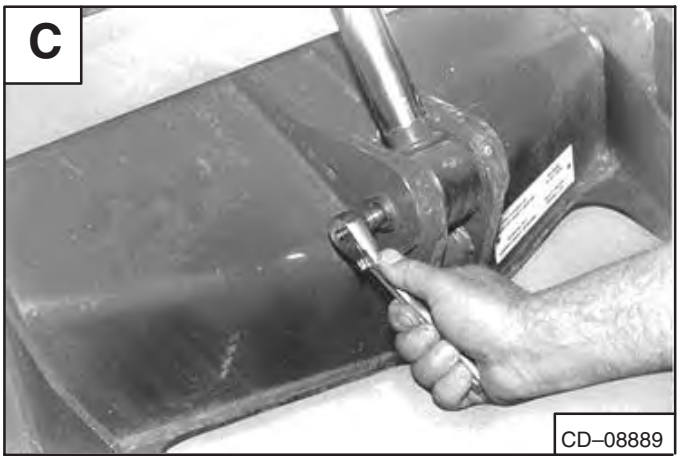

Use a punch and hammer, remove the rod end pivot pin **[D]**.

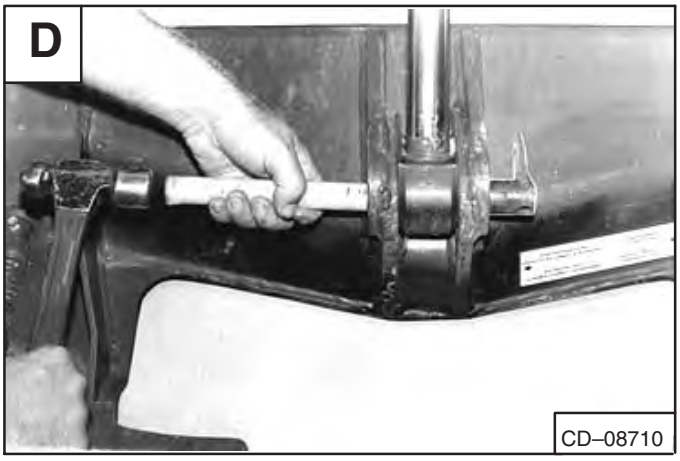

BOB–TACH (50 Series) (Cont'd)

Removal And Installation (Cont'd)

Remove the hydraulic cylinder rod end. Remove the seals **[A]**.

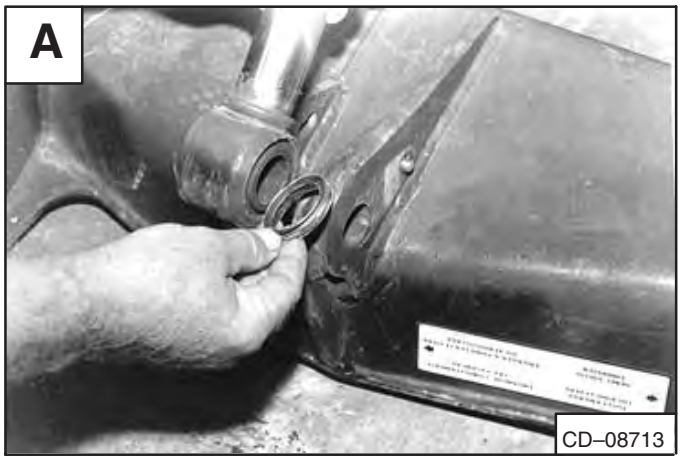

Installation: Put a piece of shim stock on each side over the seals. Install the rod end into the Bob–Tach frame **[B]**.

Remove the grease fitting from the Bob–Tach frame for the pivot pin (both sides) **[C]**.

NOTE: The grease fitting at the pivot pin must be removed because the grease can cause a lock and the pivot pin can not be pushed into the Bob–Tach frame.

Loosen the bolt at the Bob–Tach pivot pin (both sides) **[D]**.

Installation: Tighten the bolt to 130–140 ft.–lbs. (176–190 Nm) torque.

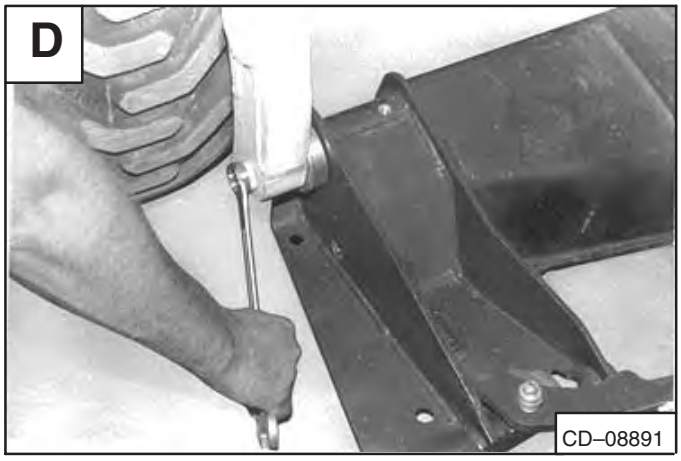

BOB–TACH (50 Series) (Cont'd)

Removal And Installation (Cont'd)

Hit the bolt to start the pivot pin into the bob–Tach frame (both sides) **[A]**.

Remove the bolt. Use a punch to push the pivot pin all the way into the bob–Tach frame.

Installation: A longer bolt may be needed to turn into the pivot pin. Pull the pivot pin into the lift arms.

Remove the bob–Tach frame from the lift arms.

Remove the seal dust cup (both sides) **[B]**.

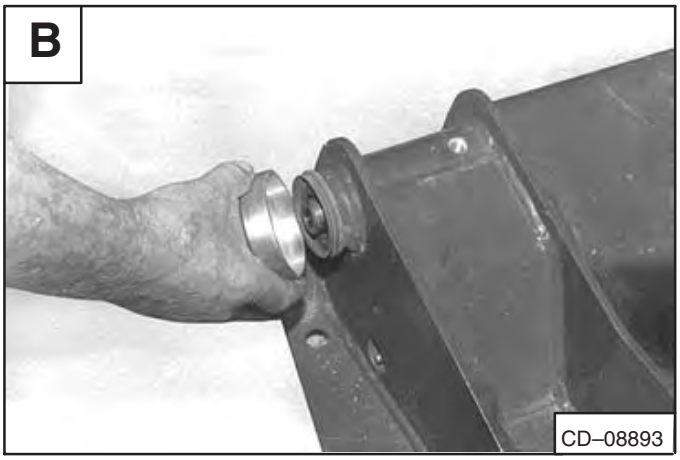

Remove the rubber seal (both sides) **[C]**.

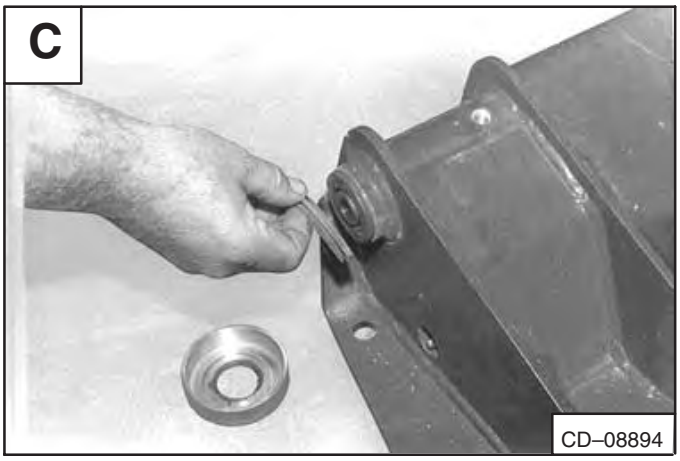

Turn the bolt into the pivot pin. Remove the pivot pin from the bob–Tach frame **[D]**.

Check for wear and damage. Replace the pivot pins as needed.

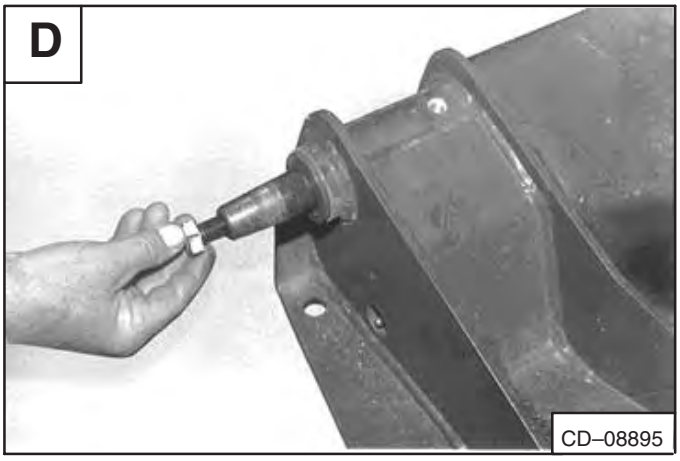

BOB–TACH (50 Series) (Cont'd)

Bob–Tach Lever And Wedge

Use the following procedure to remove and install the Bob–Tach lever, spring and wedge.

Remove the nut from the Bob–Tach lever **[A]**.

Installation: Tighten the nut to 25–28 ft.–lbs. (34–38 Nm) torque.

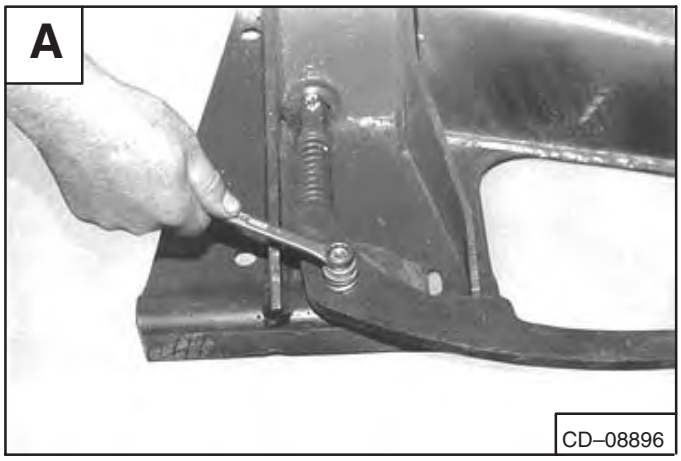

Remove the bushing and spring **[B]**.

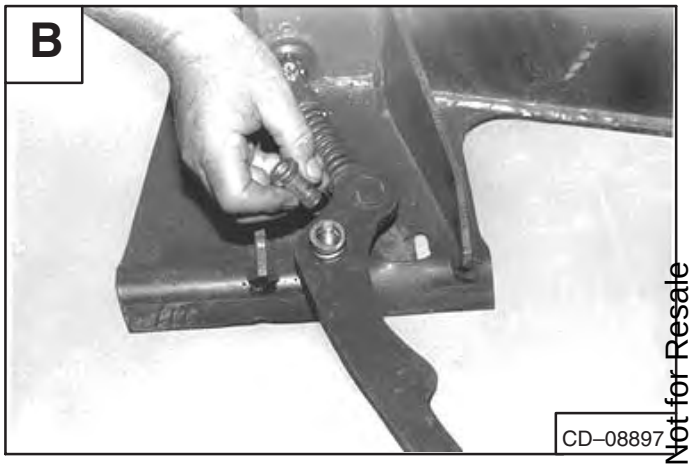

Remove the Bob–Tach lever **[C]**.

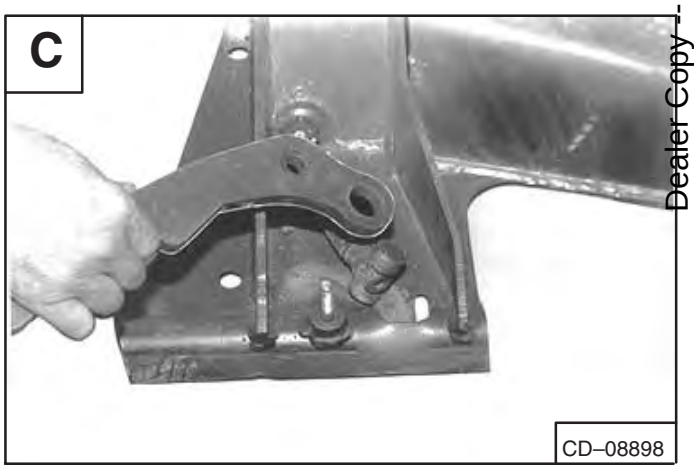

Use a punch and hammer, remove the roll pin from the Bob–Tach wedge and spring bolt clevis assembly **[D]**.

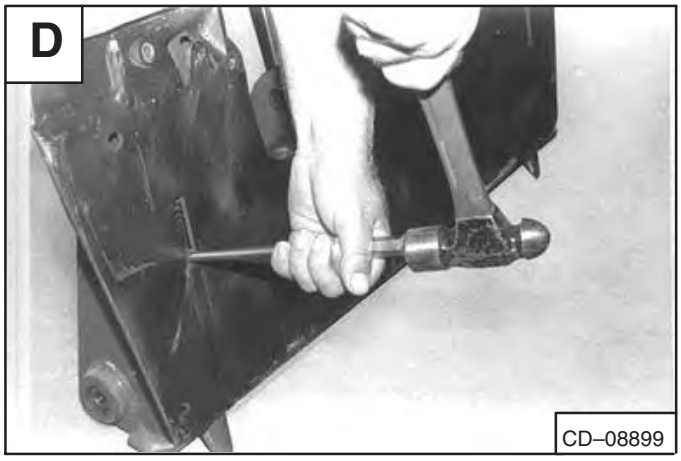

BOB–TACH (50 Series) (Cont'd)

Bob–Tach Lever And Wedge (Cont'd)

Remove the spring, bolt and clevis assembly **[A]**.

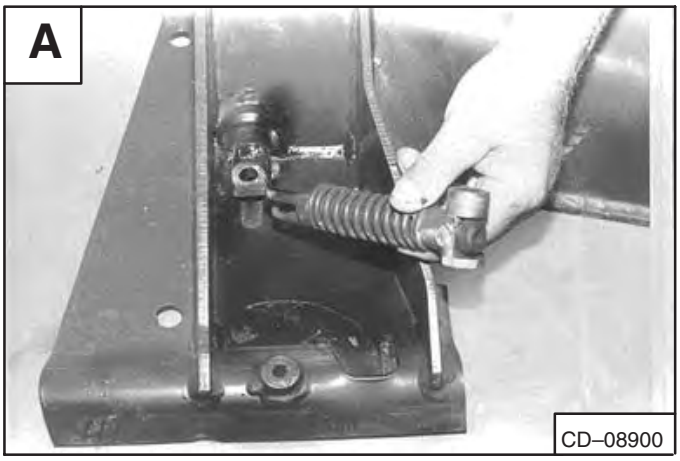

If the spring is damaged, put the assembly in the vise and remove the bolt **[B]**.

Replace the worn or damaged parts as needed.

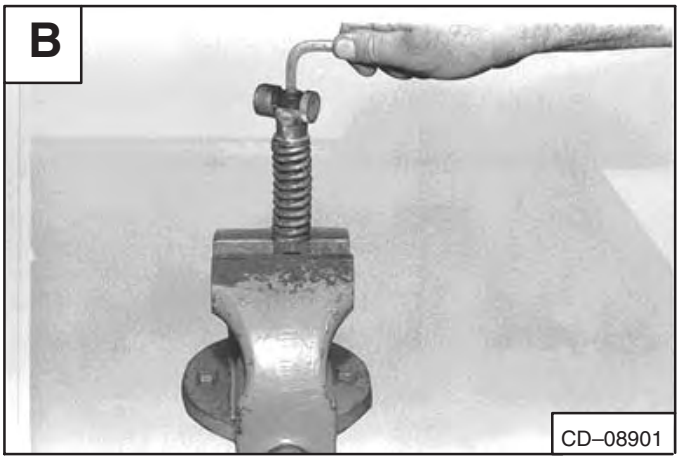

Remove the wedge from the Bob–Tach frame **[C]**.

Always replace bent or broken wedges.

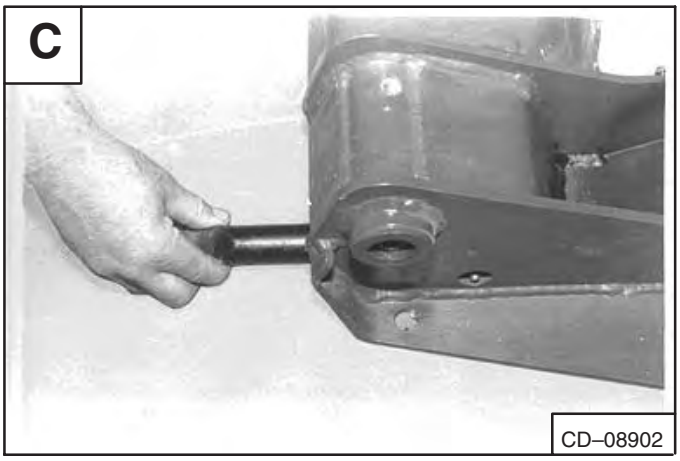

ELECTRICAL SYSTEM

WARNING

Instructions are necessary before operating or servicing machine. Read Operation & Maintenance Manual, and signs (decals) on machine. Follow warnings and instructions in the manuals when making repairs, adjustments or servicing. Check for correct function after adjustments. repairs or service. Failure to follow instructions can cause injury or death.

W–2144–0189

bobcat®

CAB WIRING DIAGRAM (P/N 6566807)

640, 740 Series

(Printed April 1988)

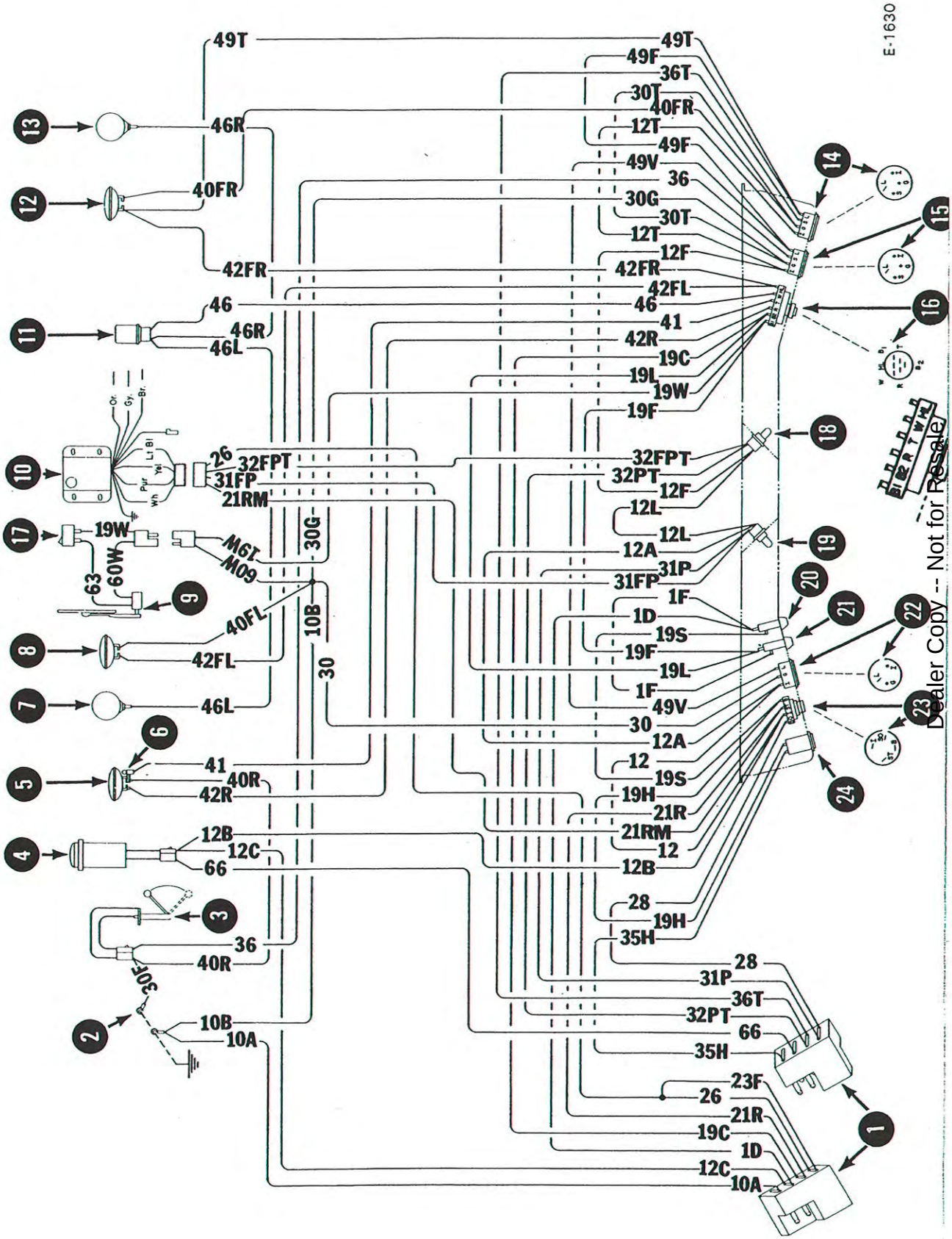

CAB HARNESS

CAB HARNESS

641 (S/N 20001 & Above)
642 (S/N 20001 & Above)
642B (S/N 11001—27350)
643 (S/N 20001 & Above)
741 (S/N 20001 & Above)
742 (S/N 20001 & Above)
743 (S/N 20001 & Above)
743DS (S/N 51001 & Above)

WIRE LEGEND

NO.'s	COLOR	GAUGE
1D	Red	12
1F	Red	16
10A	Black	12
10B	Black	12
12	Orange	16
12A	Orange	18
12B	Orange	16
12C	Orange	16
12F	Orange	18
12L	Orange	18
12T	Orange	18
19C	Red/White	16
19F	Red/White	16
19H	Red/White	18
19L	Red/White	16
19S	Red/White	16
19W	Red/White	16
21R	White	16
21RM	White	16
23F	White/Black	16
26	Lt. Blue	16
28	Lt. Blue/Black	16
30	Black	16
30F	Black	16
30G	Black	16
30T	Black	16

NO.'s	COLOR	GAUGE
31FP	Yellow/Green	18
32FPT	Yellow	18
32PT	Yellow	18
35H	Yellow/Brown	18
36	Purple	16
36T	Purple/White	18
40FL	Black	16
40FR	Black	16
40R	Black	16
41	Pink	16
42FL	Dk. Blue	16
42FR	Dk. Blue	16
42R	Dk. Blue/White	16
46	Brown	16
46L	Brown	16
46R	Brown	16
49F	Gray	16
49T	Gray	16
49V	Gray	16
60W	Black	16
66	Orange/Green	16

PARTS LEGEND

1. Harness Connector
2. Operator Cab Ground
3. * Fuel Sender
4. * Back-Up Alarm (Optional)
5. * Rear Lamp
6. * Tail Lamp
7. * Left Flasher Lamp (Optional)
8. * Left Front Lamp
9. * Wiper (Optional)
10. * Shut Down Module (Optional)
11. * Flasher (Optional)
12. * Right Front Lamp
13. * Right Flasher Lamp (Optional)
14. * Engine Temp. Gauge
15. * Fuel Gauge
16. * Light Switch
17. * Wiper Switch (Optional)
18. "Trans" Warning Light
19. "Eng" Warning Light
20. Fuse-Ignition
21. Fuse-Accessory
22. * Voltmeter
23. Ignition Switch
24. Hourmeter

* Optional for 642B Only

● Tee splice

○ Butt splice

CAB WIRING DIAGRAM (P/N 6566808)

640, 740 Series

(Printed April 1988)

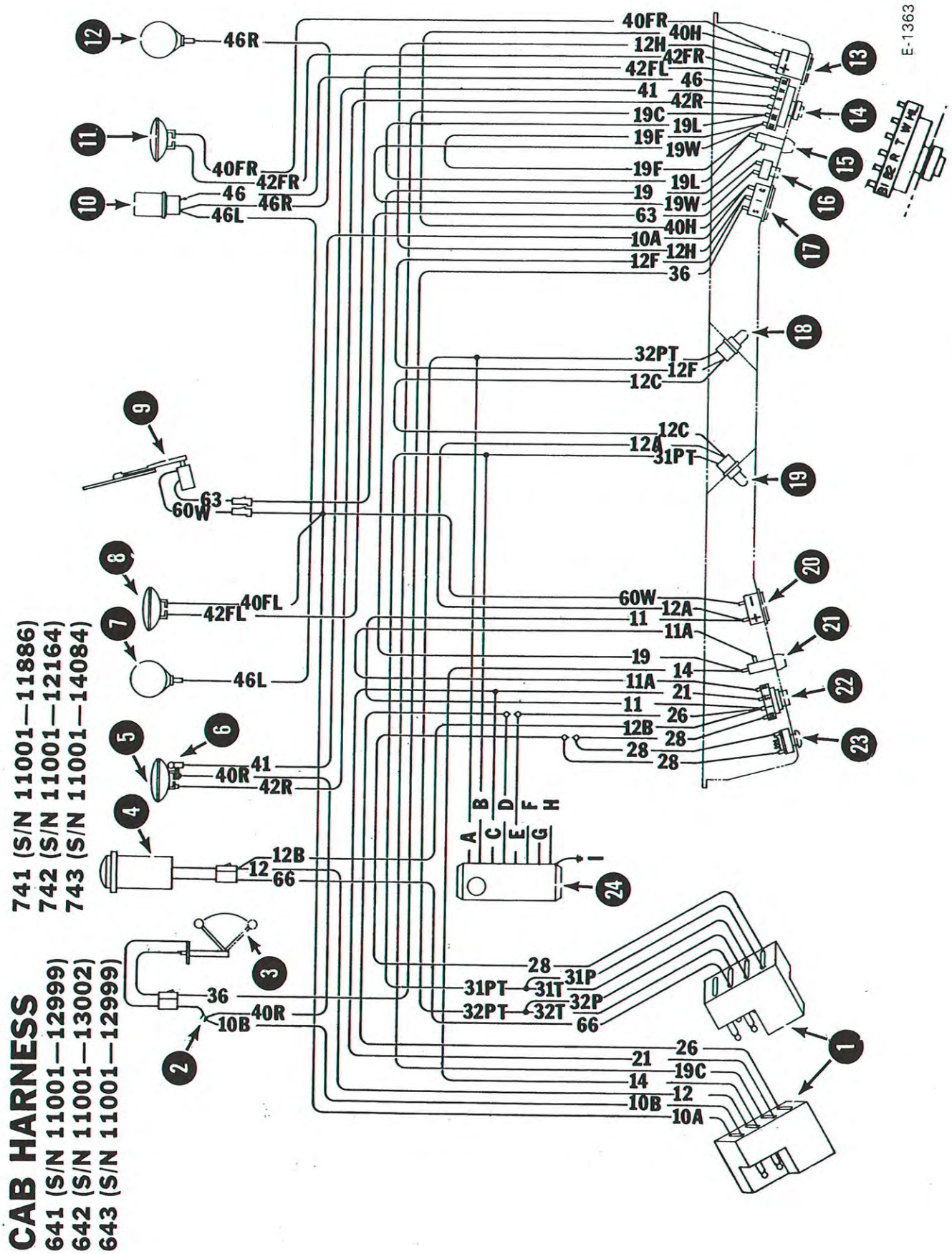

CAB HARNESS

641 (S/N 11001—12999)
642 (S/N 11001—13002)
643 (S/N 11001—12999)

741 (S/N 11001—11886)
742 (S/N 11001—12164)
743 (S/N 11001—14084)

WIRE LEGEND

NO.'s	COLOR	GAUGE
10A	Black	16
10B	Black	16
11	Orange	16
11A	White/Orange	16
12	Orange	16
12A	Orange	18
12B	Orange	16
12C	Orange	18
12F	Orange	18
12H	Orange	18
14	Orange	12
19	Orange/Dk. Blue	16
19C	Orange/Yellow	16
19F	Orange/Dk. Blue	16
19L	Orange/Dk. Blue	16
19W	Orange/Black	16
21	White	16
26	Lt. Blue	16
28	Lt. Blue/Black	18
31P	Purple	18
31PT	Purple	18
31T	White/Purple	18
32P	Yellow	18
32PT	Yellow	18
32T	Yellow/Black	18

NO.'s	COLOR	GAUGE
36	Dk. Green/Yellow	16
40FL	Black	16
40FR	Dk. Blue	16
40H	Black	16
40R	Black	16
41	Pink	16
42FL	Dk. Blue	16
42FR	Dk. Blue	16
42R	Dk. Blue/White	16
46	Brown	16
46L	Brown	16
46R	Brown	16
60W	Black	16
63	Orange/Black	16
66	Orange/Green	16
A	Yellow	16
B	Purple	16
C	White	16
D	Lt. Blue	16
E	Red	16
F	Orange (Not Used)	16
G	Grey (Not Used)	16
H	Brown (Not Used)	16
I	Black	16

PARTS LEGEND

1. Operator Cab Harness Connector
2. Operator Cab Ground
3. Fuel Sender
4. Back-Up Alarm (Optional)
5. Rear Lamp
6. Tail Lamp
7. Left Flasher Lamp (Optional)
8. Left Front Lamp
9. Wiper Motor (Optional)
10. Flasher (Optional)
11. Right Front Lamp
12. Right Flasher Lamp (Optional)
13. Hourmeter
14. Light Switch
15. Accessory Fuse
16. Wiper Switch (Optional)
17. Fuel Gauge
18. "Trans" Warning Lamp
19. "Eng" Warning Lamp
20. Voltmeter
21. Ignition Fuse
22. Ignition Switch
23. Glow Plug Indicator (543 Only)
24. Shut-Down Module (Optional)

● Tee splice

○ Butt splice

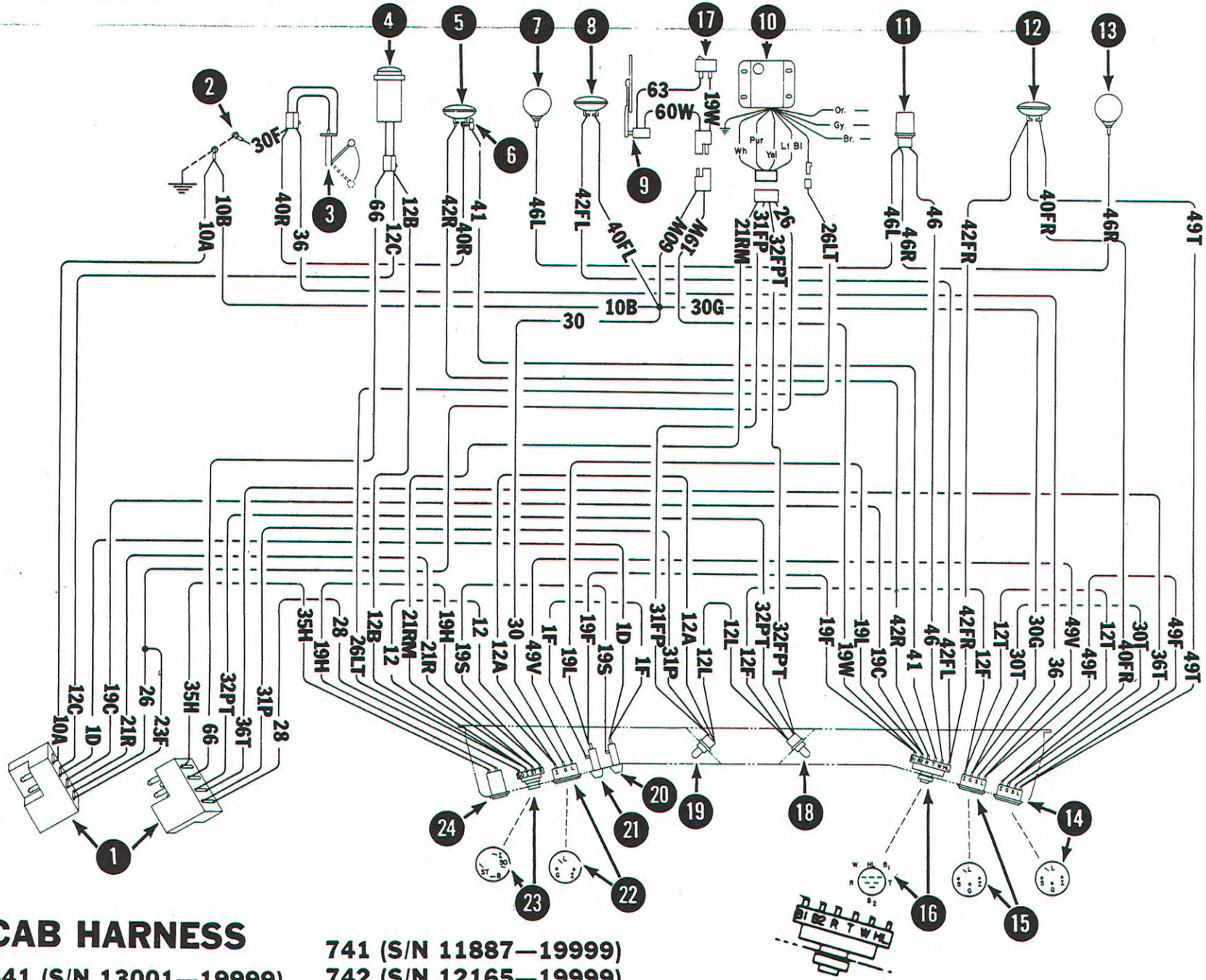

CAB HARNESS

641 (S/N 13001—19999)
642 (S/N 13003—19999)
643 (S/N 13001—19999)

741 (S/N 11887—19999)
742 (S/N 12165—19999)
743 (S/N 14085—19999)
743DS (S/N 50001—50999)

E-1630

CAB HARNESS

641 (S/N 13001—19999)
642 (S/N 13003—19999)
643 (S/N 13001—19999)

741 (S/N 11887—19999)
742 (S/N 12165—19999)
743 (S/N 14085—19999)
743DS (S/N 50001—50999)

WIRE LEGEND

NO.'s	COLOR	GAUGE
1D	Red	12
1F	Red	16
10A	Black	12
10B	Black	12
12	Orange	16
12A	Orange	18
12B	Orange	16
12C	Orange	16
12F	Orange	18
12L	Orange	18
12T	Orange	18
19C	Red/White	16
19F	Red/White	16
19H	Red/White	18
19L	Red/White	16
19S	Red/White	16
19W	Red/White	16
21RM	White	16
23F	White/Black	16
26	Lt. Blue	16
28	Lt. Blue/Black	16
30	Black	16
30F	Black	16
30G	Black	16
30T	Black	16
31FP	Yellow/Green	18

NO.'s	COLOR	GAUGE
32FPT	Yellow	18
35H	Yellow/Brown	18
36	Purple	16
36T	Purple/White	18
40FL	Black	16
40FR	Black	16
40R	Black	16
41	Pink	16
42FL	Dk. Blue	16
42FR	Dk. Blue	16
42R	Dk. Blue/White	16
46	Brown	16
46L	Brown	16
46R	Brown	16
49F	Gray	16
49T	Gray	16
49V	Gray	16
60W	Black16	
63	Orange/Black	16
66	Orange/Black	16

PARTS LEGEND

1. Harness Connector
2. Operator Cab Ground
3. Fuel Sender
4. Back-Up Alarm (Optional)
5. Rear Lamp
6. Tail Lamp
7. Left Flasher Lamp (Optional)
8. Left Front Lamp
9. Wiper (Optional)
10. Shut Down Module (Optional)
11. Flasher (Optional)
12. Right Front Lamp
13. Right Flasher Lamp (Optional)
14. Engine Temp. Gauge
15. Fuel Gauge
16. Light Switch
17. Wiper Switch (Optional)
18. "Trans" Warning Light
19. "Eng" Warning Light
20. Fuse-Ignition
21. Fuse-Accessory
22. Voltmeter
23. Ignition Switch
24. Hourmeter

● Tee splice

○ Butt splice

ENGINE WIRING DIAGRAM (P/N 6566809)

Model 641, 741

(Printed April 1988)

E-1357

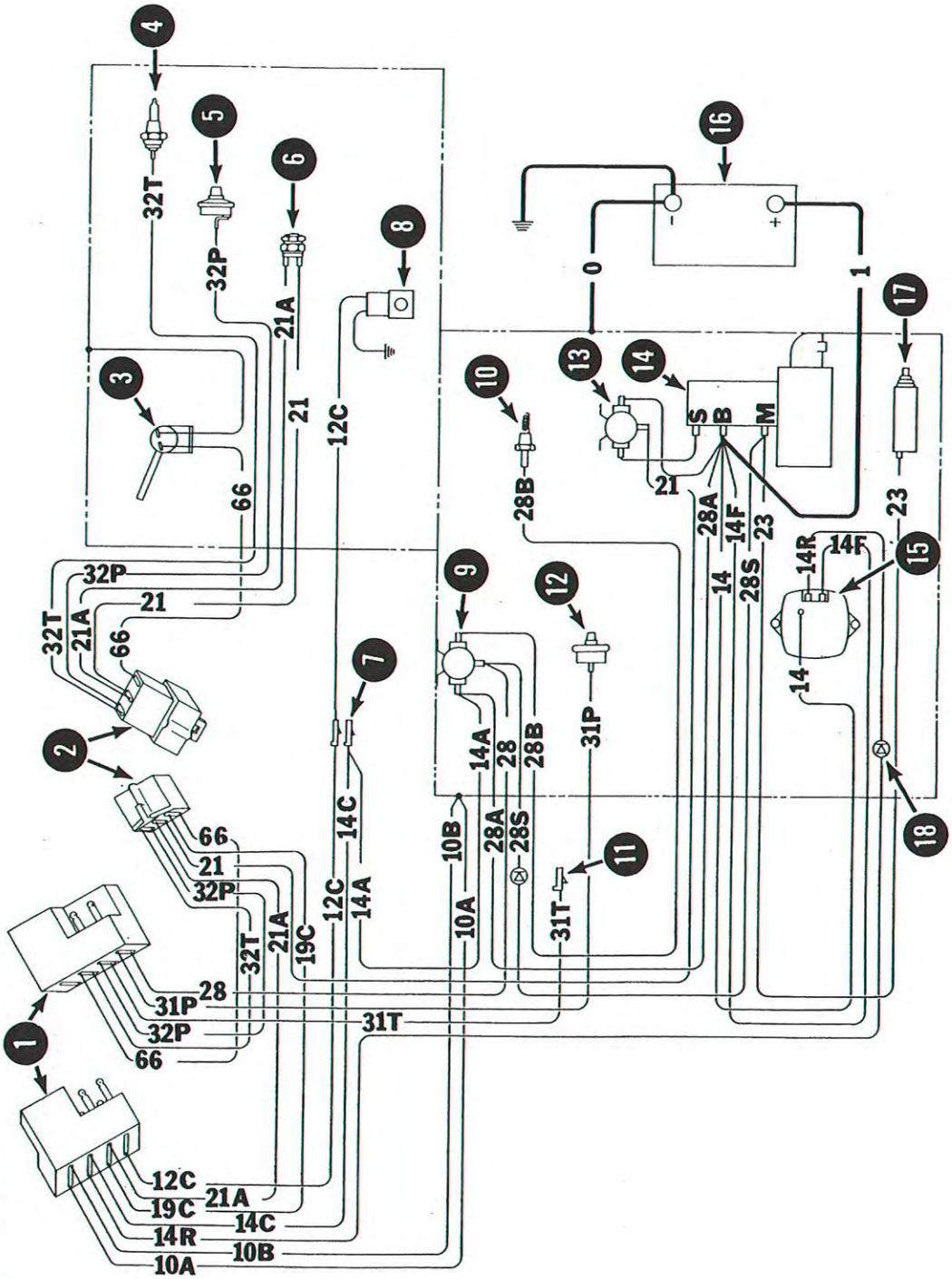

ENGINE HARNESS

641 (S/N 11001—12999)
741 (S/N 11001—11885)

WIRE LEGEND

NO.'s	COLOR	GAUGE
0	Black	Cable
1	Red	Cable
10A	Black	16
10B	Black	16
12C	White/Orange	16
14	Orange	12
14A	Orange	12
14C	Orange	12
14F	Light Green	16
14R	White/Lt. Green	16
19C	Orange/Yellow	16
21	White	16
21A	White	16
23	White/Black	16
28	Lt. Blue/Black	16
28A	Red	10
28B	Lt. Blue/Orange	10
28S	White/Green	16
31P	Purple	16
31T	White/Purple	16
32P	Yellow	16
32T	Yellow/Black	16

NO.'s	COLOR	GAUGE
66	Orange/Green	16

PARTS LEGEND

1. Operator Cab Harness Connector
2. Engine Connector
3. Back-Up Alarm Switch (Optional)
4. Trans. Oil Temperature Sender
5. Trans. Charge Pressure Sender
6. Brake Switch (Future)
7. Unfused Live Accessory
8. Fuel Solenoid Valve (Optional)
9. Pre-Heat Relay Solenoid
10. Pre-Heat Plug
11. Future Temp. Switch
12. Engine Oil Pressure Sender
13. Starter Relay Solenoid
14. Starter
15. Alternator
16. Battery
17. Excess Fuel Solenoid
18. Diode

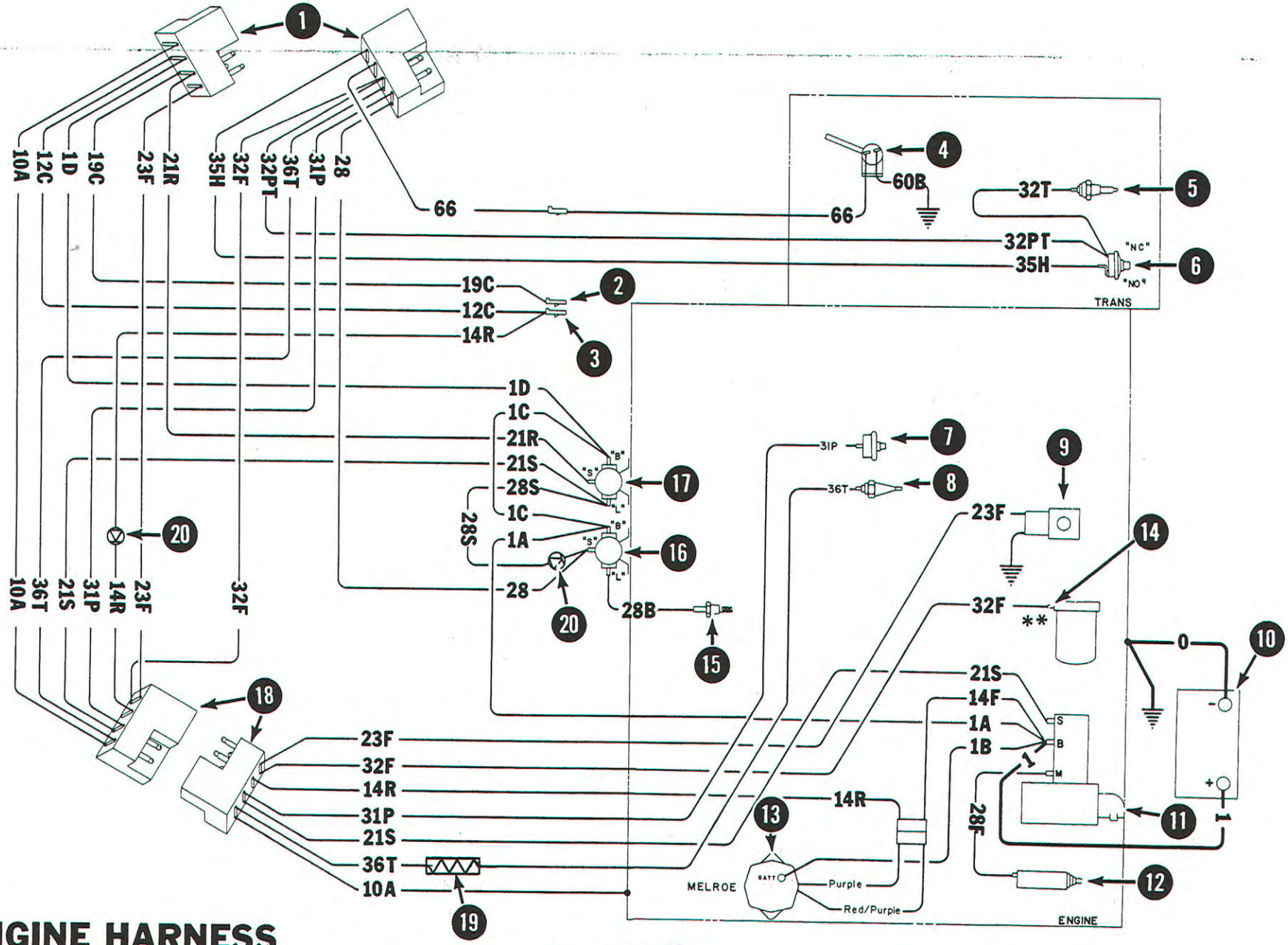

ENGINE HARNESS

* 641 (S/N 13001 — 20408) Delco
* 741 (S/N 11886 — 20320) Delco
641 (S/N 20409 & Above) Melroe
741 (S/N 20321 & Above) Melroe

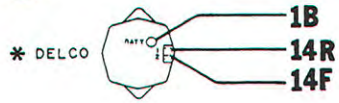

** Hydraulic Fluid Filter Pressure Switch (Item 14, Wire #32F) was added at S/N 15001 for Model 741 and S/N 13209 for Model 641.

E-1517

ENGINE HARNESS

* 641 (S/N 13001 — 20408) Delco
* 741 (S/N 11886 — 20320) Delco
641 (S/N 20409 & Above) Melroe
741 (S/N 20321 & Above) Melroe

WIRE LEGEND

NO.'s	COLOR	GAUGE
0	Black	Cable
1	Red	Cable
1A	Red	8
1B	Red	10
1C	Red	12
1D	Red	12
10A	Black	12
12C	Orange	16
14F	Light Green	16
14R	Lt. Green/White	16
19C	Red/White	12
21R	White	16
21S	White/Lt. Green	12
23F	White/Blue	16
28	Lt. Blue/Black	16
28B	Lt. Blue/Orange	10
28F	Lt. Blue/Dk. Blue	16
28S	Lt. Blue/Yellow	16
31P	Yellow/Lt. Green	16
32F	Yellow/Dk. Blue	16
32PT	Yellow	16
32T	Yellow/Black	16
35H	Yellow/Brown	16
36T	Purple/White	16
60B	Black	16
66	Orange/Green	16

PARTS LEGEND

1. Operator Cab Harness Connector
2. Fused & Live Accessories
3. Fuse & Switched Accessories
4. Back-Up Alarm Switch (Optional)
5. Trans. Fluid Temp. Switch
6. Trans. Charge Pressure Switch
7. Engine Oil Pressure Switch
8. Engine Oil Temp. Sender
9. Fuel Shut-Off Solenoid Valve (Optional)
10. Battery
11. Starter
12. Excess Fuel Solenoid
13. Alternator
14. ** Hydraulic Fluid Filter Pressure Switch
15. Pre-Heat Glow Plug
16. Pre-Heat Relay
17. Starter Relay
18. Chassis Connector
19. Resistor
20. Diode

ENGINE WIRING DIAGRAM (P/N 6566810)

Models 642, 742

(Printed April 1988)

E-1358

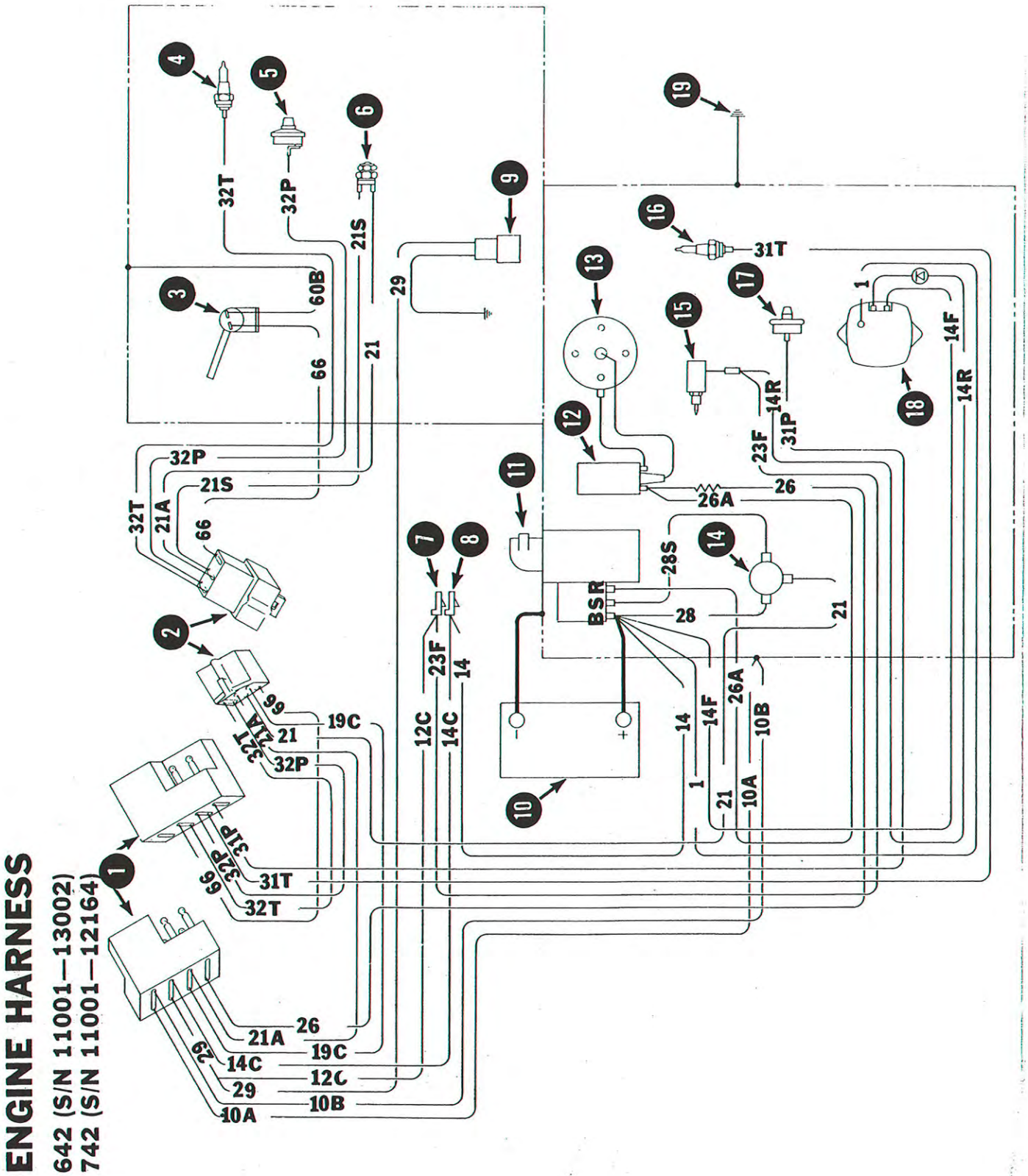

ENGINE HARNESS

642 (S/N 11001—13002)
741 (S/N 11001—12164)

WIRE LEGEND

NO.'s	COLOR	GAUGE
1	Red	12
10A	Black	16
10B	Black	16
12C	White/Orange	16
14	Orange	12
14C	Orange	12
14F	Light Green	16
14R	White/Lt. Green	16
19C	Orange/Yellow	16
21	White	16
21A	White	16
21S	White/Green	16
23F	White/Black	16
26	Optional (1.3-1.4 OHMS Resistance)	
26A	Light Blue	16
28	Lt. Blue/Black	16
28S	White/Green	16
29	White/Red	18
31P	Purple	16
31T	White/Purple	16
32P	Yellow	16
32T	Yellow/Black	16

NO.'s	COLOR	GAUGE
60B	Black	16
66	Orange/Green	16

PARTS LEGEND

1. Operator Cab Harness Connector
2. Chassis Harness Connector
3. Back-Up Alarm Switch (Optional)
4. Trans. Oil Temperature
5. Trans. Charge Pressure
6. Brake Switch (Future Switch)
7. Fused & Switched Feed
8. Unfused Feed
9. Fuel Tank Solenoid
10. Battery
11. Starter
12. Coil
13. Distributor
14. Power Relay
15. Carburetor Fuel Solenoid
16. Engine Water Temp.
17. Engine Oil Pressure
18. Alternator
19. Engine to Frame Ground Diode (Keeps engine from running after ignition is turned off)

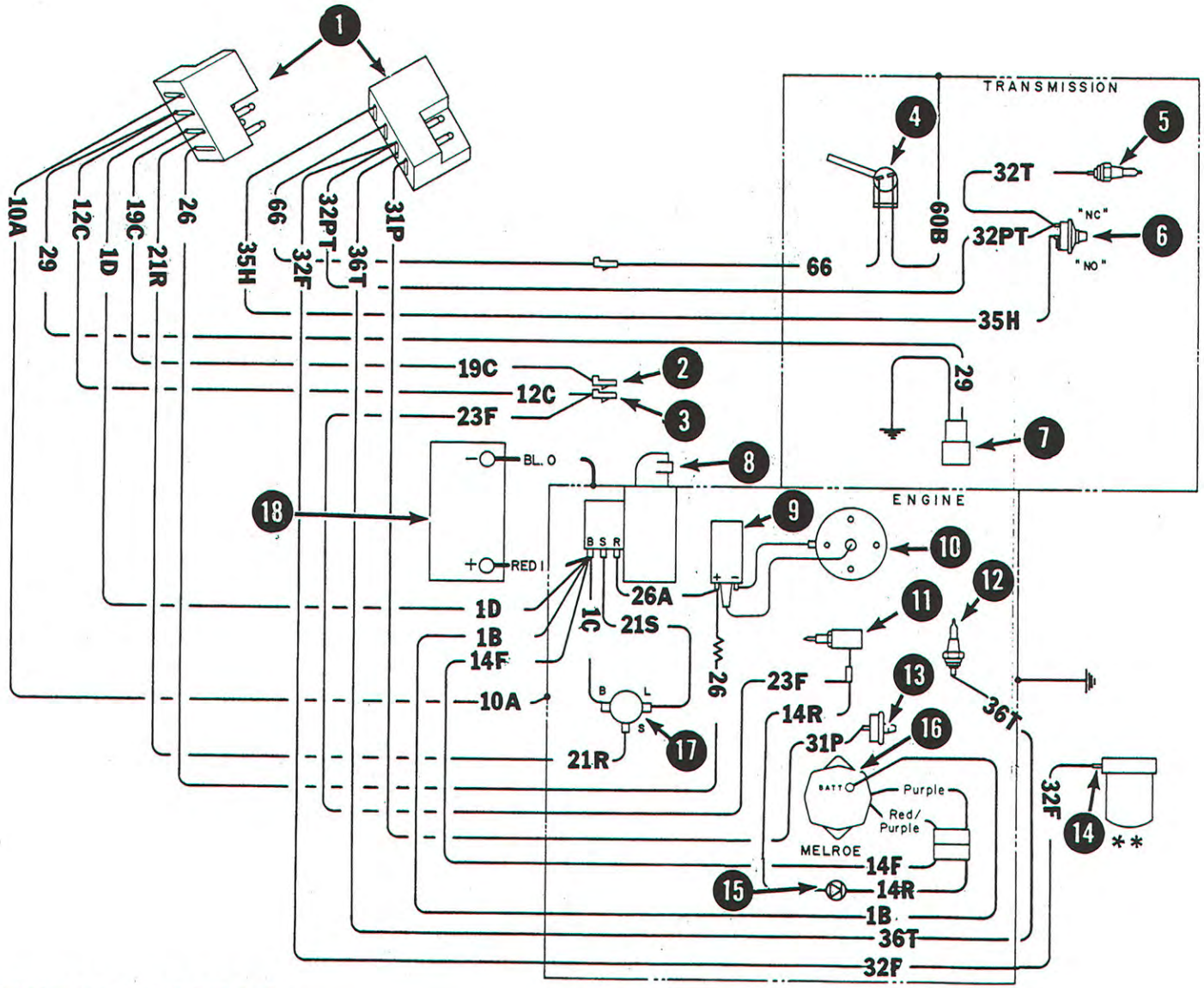

ENGINE HARNESS

* 642 (S/N 13003 — 20840) Delco
* 742 (S/N 12165 — 20881) Delco
742 (S/N 20882 & Above) Melroe

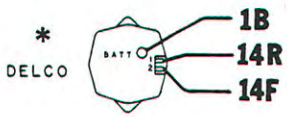

** Hydraulic Fluid Filter Pressure Switch (Item 14, Wire #32F) was added at S/N 15001 for Model 742 and S/N 13524 for Model 642.

E-1481

WIRE LEGEND

NO.'s	COLOR	GAUGE
0	Black	Cable
1	Red	Cable
1B	Red	10
1C	Red	12
1D	Red	12
10A	Black	12
12C	Orange	16
14F	Light Green	16
14R	Lt. Green/White	16
19C	Red/White	16
21R	White	16
21S	White/Green	12
23F	White/Black	16
26	Color Optional (1.3-1.4 OHMS Resistance)	
26A	Lt. Blue/Green	16
29	White/Red	18
31P	Yellow/Lt. Green	16
*32F	Yellow/Dk. Blue	16
32PT	Yellow	16
32T	Yellow/Black	16
35H	Yellow/Brown	16
36T	Purple/White	16

NO.'s	COLOR	GAUGE
60B	Black	16
66	Orange/Green	16

PARTS LEGEND

1. Operator Cab Harness Connector
2. Fused & Live Accessories
3. Fuse & Switched Accessories
4. Back-Up Alarm Switch (Optional)
5. Trans. Fluid Temp. Switch
6. Trans. Charge Pressure Switch
7. Fuel Tank Solenoid
8. Starter
9. Coil
10. Distributor
11. Carburetor Fuel Solenoid
12. Engine Water Temp. Sender
13. Engine Oil Pressure Switch
14. **Hydraulic Fluid Filter Pressure Switch
15. Diode
16. Alternator
17. Starter Relay
18. Battery

ENGINE WIRING DIAGRAM (P/N 6566811)

Models 643, 743

(Printed April 1988)

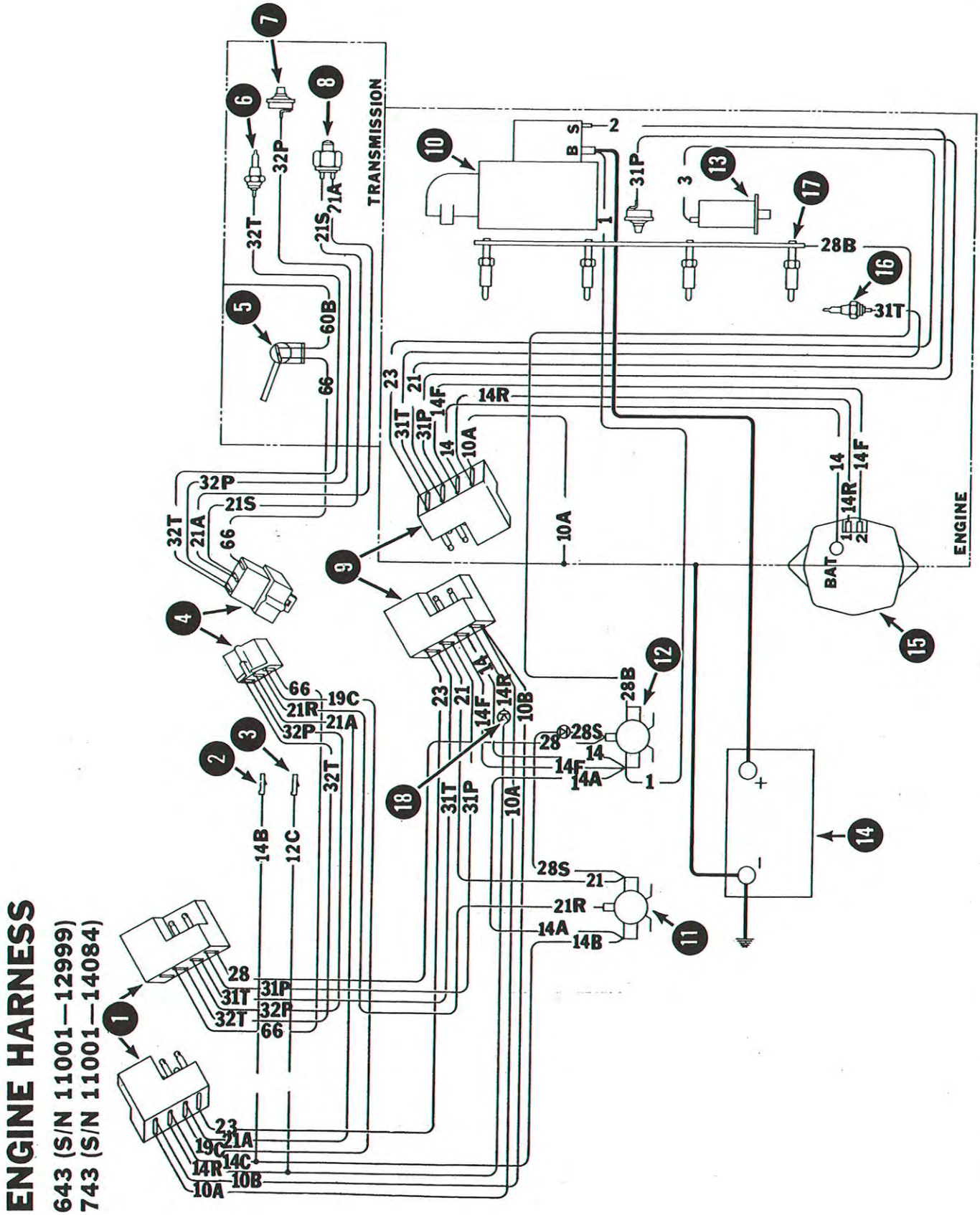

ENGINE HARNESS

643 (S/N 11001—12999)
743 (S/N 11001—14084)

WIRE LEGEND

NO.'s	COLOR	GAUGE
1	Red	8
10A	Black	16
10B	Black	16
12C	White/Orange	16
14	Orange	12
14A	Orange	12
14B	Orange	12
14C	Orange	12
14F	Light Green	16
14R	White/Lt. Green	16
19C	Orange/Yellow	16
21	White	16
21A	White	16
21R	White/Orange	16
21S	White/Green	16
23	White/Black	16
28	Lt. Blue/Black	16
28B	Lt. Blue/Orange	10
28S	White/Green	16
31P	Purple	16
31T	White/Purple	16
32P	Yellow	16
32T	Yellow/Black	16
60B	Black	16
66	Orange/Green	16

PARTS LEGEND

1. Operator Cab Harness Connector
2. Unfuse & Live Accessory
3. Fused & Switch Accessory
4. Chassis Connector
5. Back-Up Alarm Switch (Optional)
6. Trans. Oil Temp. Sender
7. Trans. Charge Pressure Sender
8. Brake Start Switch (Future)
9. Engine Connector
10. Starter
11. Start Relay
12. Pre-Heat Relay
13. Fuel Shut-Off Solenoid (Optional)
14. Battery
15. Alternator
16. Engine Coolant Temp.
17. Engine Glow Plugs
18. Diode

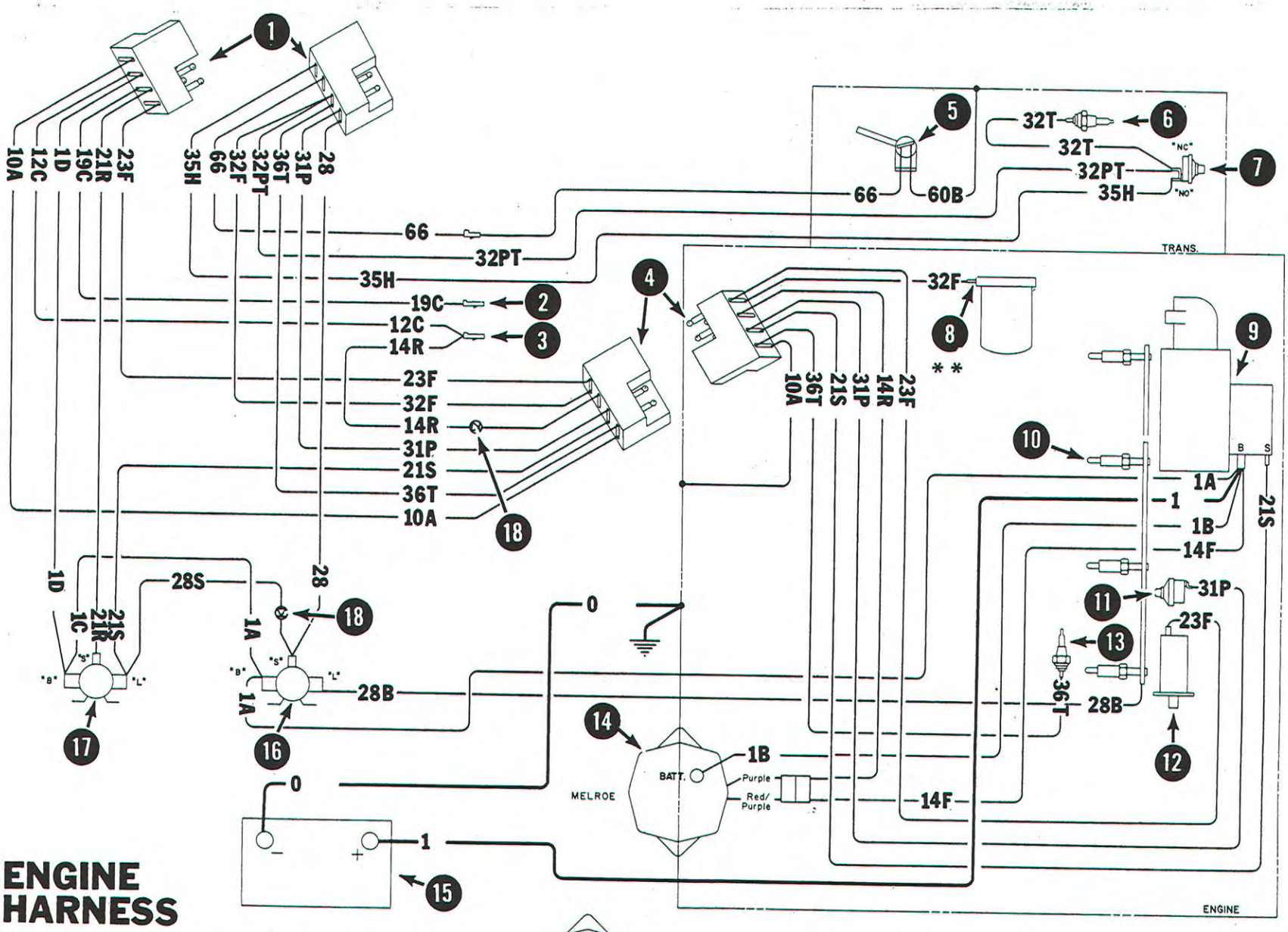

ENGINE HARNESS

* 643 (S/N 13001 — 21230) Delco
* 743 (S/N 14085 — 27387) Delco
643 (S/N 21231 & Above) Melroe
743 (S/N 27388 & Above) Melroe

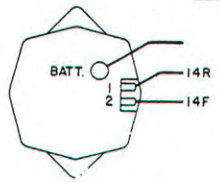

* * Hydraulic fluid pressure switch (Item 8, Wire #32F) was added at S/N 13384 for Model 643 and S/N 15001 for Model 743.

E-1513

ENGINE HARNESS

* 643 (S/N 13001 — 21230) Delco
* 743 (S/N 14085 — 27387) Delco
643 (S/N 21231 & Above) Melroe
743 (S/N 27388 & Above) Melroe

WIRE LEGEND

NO.'s	COLOR	GAUGE
0	Black	Cable
1	Red	Cable
1A	Red	8
1B	Red	10**
1C	Red	12
1D	Red	12
10A	Black	12
12C	Orange	16
14F	Light Green	16
14R	Lt. Green/White	16
19C	Red/White	16
21R	White	16
21S	White/Green	12***
23F	White/Black	16
28	Lt. Blue/Black	16
28B	Lt. Blue/Orange	10
28S	Lt. Blue/Yellow	16
31P	Yellow/Lt. Green	16
32F3	Yellow/Dk. Blue	16
32PT	Yellow	16
32T	Yellow/Black	16
35H	Yellow/Brown	16
36T	Purple/White	16
60B	Black	16
66	Orange/Green	16

** 12 gauge on S/N 13001—21230 for Model 643 and S/N 14085—27387 for Model 743.

*** 16 gauge on S/N 13001—13383 for Model 643 and S/N 14085—14999 for Model 743.

PARTS LEGEND

1. Operator Cab Harness Connector
2. Fused & Live Accessories
3. Fuse & Switched Accessories
4. Chassis Connector
5. Back-Up Alarm Switch (Optional)
6. Trans. Fluid Temp. Switch
7. Trans. Charge Pressure Switch
8. ** Hyd. Fluid Filter Pressure Switch
9. Starter
10. Engine Glow Plugs
11. Engine Oil Pressure Switch
12. Fuel Shut-Off Solenoid (Optional)
13. Engine Coolant Temp. Sender
14. Alternator
15. Battery
16. Pre-Heat Relay
17. Start Relay
18. Diode

CAB WIRING DIAGRAM (P/N 6720033)

640, 740

(Printed April 1989)

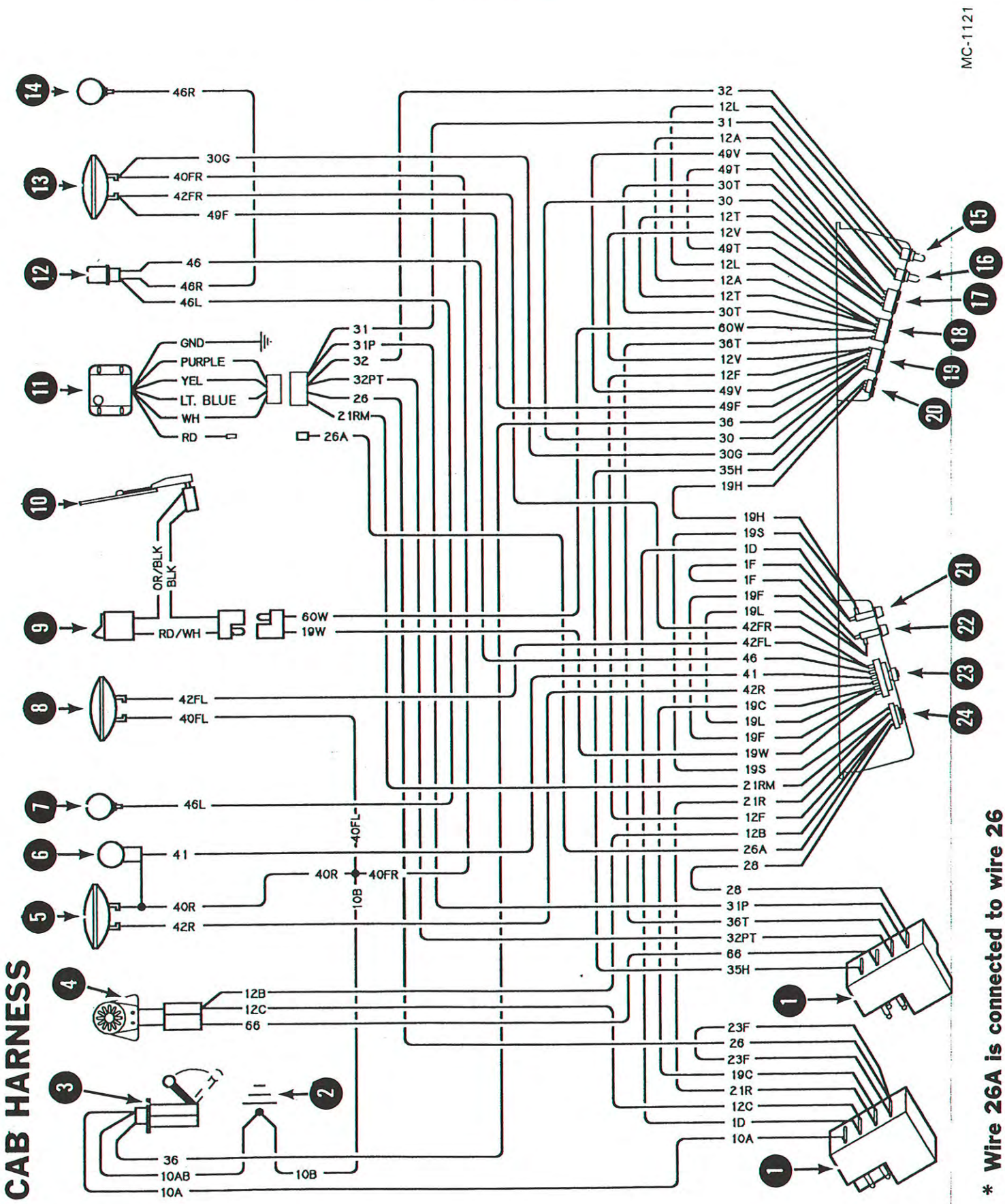

CAB HARNESS

641 (S/N 20847 & Above)
643 (S/N 22556 & Above)
741 (S/N 20723 & Above)
742 (S/N 21734 & Above)
743 (S/N 38568 & Above)
743 DS (S/N 51414 & Above)

WIRE LEGEND

NO.'s	COLOR	GAUGE	NO.'s	COLOR	GAUGE
1D	Red	12	30T	Black	16
1F	Red	16	31	Yellow	18
10A	Black	12	31P	Yellow/Green	18
10B	Black	14	32	Yellow	18
10AB	Black	12	32PT	Yellow	18
12A	Orange	18	35H	Yellow/Brown	18
12B	Orange	16	36	Purple	16
12C	Orange	16	36T	Purple/White	18
12F	Orange	16	40R	Black	16
12L	Orange	18	40FL	Black	16
12T	Orange	18	40FR	Black	16
12V	Orange	18	41	Pink	16
19C	Red/White	16	42FL	Dk. Blue	16
19F	Red/White	16	42FR	Dk. Blue	16
19H	Red/White	18	42R	Dk. Blue/White	16
19L	Red/White	16	46	Brown	16
19S	Red/White	16	46L	Brown	16
19W	Red/White	16	46R	Brown	16
21R	White	16	49F	Gray	18
21RM	White	16	49T	Gray	18
23F	White/Black	16	49V	Gray	18
26	Lt. Blue	16	60W	Black	16

PARTS LEGEND

1. Harness Connectors
2. Ground
3. Fuel Sender
4. Back-Up Alarm
5. Rear Light
6. Tail Light
7. Left Flasher Light (Opt.)
8. Left Front Light
9. Wiper Switch (Opt.)
10. Wiper
11. Shut Down Module (Opt.)
12. Flasher (Opt.)
13. Right Front Light
14. Right Flasher Light (Opt.)
17. Voltmeter
18. Temperature Gauge
19. Fuel Gauge
20. Hourmeter
21. Fuse (Ignition)
22. Fuse (Accessory)
23. Light Switch
24. Ignition Switch

ENGINE WIRING DIAGRAM (P/N 6722270)

Model 643 (S/N 25014 & Above)

(Printed July 1992)

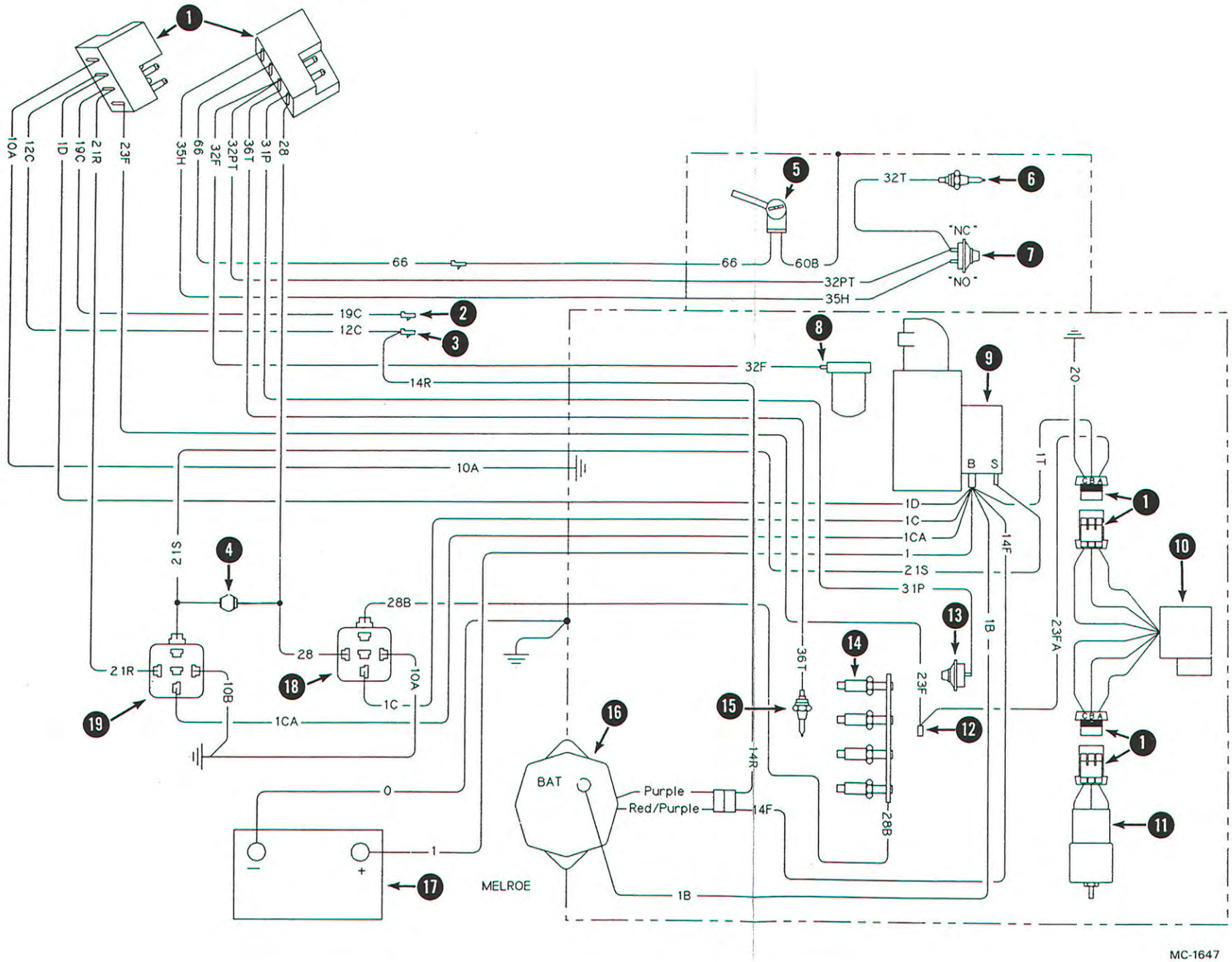

WIRE LEGEND

NO.'s	COLOR	GAUGE
1	Red	8
1B	Red	10
1C	Red	10
1CA	Red	12
1D	Red	12
1T	Red	14
10	Black	12
10A	Black	16
10B	Black	16
12C	Orange	16
14F	Lt. Green	16
14R	Lt. Green/White	16
19C	Red/White	16
20	Black	14
21R	White/Orange	16
21S	White/Black	16
23F	White/Green	16
23FA	Red/Blue	16
28	Lt. Blue/Black	16
28B	Lt. Blue/Orange	10
28S	White/Green	16
31P	Yellow/Lt. Green	16
32F	Yellow/Dk. Blue	16
32PT	Yellow	16
35H	Yellow/Brown	16
36T	Purple/White	16
60B	Black	16
66	Orange/Green	16

PARTS LEGEND

1. Harness Connectors
2. Fused & Live Accessories
3. Fuse & Switched Accessories
4. Diode
5. Back-Up Alarm Switch (Opt.)
6. Transmission Fluid Temperature Switch
7. Transmission Charge Pressure Switch
8. Hydraulic Fluid Filter Pressure Switch
9. Starter Solenoid
10. Timer Module
11. Engine Shut-Off Solenoid
12. Not Used
13. Engine Oil Pressure Switch
14. Engine Glow Plugs
15. Engine Coolant Temperature Switch
16. Alternator
17. Battery
18. Pre-Heat Relay
19. Start Relay

6 ELECTRICAL SYSTEM

6–1 TROUBLESHOOTING

The following troubleshooting chart is provided as an assistance in locating and correcting problems which are most common. Many of the recommended procedures must be done by authorized Bobcat Service Personnel only.

PROBLEM	CAUSE
Battery has a low charge.	1, 2, 3, 4, 5
Alternator will not charge.	1, 2, 5, 9
Starter will not turn the engine.	2, 3, 4, 6, 7, 8

KEY TO CORRECT THE CAUSE
1. Alternator belt is loose or damaged.
2. Battery connections are dirty or loose.
3. Battery is damaged.
4. The ground connection is not making a good contact.
5. The alternator is damaged.
6. The engine is locked.
7. The starter is damaged.
8. The wiring or the solenoid is damaged.
9. *Open* diode in wiring.

6–2 ELECTRICAL SYSTEM INFORMATION

6–2.1 Electrical Circuitry

There are two circuits in the electrical system of the loader:

1. Charging Circuit:
   (a) Alternator
   (b) Internal Regulator
   (c) Warning Indicator Light (ALT)

2. Starting Circuit
   (a) Starter
   (b) Solenoids
   (c) Battery

The ignition switch must be turned ON to activate these circuits.

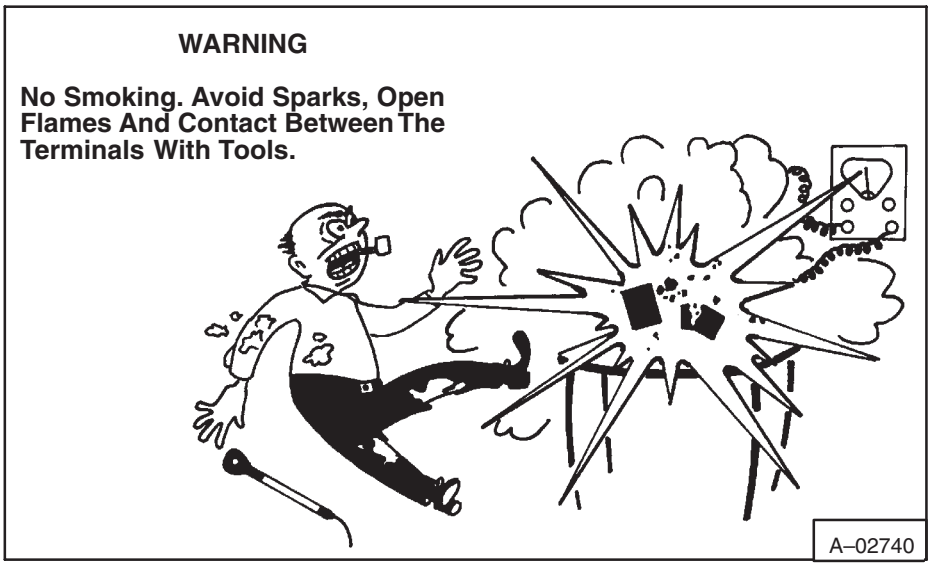

Fig. 6–1 Battery Warning

6–2.2 Safety Procedures For The Battery (Fig. 6–1)

DO NOT remove the vent caps from the battery while charging the battery The battery has a vent cap whichwill decrease the possibility of the battery being exploded by an external spark. Always disconnect the ground cable from the battery before charging the battery.

For more battery information see the Battery Manual P/N 6566047

⚠ WARNING

Batteries contain acid which burns eyes and skin on contact. W ear goggles, protective clothing and rubber gloves to keep acid off body.

In case of acid contact, wash immediately with water. In case of eye contact get prompt medical attention and wash eye with clean, cool water for at least 15 minutes.

If electrolyte is taken internally drink large quantities of water or milk! DO NOT induce vomiting. Get prompt medical attention.

W–2065–1296

⚠ WARNING

Keep arcs, sparks, flames and lighted tobacco away from batteries. When *jumping* from booster battery make final connection (negative) at engine frame.

Do not jump start or charge a frozen or damaged battery. Warm battery to 60 °F. (16°C.) before connecting to a charger. Unplug charger before connecting or disconnecting cables to battery. Never lean over battery while boosting, testing or charging.

Battery gas can explode and cause serious injury.

W–2066–1296

6–2.3 Alternator Damage

Damage to the alternator can occur if:

1. The battery connections are not connected correctly.
2. The alternator is polarized.
3. The wires from the alternator are grounded.

IMPORTANT

Damage to the alternator can occur if:

- **Engine is operated with battery cables disconnected.**
- **Battery cables are connected when using a fast charger or when welding on the loader. (Remove both cables from the battery.)**
- **Extra battery cables (booster cables) are connected wrong.**

I–2023–1285

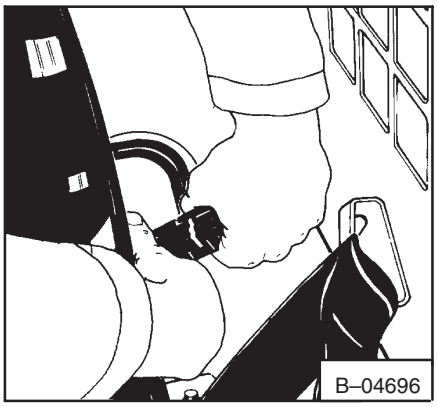

Fig. 6–2 Wire Harness Connector

6–3 BATTERIES

6–3.1 Installing The Battery (See Section 1–7.2, Page 1–12).

6–3.2 Checking The Battery

To make a safe and complete check of the batteries see the Clark Battery Manual P/N 6566047.

The Battery Manual has all the information and specifications needed for checking and servicing the battery. Replace the battery as needed.

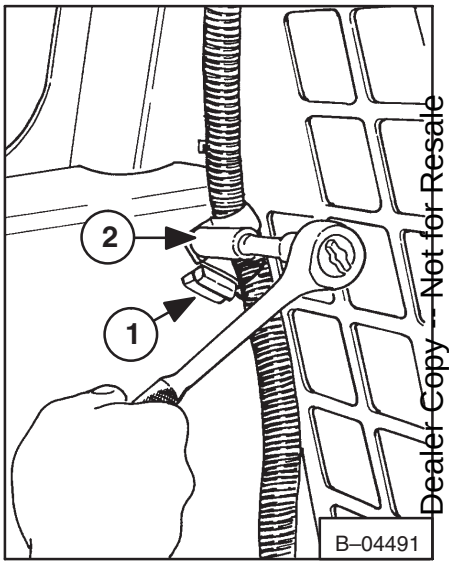

Fig. 6–3 Wire Harness Clip

6–4 WIRE HARNESS FOR THE OPERATOR GUARD

6–4.1 Removing The Wire Harness For The Operator Guard

1. Open the rear door and disconnect the negative cable from the battery.
2. Disconnect the wiring harness connectors behind the seat (Fig. 6–2).
3. Disconnect the connector at the fuel sender wires (Fig. 6–3, Item 1).
4. Remove the harness clip (Fig. 6–3, Item 2).
5. Remove the rear light from the housing. Disconnect the wires from the rear light (Fig. 6–4).

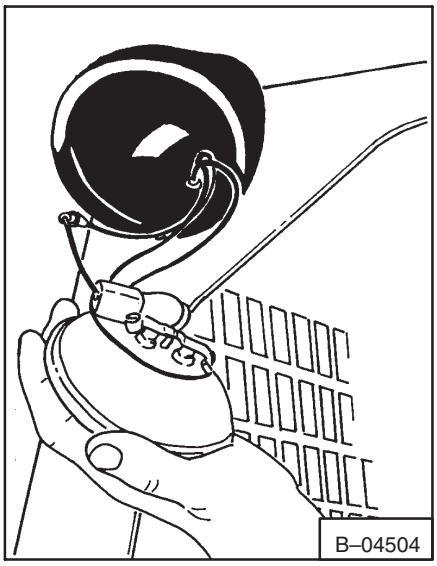

Fig. 6–4 Rear Light

6. Remove all the harness clips on the operator guard up to the dash panel (Fig. 6–5).

7. Remove the dash panel, the nuts and the bolts (Fig. 6–6).

8. Remove the front lights from the housing. Disconnect the wires from the front lights (Fig. 6–7).

9. Pull dash panel down and remove the wires for the front lights from the rubber grommets (Fig. 6–8).

10. Remove the dash panel from the loader and put it on a work bench.

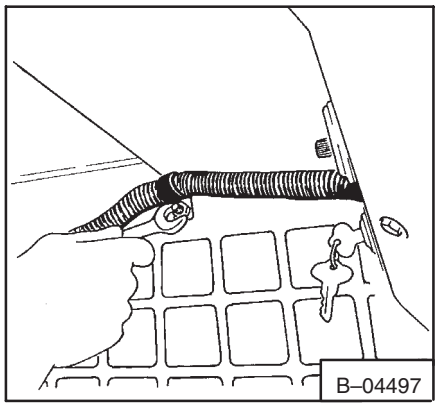

Fig. 6–5 Removing Clip

Position the new wiring harness along the side of the dash panel, disconnect the wire from the dash panel and find the wire in the new wiring harness and connect it to the same terminal. See the WIRING DIAGRAM at the front of this section.

6–4.2 Installing The Wire Harness For The Operator Guard

1. After the new wiring harness is installed in the dash panel make sure that all the terminals are tight.

2. Install the dash panel in the loader.

3. Put the wires for the front light through the rubber grommets (Fig. 6–8).

4. Put the dash panel in the correct location and install the bolts and the nuts and tighten.

5. Connect wires to the front lights (Fig. 6–7). Install the front lights into the rubber housings.

6. Install the harness clips along the side of the operator guard (Fig. 6–5).

7. Put the wire for the rear light through the rubber grommet and connect the wires to the rear light (Fig. 6–4).

8. Connect the wires to the fuel sender (Fig. 6–3, Item 1).

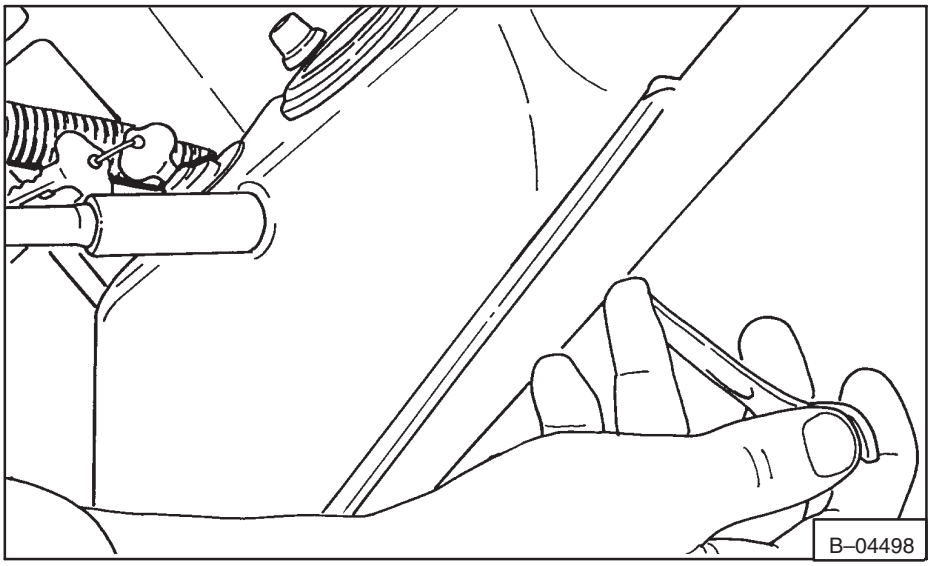

Fig. 6–6 Dash Panel Bolts And Nuts

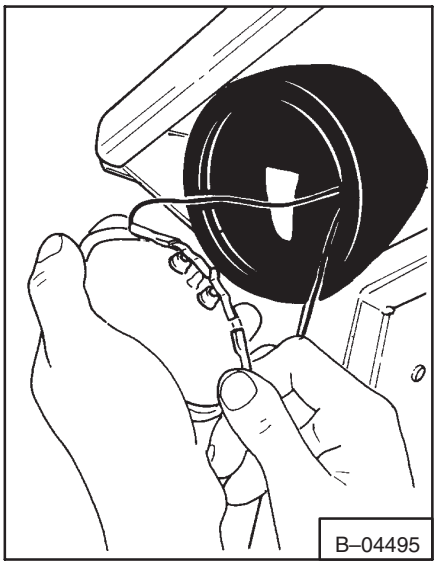

Fig. 6–7 Front Light

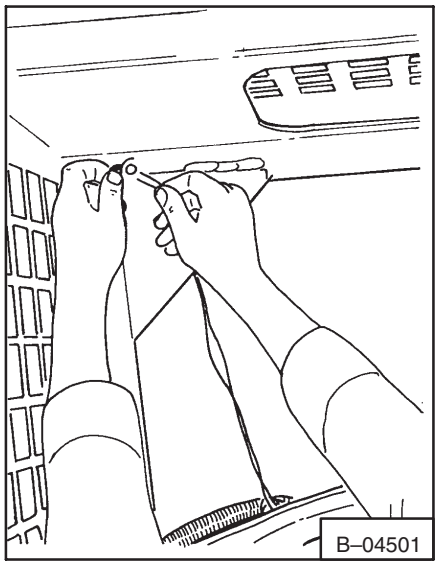

Fig. 6–8 Rubber Grommets

9. Connect the wire harness connectors (Fig. 6–2).
10. Connect the negative cable to the battery.
11. Close the rear door.

6–5 WIRE HARNESS FOR THE ENGINE

6–5.1 Removing The Wire Harness For The Engine

1. Open the rear door, disconnect the negative cable from the battery.
2. Disconnect the wires at all the engine terminal locations.
3. Remove the wiring harness from the engine compartment.

6–5.2 Installing The Wire Harness For The Engine

1. Position the new harness in the engine compartment.
2. Connect the wires to the correct terminals (See the electrical chart in the front of the section).
3. Connect the harness connector.
4. Connect the negative battery cable.
5. Close the rear door.

6–6 ALTERNATOR

6–6.1 Checking The Alternator

WARNING

Put jackstands under the front axles and rear corners of the frame before running the engine for service. Failure to use jackstands can allow the machine to fall or move and cause injury or death.

W–2017–0286

To check the wiring harness, use the following procedure:

1. Turn the ignition switch to the ON position.
2. Connect the voltmeter between the ground and the No. 1 terminal (Fig. 6–9). Check for 12 volts.
3. Connect the voltmeter between the ground and the No. 2 terminal (Fig. 6–9). Check for 12 volts.
4. Connect the voltmeter between the ground and the BA T terminal (Fig. 6–9). Check for 12 volts.
5. If any of the test in steps 2, 3 & 4 show zero voltage, the wiring has a defect.

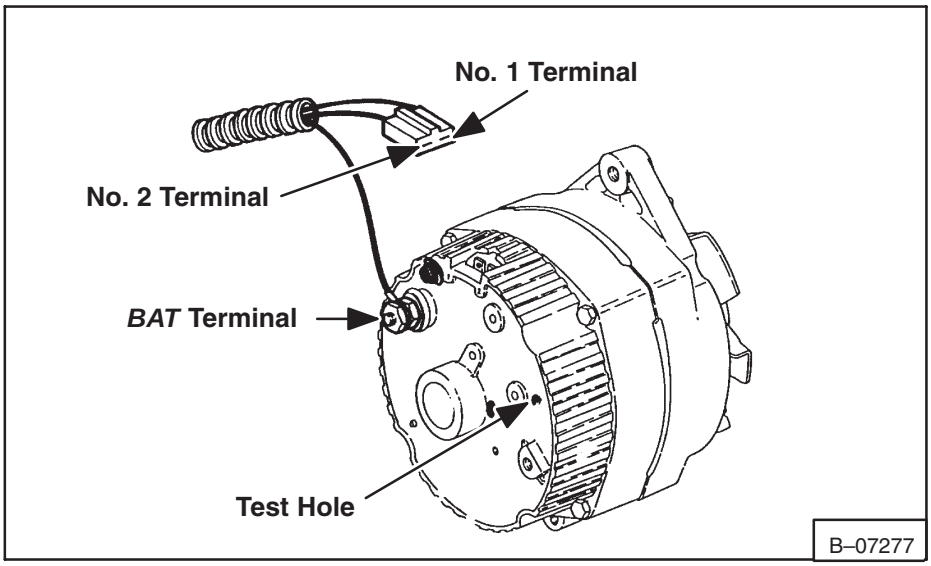

Fig. 6–9 Terminal Location For The Alternator

6. Find the defect in the wiring and repair as needed. Check the voltage again.

Use the following procedure to check the alternator output:

1. Stop the engine and open the rear door.
2. Disconnect the negative cable from the battery.
3. Disconnect the *Bat* connector at the alternator and connect it to one connector of an ammeter. Connect the other side of the ammeter to the *Bat* terminal of the alternator.
4. Connect the negative cable to the battery.
5. Disconnect the fuel shut–off solenoid wire or remove the coil wire.
6. Find the defect in the wiring and repair as needed. Check the voltage again.
7. Connect the fuel shut–off solenoid wire or the coil wire. Start the engine and run the engine at full engine RPM.
8. The ammeter reading must be at least 10% of the rated capacity (See Specifications).
9. If the reading is correct the alternator is good. If the reading is more or less than 10% of rated amperage check the regulator.

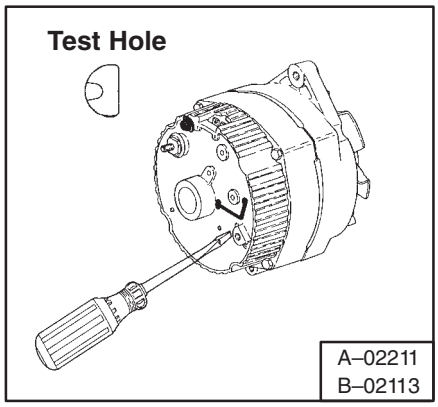

Fig. 6–10 Checking Regulator

Check the regulator using the following procedure:

1. Use Steps 2 thru 7 for alternator output check.
2. Put a small screwdriver in the test hole (Fig. 6–10).
3. If the ammeter is within 10% of the rated capacity marked on the alternator case, the regulator is good. If the ammeter is not within 10% of the rated amperage check the diode trio, the rectifier , the stator or the rotor (See Paragraph 6–6.4 *Repairing The Alternator).*

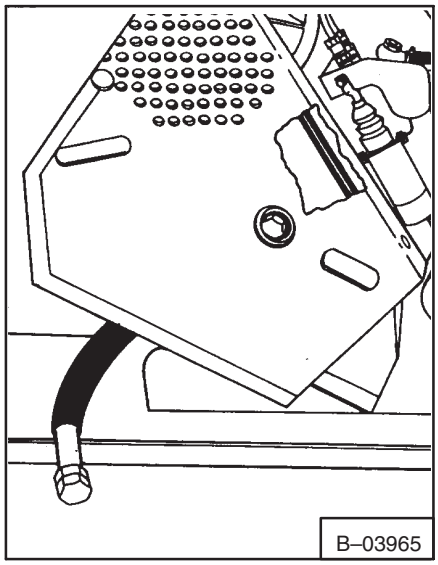

Fig. 6–11 Removing The Belt Shield(641)

6–6.2 Removing The Alternator

1. Stop the engine. Open the rear door.
2. Disconnect the negative cable from the battery.
3. Remove the engine belt shield from the engine (Fig. 6–1 1, 6–12 & 6–13).

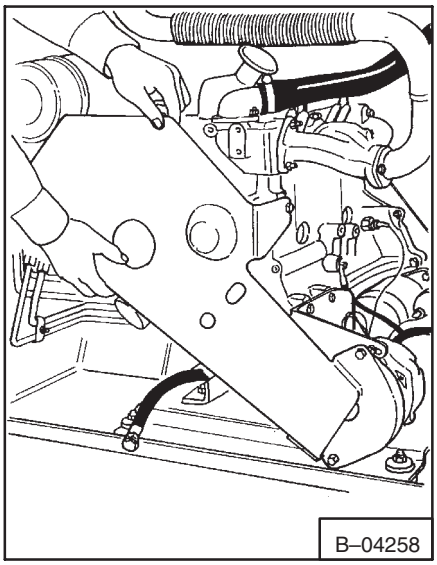

Fig. 6–12 Removing The Belt Shield(642)

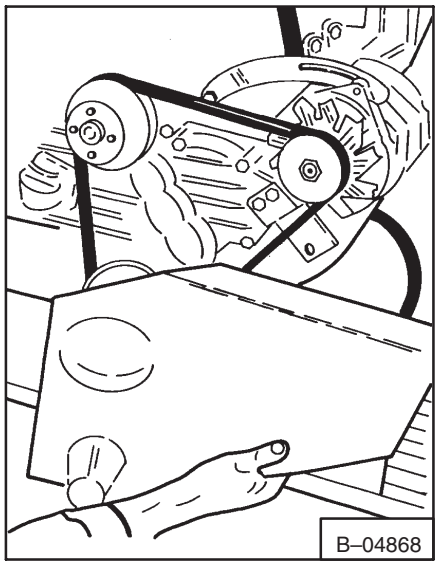

Fig. 6–13 Removing The Belt Shield(643)

4. Remove the alternator mounting bolts (Fig. 6–14, 6–15 & 6–16).

5. Remove the connector from the alternator (Fig. 6–17).

6. Remove the wire from the alternator (Fig. 6–18).

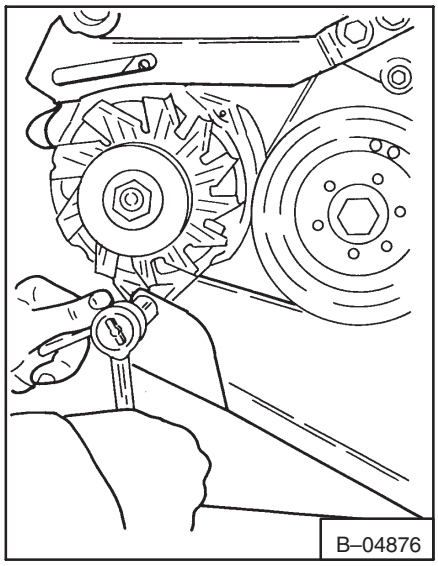

Fig. 6–14 Removing Alternator Bolts (641)

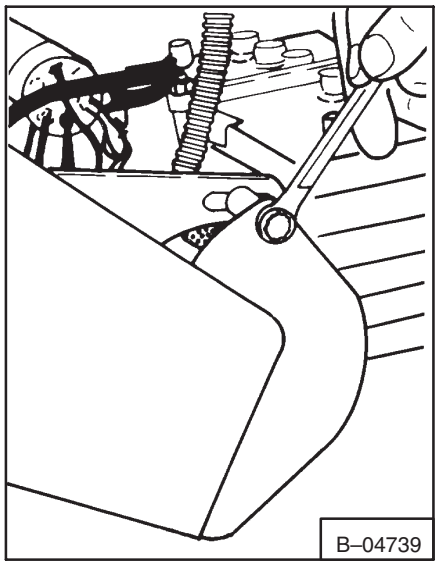

Fig. 6–15 Removing Alternator Bolts (642)

6–6.3 Repairing The Alternator

1. Put a mark across the alternator case for the correct assembly.

2. Remove the sheave from the shaft.

3. Remove the four bolts that hold the case together.

4. Use a screwdriver to separate the case.

5. Remove the rotor from the housing.

6. Remove the three nuts holding the stator wires to the housing. Remove the stator.

7. Disconnect the diode trio.

8. Connect an ohmmeter between one slip ring and the shaft. There must be maximum resistance (Fig. 6–19).

9. Connect an ohmmeter between both slip rings. There must be 2.5 to 3.0 ohms of resistance. If not the rotor is damaged.

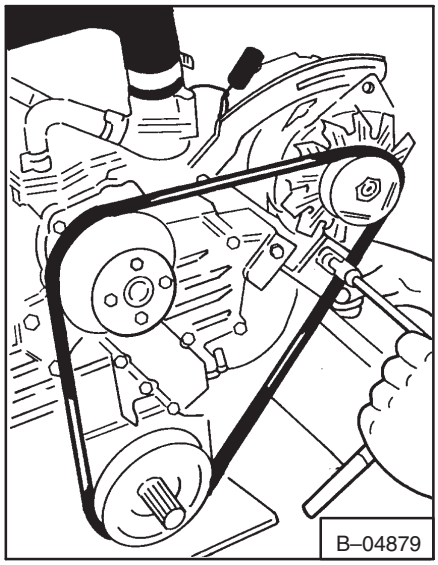

Fig. 6–16 Removing Alternator Bolts (643)

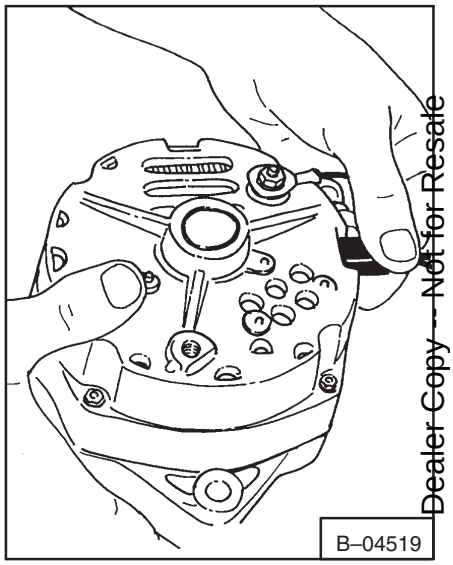

Fig. 6–17 Removing Alternator Connector

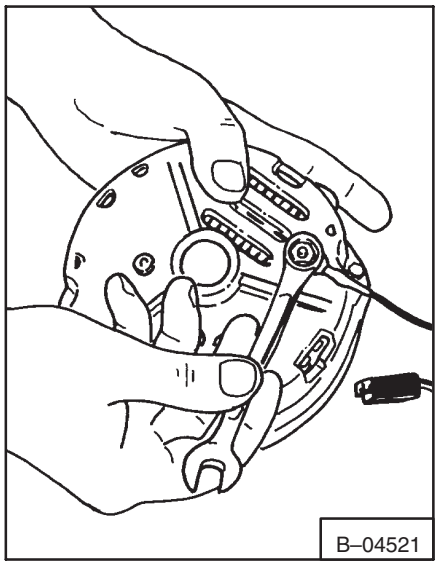

Fig. 6–18 Removing Alternator Wire

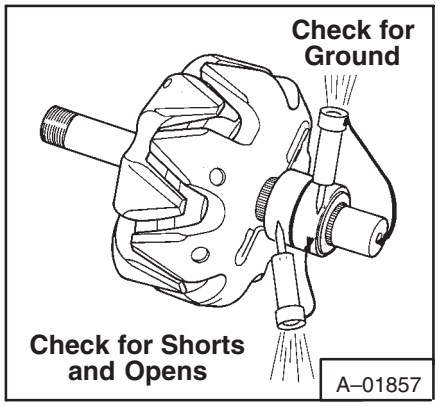

Fig. 6–19 Checking Rotor

10. Connect a test light between the center wire and one of the outside wires on the stator (Fig. 6–20). If the light does not come ON there is damage.

11. Connect the test light between the center wire and the outside wire (Fig. 6–21). If the light does not come on there is damage.

12. Connect the test light between one of the wires and the stator frame (Fig. 6–21). If the light comes on there is damage.

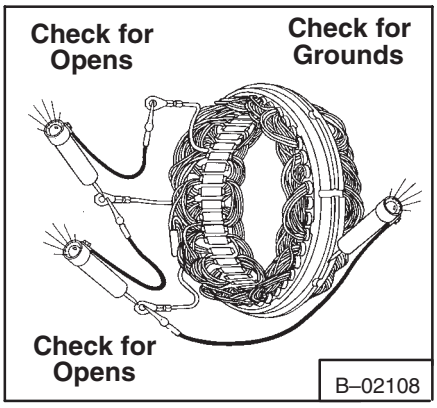

Fig. 6–20 Checking Stator

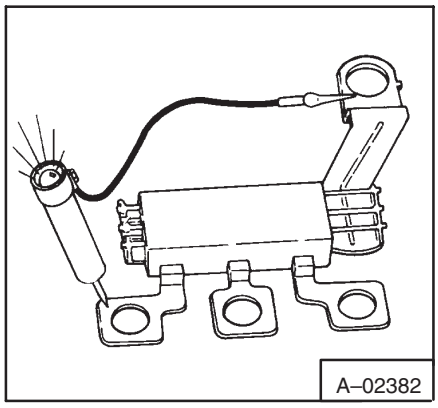

Fig. 6–21 Checking Diode Trio

IMPORTANT

Do not use voltage which is more than circuit voltage to check the diode trio o the rectifier on the alternator.

I–2026–0597

13. Connect a D.C. test light between the single connection and to one of the three connections (Fig. 6–21). Connect the tester in the opposite direction. The light must come ON in one direction but not in the other direction.

14. Use step 13 when checking the other diodes.

15. Connect the test light between the center connections and each outside connections. If the light comes ON on either side there is damage.

16. Remove the rectifier from the alternator.

17. Connect a test light between a connection and the insulated heat sink (Fig. 6–22). Connect the test light in the other direction. The light must come on in one direction but not in the other direction.

18. Connect the test light between the same connection and the grounded heat sink (Fig. 6–22). Connect the tester in the other direction. The light must come on in one direction but not in the other direction.

19. Use steps 17 and 18 on the other two connections. If any of the tests are bad replace the rectifier.

20. Install the rectifier.

21. If the regulator is removed make sure when installing the regulator to replace the two insulated washers and spacers (Fig. 6–23).

22. Install the diode trio.

23. Install the stator and connect the wires.

24. Install the new brushes and put a straight wire through the housing to hold the brushes in the up position (Fig. 6–24).

25. Install the rotor and remove the wire.

26. Assemble the alternator. Install and tighten the bolts.

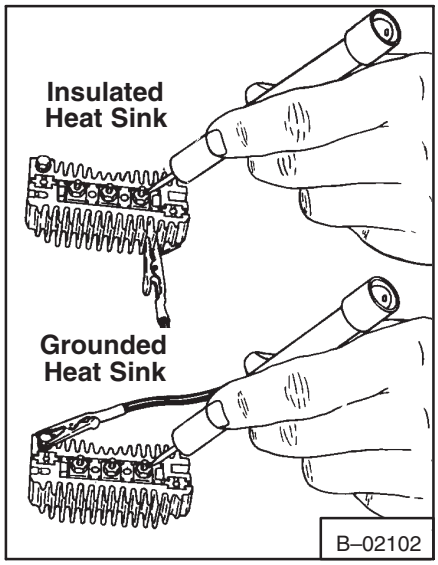

Fig. 6–22 Checking Rectifier

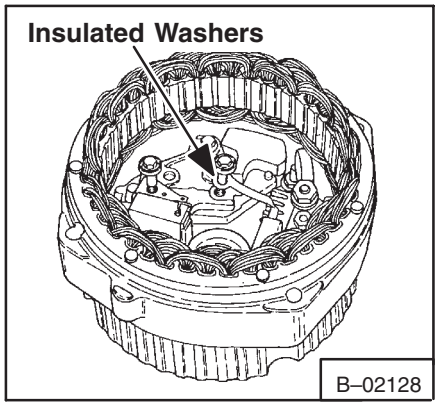

Fig. 6–23 Insulated Washers

27. Install the sheave and tighten the nut.

6–6.4 Installing The Alternator

1. Connect the wire to the alternator (Fig. 6–25).
2. Connect the wire connector to the alternator.
3. Put the alternator between the mounting brackets and install the mounting bolts. Do not tighten the bolts now.
4. Install the alternator belt.
5. Install the engine belt shield and tighten the bolts.
6. Connect the negative cable to the battery.
7. See Paragraph 1–6, Page 1–12 and adjust the belt on the alternator.

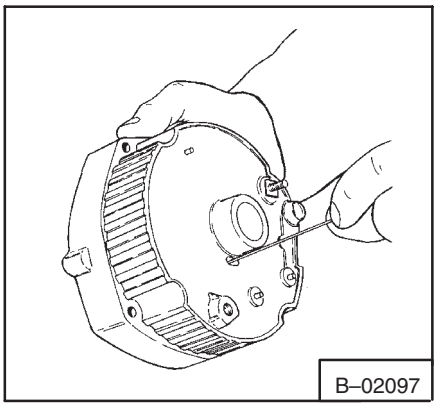

Fig. 6–24 Installing Brushes

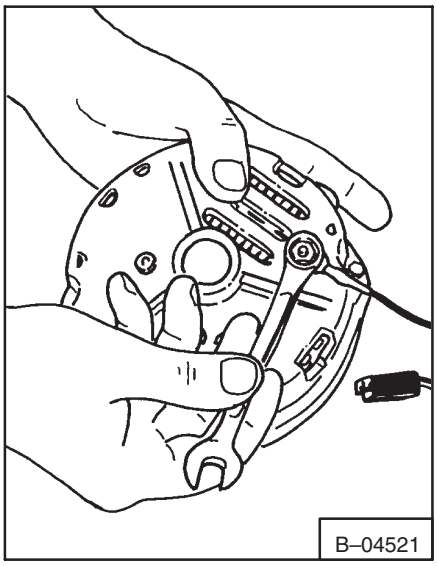

Fig. 6–25 Installing Wire

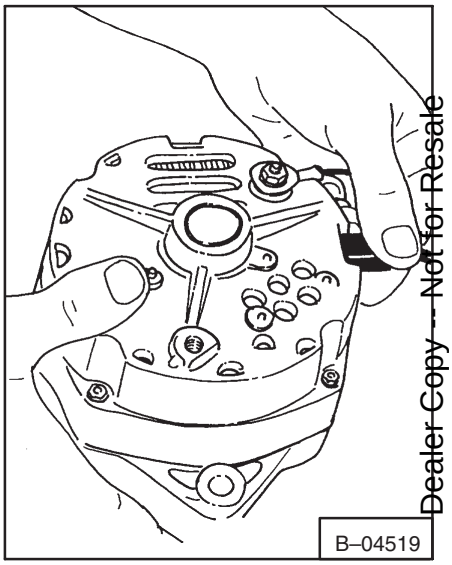

Fig. 6–26 Installing Connector

6–7 STARTER

6–7.1 Checking The Starter

WARNING

Put jackstands under the front axles and rear corners of the frame before running the engine for service. Failure to use jackstands can allow the machine to fall or move and cause injury or death.

W–2017–0286

1. Make sure the ignition is in the OFF position. Make sure the batteries have a full charge and the cable connections are clean and tight.
2. Connect a jumper wire between the *S* connection and the *BAT* connection (Fig. 6–27). If the starter turns but does not turn the engine, there is a defect in the starter drive. If the starter does not turn, continue to Step 3.
3. Connect a jumper wire between the *M* connection and the *BAT* connection (Fig. 6–28). If the starter turns, the defect is in the solenoid. If the starter does not turn, the defect is in the starter.

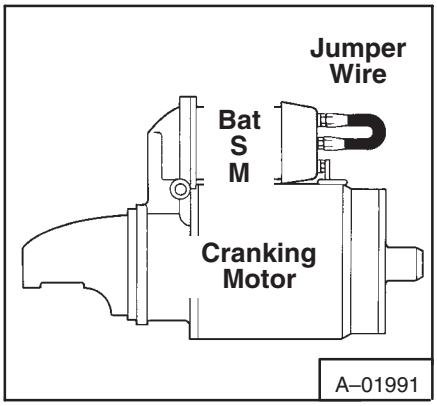

Fig. 6–27 Checking Starter

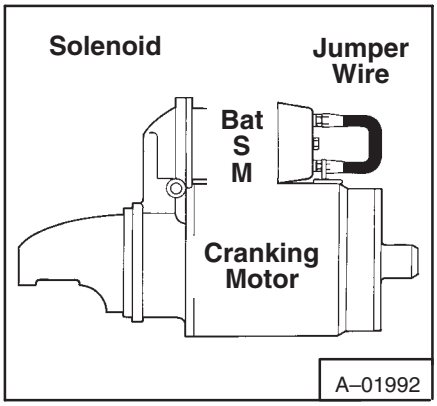

Fig. 6–28 Checking Solenoid

6–7.2 Removing The Starter

741 See Section 7A–19, Page 7A–25.
742 See Section 7B–43, Page 7B–39.
743 See Section 7C–11, Page 7C–28.

6–7.3 Repairing The Starter

1. Disconnect the connector link between the solenoid and the starter.

2. Remove the solenoid bolts (Fig. 6–29, Item 1) that fasten the solenoid to the drive end of the starter.

3. Remove the solenoid (Fig. 6–29, Item 2).

4. Remove the plunger spring (Fig. 6–29, Item 3).

5. Remove the pin (Fig. 6–29, Item 4) and remove the plunger (Fig. 6–29, Item 5) from the shift fork (Fig. 6–29, Item 6).

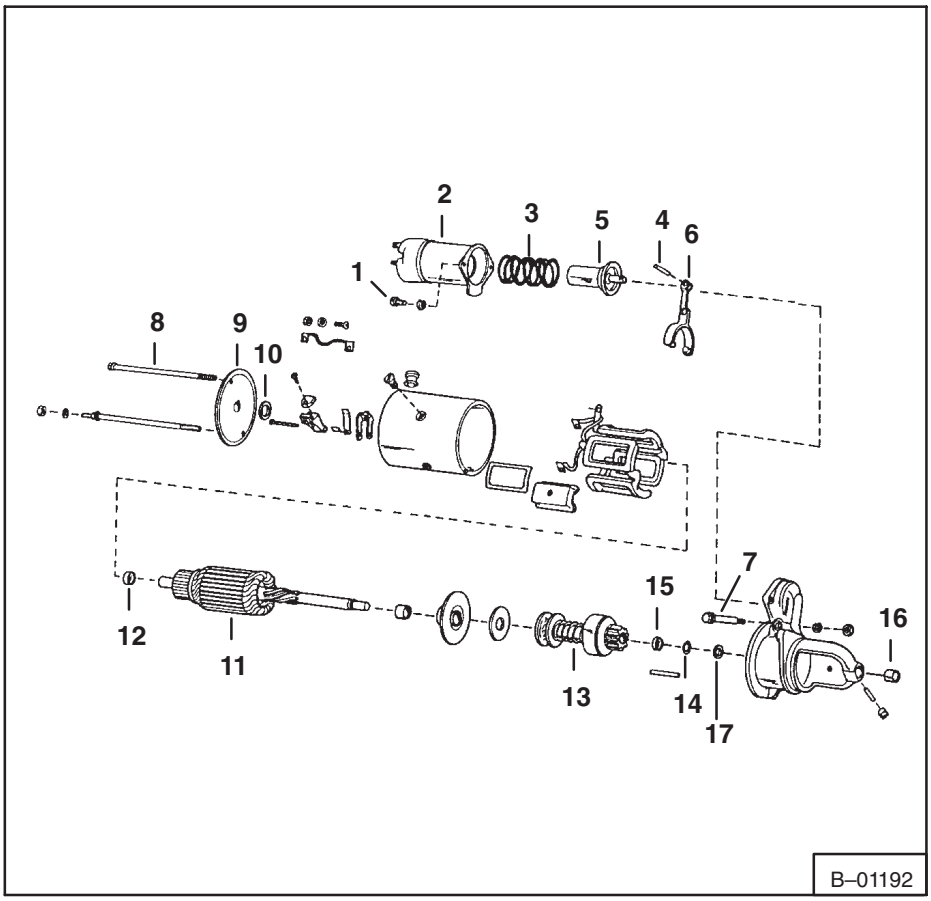

Fig. 6–29 Starter Assembly

NOTE: The plunger (Fig. 6–29, Item 5) must also be replaced if the solenoid (Fig. 6–29, Item 2) is replaced.

6. Remove the bolt (Fig. 6–29, Item 7) forthe shift fork pivot from the housing.

7. Remove the bolts (Fig. 6–29, Item 8) from the end cap (Fig. 6–29, Item 9).

8. Remove the shim washer (Fig. 6–29, Item 10) from the armature (Fig. 6–29, Item 11) shaft at the commutator end.

9. Remove the shift fork (Fig. 6–29, Item 6) from the drive end housing.

10. Remove the armature with the internal thrust washer (Fig. 6–29, Item 12) and the drive assembly (Fig. 6–29, Item 13), through the drive end of the starter frame.

11. Remove the thrust washer (Fig. 6–29, Item 12), from the commutator end of the armature shaft.

12. Remove the drive stop ring (Fig. 6–29, Item 14), thrust collar (Fig. 2–29, Item 15) and move the drive assembly off the armature shaft.

13. Use a brush and air pressure to clean the drive, the field coils, armature, the front plate and the rear housing.

14. Check the armature for broken or burned insulation and loose connections at the commutator.

15. Check the armature for broken and grounded circuits.

16. Check the armature shaft and bearings for damage and wear . If the commutator is rough, cut it in a lathe to make it smooth.

17. Check the brush holders for broken springs and for broken insulation.

18. Cut the two brush wires at the connection post. Use a file or hacksaw to make a groove in the top of the post deep enough to hold the new brush wires. Make sure the insulation is on the new brush wire. Solder the brush wires into the groove.

19. Cut the other brush wires about 0.250 inch (6,35 mm) from the joint of the field winding. Solder the new brush wire to the ends of the original brush wires. Make sure the insulation is over the solder connection.

20. Check the spring tension for the brushes.

21. Check the field coils for burns or broken insulation and electrical continuity. Check the field brush connections and the wire insulation.

22. Check the starter drive gear for tooth wear . The starter drive gear must engage more than 0.500 inch the depth of the ring gear teeth on the flywheel.

23. Put a small amount of grease on the splines of the armature (Fig. 6–29, Item 11). Install the drive assembly (Fig. 6–29, Item 13). Install the thrust collar (Fig. 6–29, Item 15) and the stop ring (Fig. 6–29, Item 14).

24. Install the thrust washer (Fig. 6–29, Item 12) on the commutator end of the armature.

25. Install the armature into the starter housing.

26. Install the brushes in the end plate (Fig. 6–29, Item 9) and install the end plate on the starter housing.

27. Put a small amount of grease in the bushing (Fig. 6–29, Item 16), and install the drive housing end.

28. Install the bolts (Fig. 6–29, Item 8) and tighten. Check the end play of the starter. If there is too much end play or not enough end play add or remove shims (Fig. 6–29, Item 17) at the drive end of the armature.

29. Install the shift fork (Fig. 6–29, Item 6) and the pivot bolt (Fig. 6–29, Item 7) and tighten.

30. Install the plunger (Fig. 6–29, Item 5) and the pin (Fig. 6–29, Item 4).

31. Install the spring (Fig. 6–29, Item 3) and install the solenoid (Fig. 6–29, Item 1) and tighten.

32. Connect the link between the solenoid and the starter.

ENGINE SERVICE

WARNING

Instructions are necessary before operating or servicing machine. Read Operation & Maintenance Manual, and signs (decals) on machine. Follow warnings and instructions in the manuals when making repairs, adjustments or servicing. Check for correct function after adjustments. repairs or service. Failure to follow instructions can cause injury or death.

W–2144–0189

ENGINE SERVICE (641)

WARNING

Instructions are necessary before operating or servicing machine. Read Operation & Maintenance Manual, and signs (decals) on machine. Follow warnings and instructions in the manuals when making repairs, adjustments or servicing. Check for correct function after adjustments. repairs or service. Failure to follow instructions can cause injury or death.

W–2144–0189

7A–1 TROUBLESHOOTING

PROBLEM	CAUSE	CORRECTION
Engine will not turn over with the starter.	Battery has lost its charge.	Charge the battery. Check the functions of the charging system.
	Loose battery connection.	Clean battery connections and cables. Tighten clamps.
	Loose starter connections.	Tighten the connections.
	Damaged starter switch.	Make replacement of the switch.
	Broken or disconnected wiring harness.	Connect or make replacement of wiring.
	Damaged starter or solenoid.	Repair as needed.
Engine does not start or is difficult to start.	Wrong starting procedure.	Refer to *Starting Procedure* in the Bobcat Operator's Manual.
	No fuel in the tank.	Add fuel. Remove air from the fuel system.
	Air cleaner is dirty.	Service the air cleaner.
	Fuel tank vent in cap has restriction.	Remove the cap and clean the vent.
	Fuel line has air leak or dirt or water	Correct as necessary.
	Damaged fuel lift pump.	Make replacement of pump if needed.
	Hydraulic/Hydrostatic load on engine.	Put all controls in neutral and warm oil reservoir during very low temperatures.
	Damage to fuel injection system.	Check and make repairs as needed.
	Excess fuel function not working.	Check solenoid and adjust.
	Crankcase oil is thick.	Use engine oil of correct viscosity (See Oil Specification Chart).
Engine does not run correctly (misses) or stops.	Fuel injection set wrong.	Check timing.
	Dirty fuel mixture, or restriction in fuel filter or vent.	Clean as necessary.
	Poor compression.	Check for loose cylinder head bolts.
	Water in the fuel.	Drain and replace fuel. Replace fuel filters.
Engine overheats.	Engine is overloaded.	Operate in low range. Operate at rated RPM.
	Engine cooling fins are dirty.	Remove covers and clean cooling fins.
	Engine has been operated with some of the covers removed.	Clean cooling fins and install the covers.
	Dirty engine oil.	Make replacement of engine oil.
	Exhaust system has restriction.	Correct as necessary.
	Injection timing is wrong.	Check injection timing.
Too much engine vibration.	Loose engine mounts.	Tight mount bolts to correct torque.
	Worn rubber mounts.	Replace rubber mounts.

7A–2 FUEL SYSTEM

7A–2.1 Fuel System Service

1. Engage the parking brake and start the engine. Push the throttle forward until it is against the stop. If it is not against the stop remove and adjust the clevis (Fig. 7A–1). High idle must be 2625–2675 RPM. If not correct, turn the adjustment screw.

2. Adjust the clevis (Fig. 7A–1) so when the solenoid is in full down position the fuel button is fully engaged. The clearance between the top of the button and button guide collar must be 0.0312 inch (0,79 mm).

3. Check adjustment by pushing down on the solenoid rod. The lever must not hit the collar around the fuel excess button.

4. If the lever hits the rod must be adjusted until there is a small gap of 0.0312 inch (0,79 mm) (Fig. 7A–2).

NOTE: It is important that the linkage is adjusted so the plunger in the solenoid is in a full down position when engaged. If it is not, there will be damage to the solenoid.

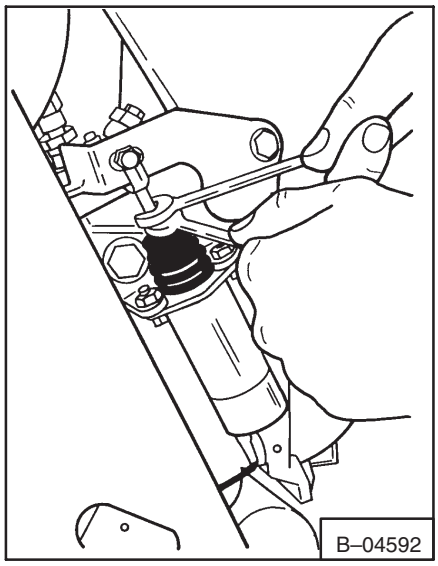

Fig. 7A–1 Adjusting Fuel Solenoid

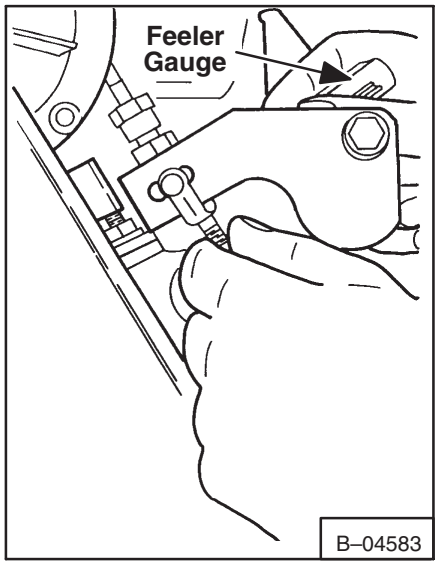

Fig. 7A–2 Slotted Plug

7A–2.2 Venting Air From The Fuel System

Air must be vented from the fuel system after the following conditions.

1. Replacement of fuel filters.
2. Replacement of fuel system parts.
3. The machine has run out of fuel.
4. The fuel line has been replaced or repaired.
5. Removing water from the water trap.

To vent air from the fuel system (Fig. 7A–3):

1. Fill the tank with clean approved fuel.
2. Check the in–line filter and fuel line for dirtBoth must be clean and must not have any restrictions.
3. Loosen the slotted plug (Fig. 7A–3, Item 1).
4. Move priming lever (Fig. 7A–4, Item 1) until you cannot see air coming from the slotted plug (Fig. 7A–3, Item 1). Tighten the fitting.

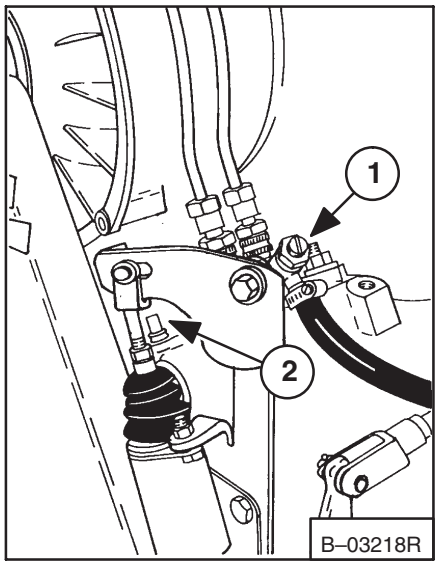

Fig. 7A–3 Slotted Plug

5. Loosen the injector fittings (Fig. 7A–5).

6. Turn the engine with the starter until fuel comes from the loose fittings.

7. Tighten the fittings.

NOTE: DO NOT overtighten the fittings.

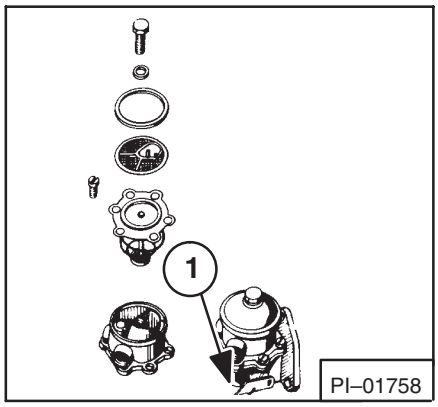

Fig. 7A–4 Fuel Pump

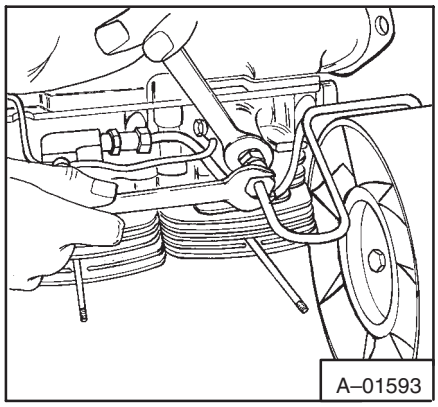

Fig. 7A–5 Loosening Injector Lines

7A–2.3 Fuel Filters

There are two fuel filters used in the fuel system.

1. Fuel pump strainer (Fig. 7A–4).

   To clean the fuel pump strainer remove the cover on the top of the pump. The strainer and gasket can be lifted out and cleaned with compressed air.

IMPORTANT

Keep the fuel system clean.

I–2128–0697

2. Filter element (Fig. 7A–6).

   To install a new cartridge, loosen the bolt (Fig. 7A–6, Item 1). Remove the filter (Fig. 7A–7), and install the new filter.

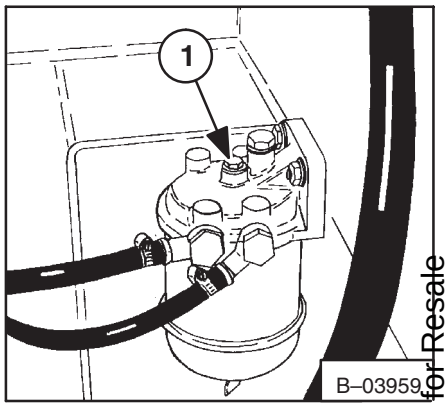

Fig. 7A–6 Fuel Filter

NOTE: When the filters are removed or if the engine runs out of fuel, air enters the fuel system and venting of the fuel system is necessary.

7A–2.4 Fuel Water Trap

Water is removed from the fuel system by a water trap on the bottom of the fuel filter. The water is removed by turning out the screw at the bottom of the sediment bowl (Fig. 7A–8). Install the screw after the water has been removed.

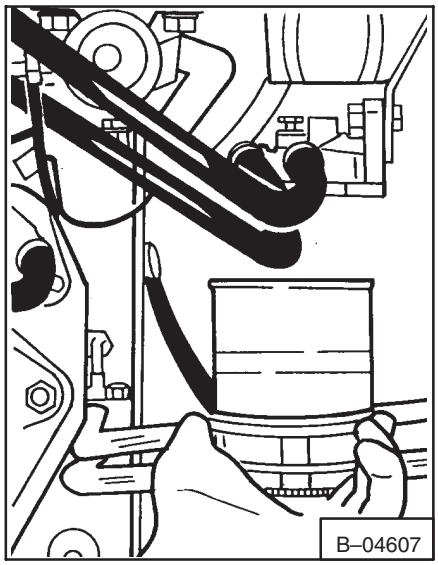

Fig. 7A–7 Removing Fuel Filter

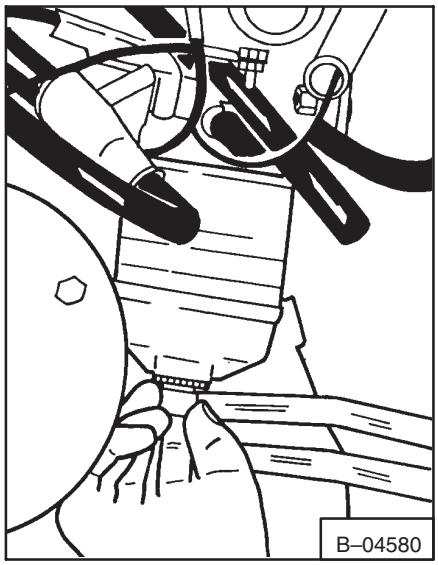

Fig. 7A–8 Removing Water From Bowl

7A–2.5 Fuel Lift Pump

A repair kit is available for repair of the lift pump. If the pump does not give enough pressure or it leaks, install the repair kit or make replacement (See Section 8 for the correct pressure by turning the engine over with the starter).

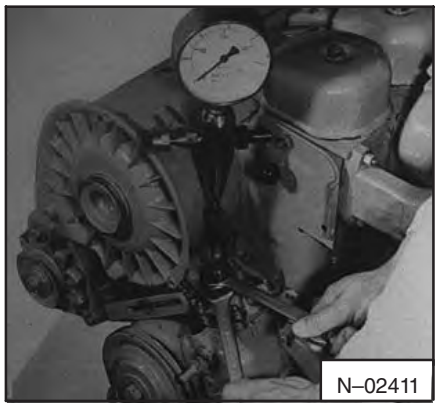

Fig. 7A–9 Pressure Indicator Tool

7A–2.6 Fuel Injection Pump

To check delivery valves and pump elements:

1. Remove the fuel injection lines from the injection pump.
2. Install the pressure indicator tool loosely to one of the open connections (Fig. 7A–9). Turn the engine over several revolutions to remove air and then tighten the nut.
3. Open the throttle.
4. Turn the engine with the starter until the pressure on the gauge is at least 1074 PSI (7909 kPa). Wait for one minute. The decrease in pressure must not be more than 145 PSI (1000 kPa) on the delivery valve.
5. Turn the engine five revolutions. The pressure shown on the gauge must be at least 4347 PSI (300 bar).

If either of the two pressures are low the pump is damaged.

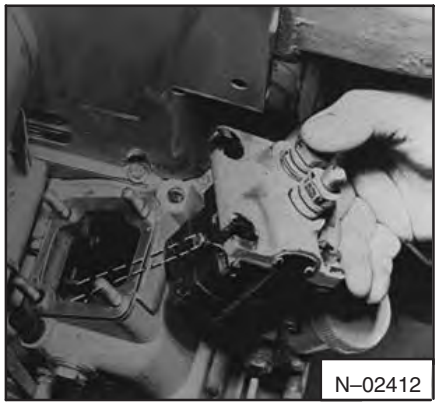

Fig. 7A–10 Removing Injector Pump

7A–2.7 Removal Of The Injection Pump

NOTE: The excess fuel button (Fig. 7A–3, Item 2) must not be engaged.

1. Disconnect the fuel injection lines and the fuel lift pump. Remove the four nuts and remove the pump (Fig. 7A–10). Note the number of shims used under the pump.

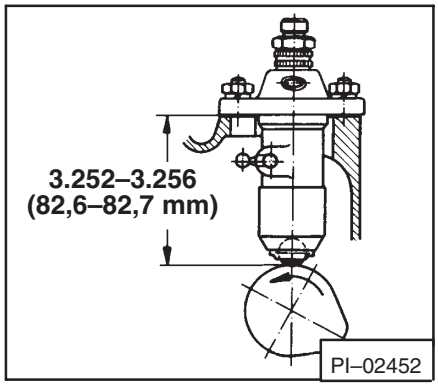

Fig. 7A–11 Distance Of Camshaft To Gasket

7A–2.8 Injection Pump Service

The injection pump must be replaced as a unit if it is damaged or worn.

7A–2.9 Installing The Injection Pump

1. Put a new gasket on the pump fastening surface.
2. Turn the camshaft so the cam lobes cannot be seen.
3. Measure the distance from the top of the gasket to the camshaft (Fig. 7A–11). Add shims on the top of the gasket until the distance is 3.252–3.256 (82,6–82,7 mm) (Fig. 7A–12).

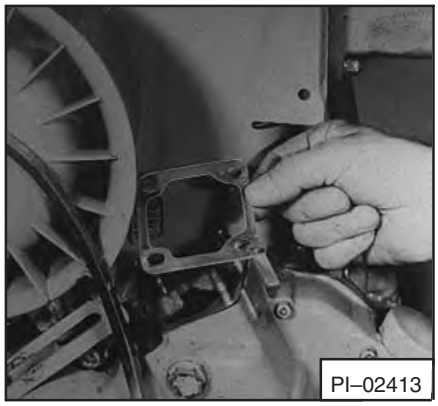

Fig. 7A–12 Adding And Removing shims

4. Move the rack of the injection pump lever with the recess in the engine housing (Fig. 7A–13).

5. Align the ball on the pump rack (Fig. 7A–14).

6. Install the injection pump and connect the fuel line using new gaskets on both sides of the banjo fitting.

Fig. 7A–13 Moving The Rack

Fig. 7A–14 Aligning The Fork

Use this procedure to find top dead center (TDC):

(a) Check the valve clearance and correct as needed. Clearance must be 0.006 inch (9,15 mm) cold, both intake and exhaust valves.

(b) Turn the pulley counterclockwise by hand so that the piston closest to the pulley, #2 cylinder, is at the point of maximum compression (TDC).

(c) Turn the pulley clockwise 45°. Push down one of the valves on the #2 cylinder (closest to the pulley) with a screwdriver. Put a piece of 0.250 inch (5,6 mm) spacer between the valve stem and the rocker arm (Fig. 7A–15).

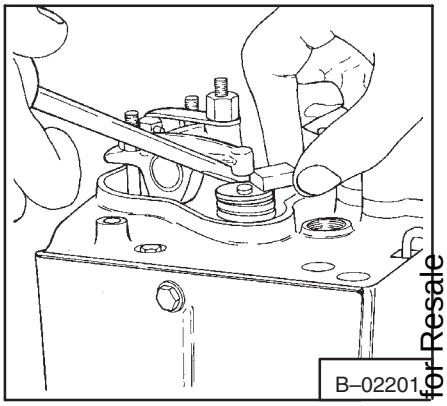

Fig. 7A–15 Finding TDC

IMPORTANT

Turn the pulley by hand at a slow rate. Be careful not to damage the valve or the piston.

I–2129–0697

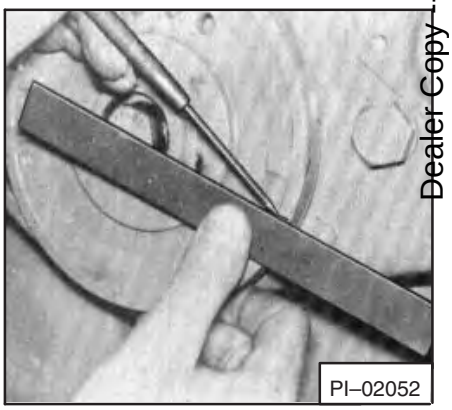

Fig. 7A–16 Marking Pulley

(e) Put a mark on the pulley in line with the mark on the engine cover (Fig. 7A–16). Turn the pulley clockwise about 45° and remove the spacer.

(f) Turn the front pulley past TDC 90° counterclockwise. Put the 0.250inch (5,5 mm) spacer in between the same valve stem and rocker Carefully turn the pulley by hand, clockwise until the piston again hits the valve. Put a mark at this position (Fig. 7A–16). Turn the pulley counterclockwise 45° and remove the spacer.

(g) Install the cylinder head valve covers.

(h) Use a steel flexible rule to mark and measure the half–way position between the two marks (Fig. 7A–17). This is TDC, top dead center.

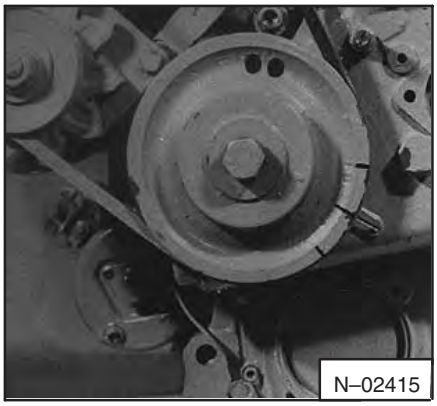

Fig. 7A–17 Marking Half–Way Position

NOTE: When the center mark on the pulley is in line with the mark on the housing, #2 cylinder is TDC.

IMPORTANT

The excess fuel button must be in the UP position.

I–2130–0697

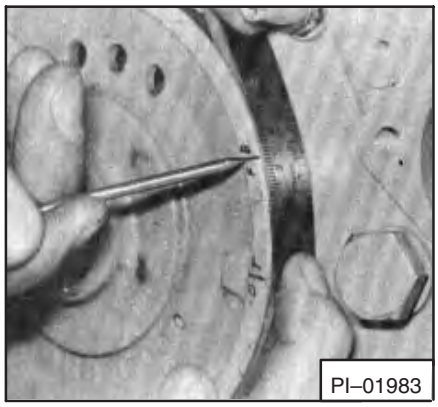

Fig. 7A–18 Marking Start Of Injection

7. Make a mark 22 ° before TDC. This mark is 1.126 inches (28,6 mm) counterclockwise of the TDC mark (Fig. 7A–18).

8. Install the capillary tube (tool P/N 003–1085) in the injection pump fitting for the #2 cylinder (Fig. 7A–19).

NOTE: If the capillary tube is not available the clear plastic cartridge from a ball point pen can be installed in the hole of the pump connection.

9. Vent the air from the fuel system by turning the engine several revolutions with the starter until there is no air coming up with the fuel.

10. Turn the engine by hand in the direction of normal rotation at a slow rate until fuel begins to show in the clear tube. When this happens the 22° mark on the housing (Fig. 7A–20) must be aligned with the pointer . If it is not in alignment, loosen the injection pump and move it in or out for adjustment of the injection timing (Fig. 7A–21).

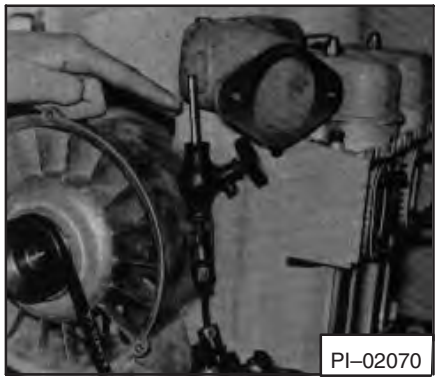

Fig. 7A–19 Removing Air From Fuel System

Direction *A* – Advanced Timing

Direction *B* – Retarded Timing

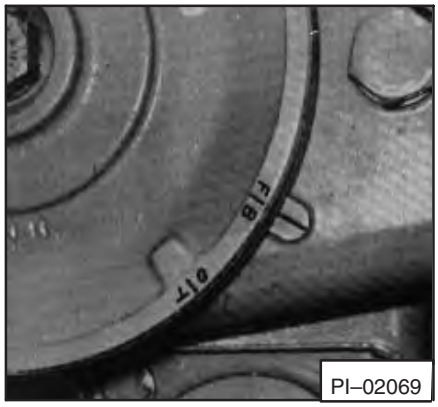

Fig. 7A–20 Aligning With Start Of Injection

7A–2.10 Checking Adjustment Of Fuel Delivery

1. Engage the parking brake.

2. Start the engine and run at full throttle.

3. Push the levers forward at a slow rate until the engine begins to stall. There must be very little black smoke coming from the muffler.

IMPORTANT

Wrong adjustment of the fuel delivery will shorten the life of the engine. At high altitudes, the engine will have a rich mixture if the fuel delivery adjustment is not correct. This will damage the engine.

I–2143–1297

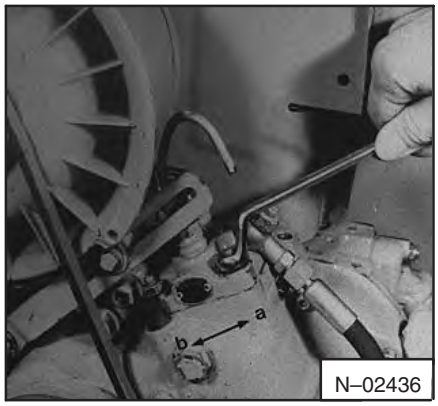

Fig. 7A–21 Adjusting Timing

4. If fuel adjustment is not correct at high altitudes (excessive black smoke) put the levers in neutral position. Remove the cap and copper washer from the fuel adjustment screw (Fig. 7A–22). Turn the screw in or out until there is a small amount of black smoke coming from the muffler. Tighten the lock nut on the screws.

5. Install the washer and the cap.

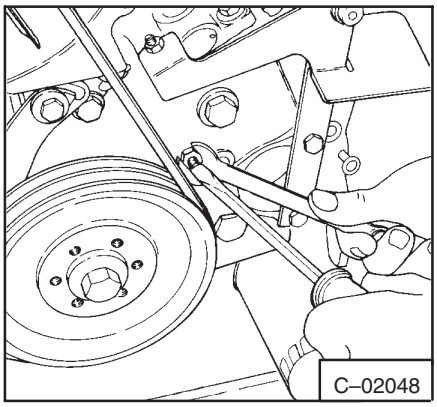

Fig. 7A–22 Fuel Adjustment Screw

7A–3 FUEL INJECTION NOZZLES

7A–3.1 Removal

1. Disconnect the fuel lines.

2. Remove the nut that holds the yoke in position and remove the yoke (Fig. 7A–23).

3. Pull out the nozzle. A nozzle puller can be used if necessary (P/N 003–0463 extractor and 003–0536 slide hammer) (Fig. 7A–24).

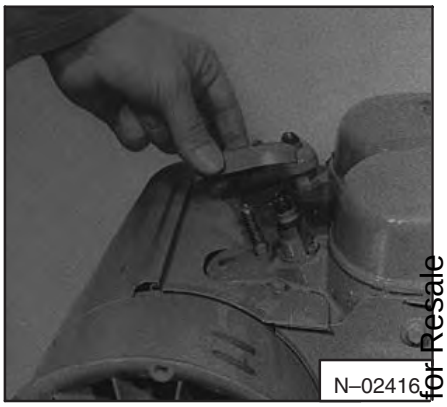

Fig. 7A–23 Removing The Yoke

7A–3.2 Disassembly And Repair Of Injector (In The Shop)

Special equipment is needed for service of injection nozzles. Disassembly instructions are given only for cleaning and inspection.

1. Clamp the body of the injector valve in a vise. Remove the lower parts (Fig. 7A–25) and remove the internal parts very carefully . Wash them in clean diesel fuel.

2. Use a stiff bristle brush (brass) to clean the injector tips.

IMPORTANT

DO NOT use a steel brush to clean the injector tips.

I–2132–0697

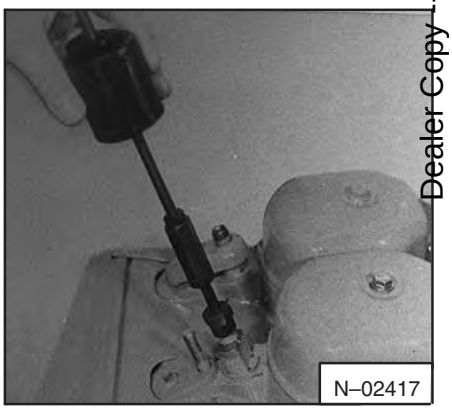

Fig. 7A–24 Removing The Injector

3. Check the needle valve and needle valve seat for wear and dirt. Replace if either is damaged.

4. Assemble the injector. Check the release pressure and spray pattern with an injector tester (See Paragraph 8A–2.1, Page 8A–3 for specifications).

7A–3.3 Installation Of The Injector

NOTE: A new sealing gasket MUST be installed each time an injector is replaced.

Installation is the reverse of removal.

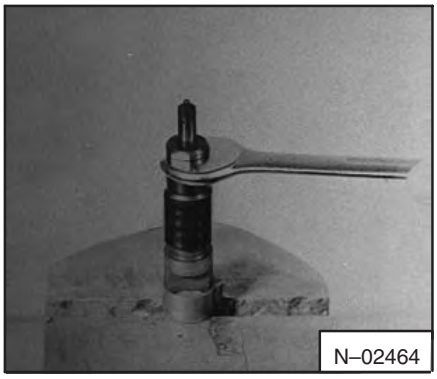

Fig. 7A–25 Disassembly Of Injection Nozzle

7A–4 BLOWER FAN

7A–4.1 Removal Of The Blower Fan

IMPORTANT

Be careful not to damage the fan blades

I–2133–0697

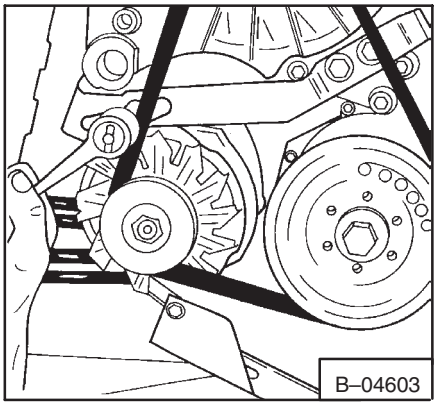

Fig. 7A–26 Removing Alternator Bolt

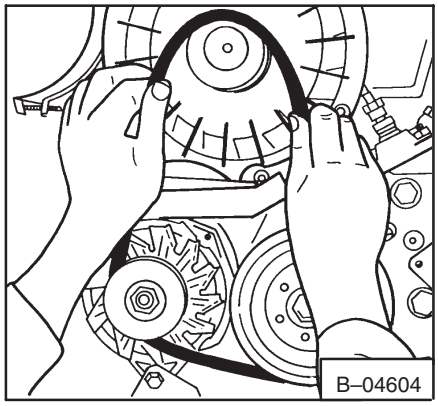

Fig. 7A–27 Removing V–Belts

1. Remove the belt shield and loosen the alternator (Fig. 7A–26) to remove the v–belts (Fig. 7A–27).

2. Remove the alternator bracket and the three bolts that hold the blower in position (Fig. 7A–28). Lift the blower assembly of f the engine.

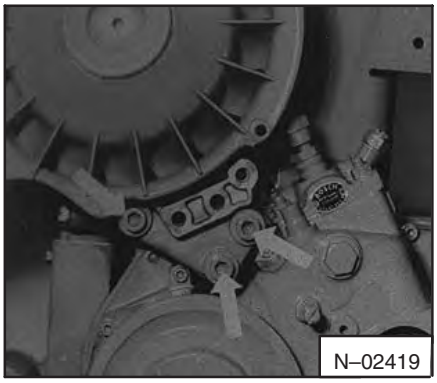

Fig. 7A–28 Removing Blower Housing Bolts

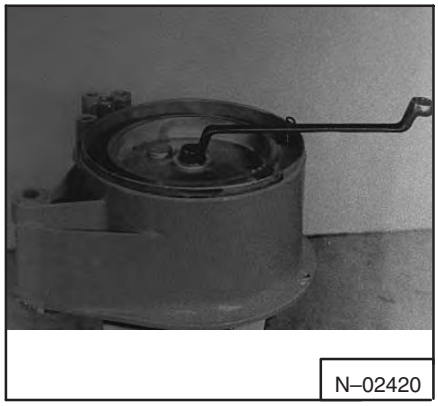

Fig. 7A–29 Removing The Fan Bolt

7A–4.2 Disassembly Of The Blower Fan

1. Clamp the pulley of the cooling fan in a vise with protective aluminum jaws and remove the center bolt (Fig. 7A–29).

2. Remove the blower fan (Fig. 7A–30).

3. Remove the drive shaft from the fan housing using a drift punch made of soft metal.

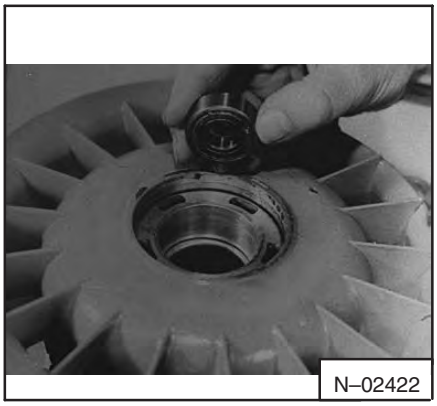

Fig. 7A–30 Removing The Blower Fan

Fig. 7A–31 Removing The Snap Ring

4. Remove the ball bearing from the drive shaft using a bearing puller.

5. Remove the snap ring (Fig. 7A–31) from the ball bearing in the housing. Remove the ball bearing using a drift punch made of soft metal (Fig. 7A–32).

7A–4.3 Assembly Of The Blower Fan

1. Fill the new bearing with high temperature bearing grease.

2. Press the small bearing into the fan housing with the closed side down.

3. Install the snap ring to hold the bearing in position.

Fig. 7A–32 Removing The Bearing

4. Press the large ball bearing over the drive shaft with the closed side toward the v–belt pulley.

5. Press the fan shaft with the bearing installed into the housing.

6. Put the cooling fan in a vice. Clamp the cooling fan by the pulley.

7. Position the rotor wheel and tighten the bolt to the correct torque as specified in Section 8 of Deutz Technical Data.

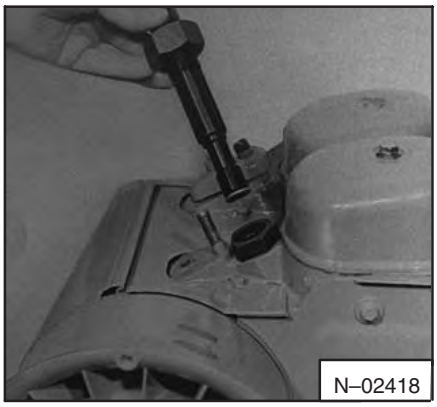

Fig. 7A–33 Checking Compression

7A–4.4 Installation Of The Blower Fan

Installation is the reverse of removal.

Fig. 7A–34 Installing Shims

7A–5 ENGINE SERVICE

1. All specifications are given in Section 8 *DEUTZ TECHNICAL DATA*.

2. To check compression install compression tester in the injector opening (Fig. 7A–33). Turn the engine four revolutions or until highest reading is obtained. Compression must be 340–413 PSI (23,5 – 28,5 bar).

3. Install new bearing in the air blower each time the engine is overhauled.

4. Special bolts are used in many locations of the engine. These bolts are first tightened to 22 ft.–lbs. (30 Nm) torque. Then tighten them in steps to correct torque. (See Section 8 *DEUTZ TECHNICAL DATA).*

5. When overhauling an engine always install new gaskets, O–rings and seals.

6. Install the correct number of shims on each cylinder during assembly (Fig. 7A–34).

NOTE: Check the piston clearance to determine the number of shims.

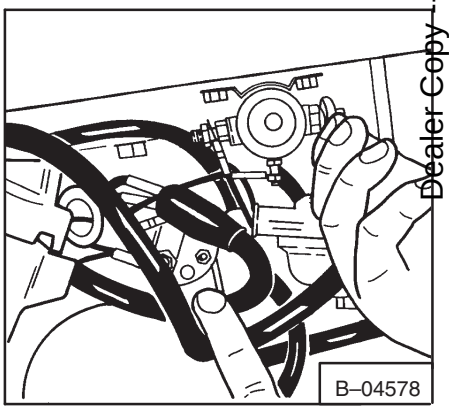

Fig. 7A–35 Disconnecting Solenoid Wires

7A–6 ENGINE REMOVAL

To remove the engine from the Bobcat loader:

1. Disconnect the negative battery cable. Then disconnect the positive battery cable (The negative battery cable must be removed first).

2. Disconnect the ground wire from the frame.

3. Disconnect the wires from the solenoid (Fig. 7A–35).

4. Remove the grill (Fig. 7A–36).

5. Release the tie clamp holding the fuel line to the shield (Fig. 7A–37).

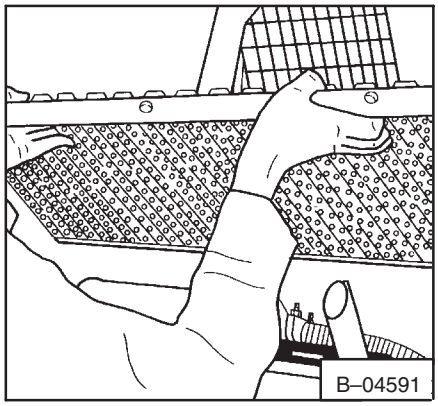

Fig. 7A–36 Removing Grill

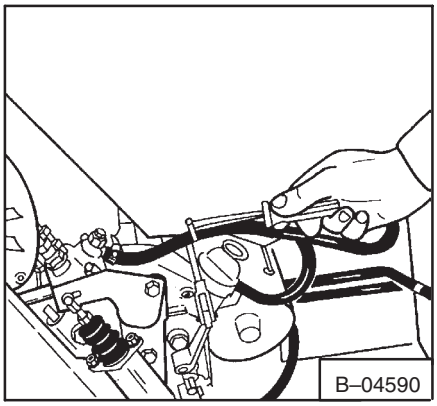

Fig. 7A–37 Releasing Tie

6. Remove the bolts holding the engine shield in position (Fig. 7A–38, 7A–39).

7. Remove the engine shield (Fig. 7A–40).

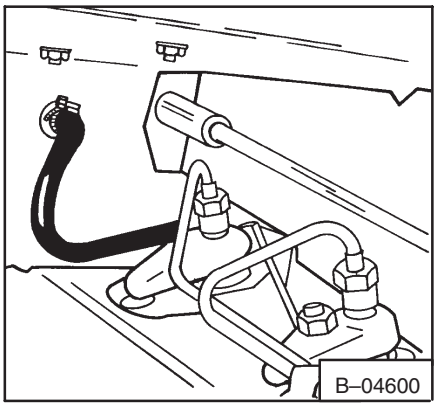

Fig. 7A–38 Removing Engine Shield Bolts

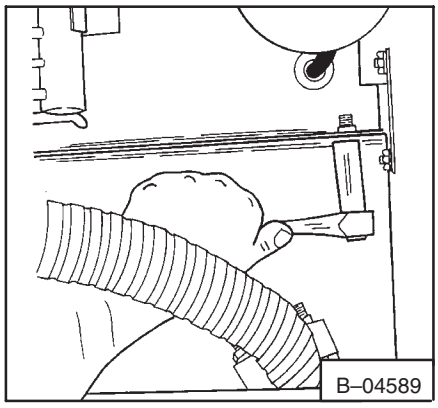

Fig. 7A–39 Removing Engine Shield Bolts

8. Disconnect the exhaust pipe (Fig. 7A–41).

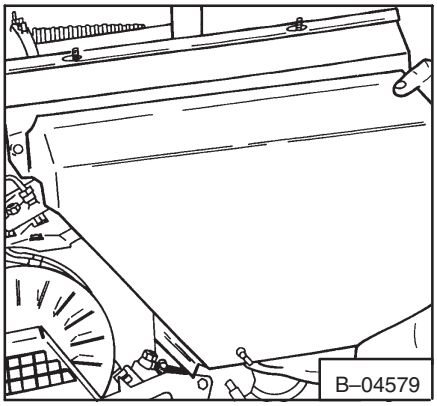

Fig. 7A–40 Removing Engine Shield

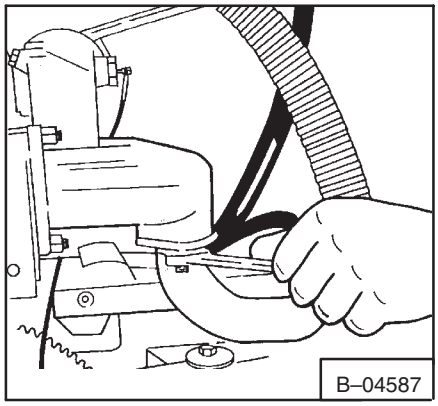

Fig. 7A–41 Disconnecting Exhaust Pipe

9. Remove the throttle linkage bolt (Fig. 7A–42).

10. Remove the cotter pin from the throttle pin (Fig. 7A–43).

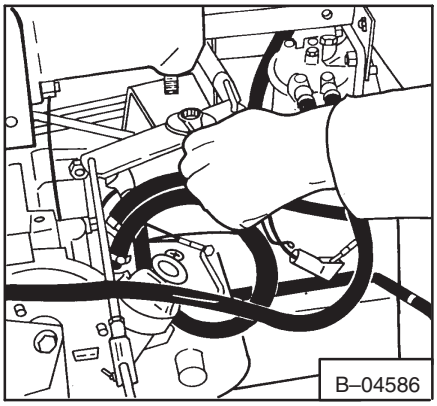

Fig. 7A–42 Removing Throttle Bolt

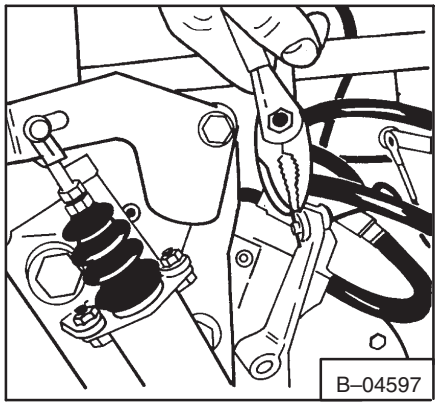

Fig. 7A–43 Removing Cotter Pin

11. Remove the throttle pin (Fig. 7A–44).

12. Remove the throttle linkage (Fig. 7A–45).

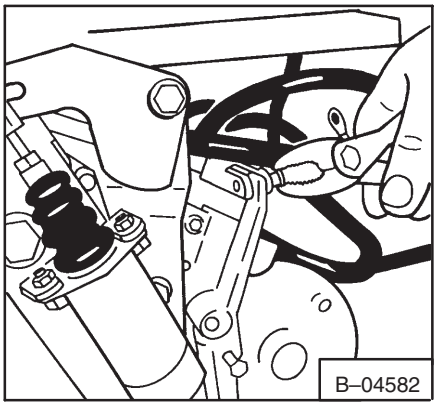

Fig. 7A–44 Removing Throttle Pin

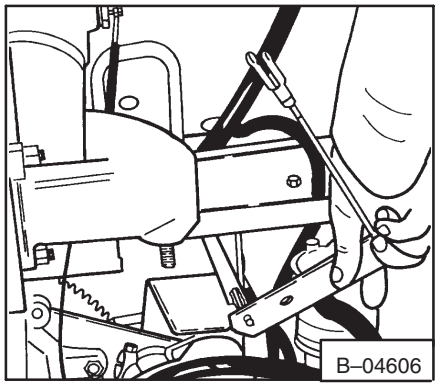

Fig. 7A–45 Removing The Throttle Linkage

13. Disconnect the air cleaner hose (Fig. 7A–46).

14. Shut the fuel off at the fuel tank and disconnect the return fuel line (Fig. 7A–47).

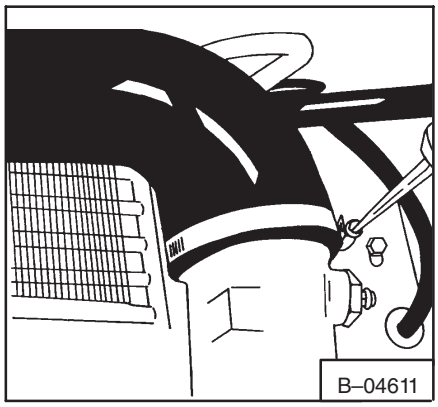

Fig. 7A–46 Removing Air Cleaner

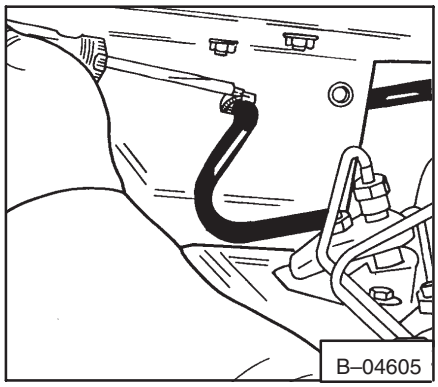

Fig. 7A–47 Disconnecting Return Fuel Line

15. Disconnect the inlet fuel line (Fig. 7A–48).

16. Remove the fuel filter head assembly (Fig. 7A–49).

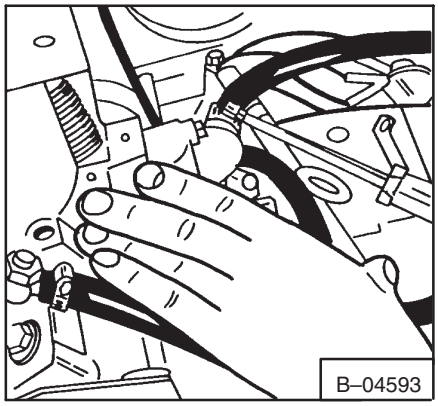

Fig. 7A–48 Disconnecting Inlet Fuel Line

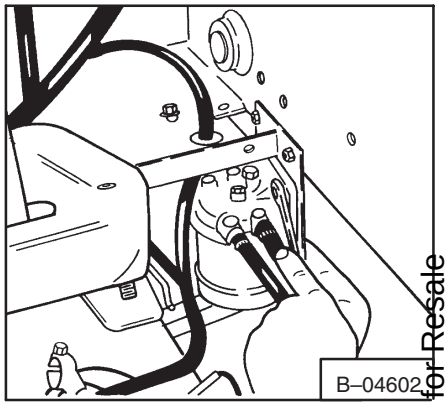

Fig. 7A–49 Removing Filter Head

17. Remove the bracket holding the engine harness connector and move the bracket and connector into the engine compartment (Fig. 7A–50).

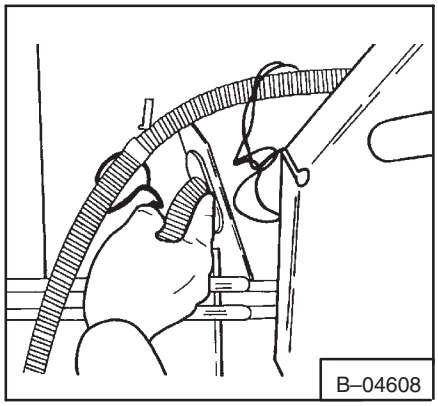

Fig. 7A–50 Moving Electrical Connector

18. Put jackstands under the Bobcat frame. Remove the four bolts holding the engine mounts on the engine plate (Fig. 7A–51).

19. Remove the engine from the machine by lifting up a small amount on the engine and pulling the engine out carefully (Fig. 7A–52).

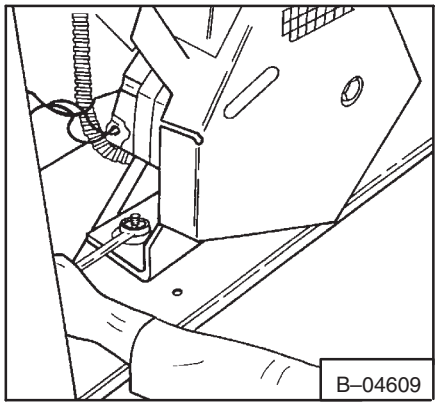

Fig. 7A–51 Removing Mount Bolts

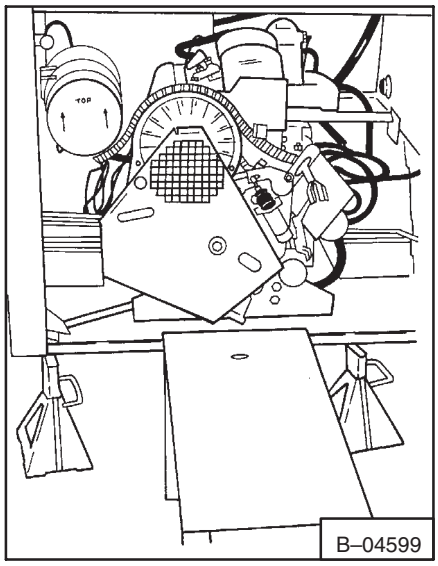

Fig. 7A–52 Removing Engine

7A–7 CYLINDER HEAD AND VALVES

7A–7.1 Removal And Disassembly

1. Remove the blower and air housing.

2. Remove the valve covers and the rocker arm brackets (Fig. 7A–53).

3. Remove the plugs and push rods (Fig. 7A–54).

4. Remove the four bolts that hold the head in position with a socket wrench. Loosen the bolts evenly.

5. Lift the cylinder head of f the engine and remove the push rod cover tubes.

6. Use a valve spring compressor to remove the valves and springs (Fig. 7A–55).

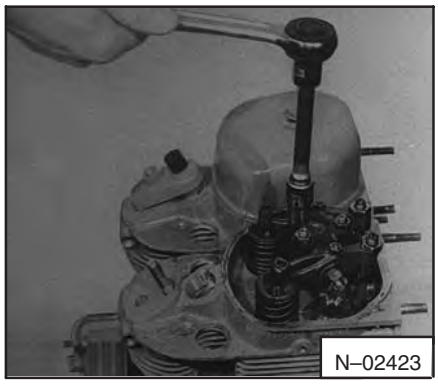

Fig. 7A–53 Removing Rocker Arm Bracket

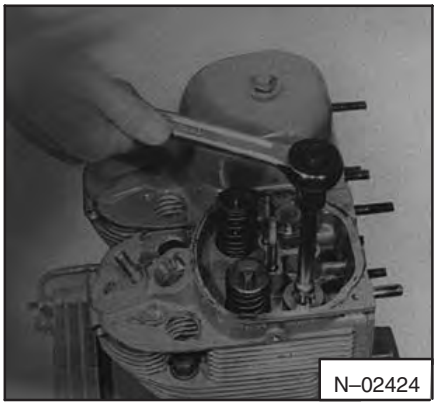

Fig. 7A–54 Removing The Plugs

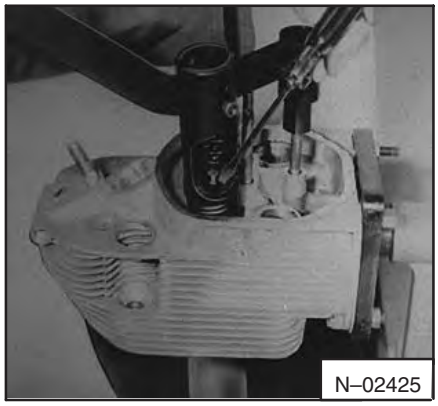

Fig. 7A–55 Removing The Valve Springs

7A–7.2 Repair And Assembly

1. Check the head seating surface for damage (Fig. 7A–56). Light scratches can be removed by grinding the head and the cylinder with fine grinding compound (Special tool P/N 003–0426 available from your local Deutz dealer) is used when there is more damage.

2. Grind the old valves if you are going to use them again. Install the valve and measure the distance to the head. If the valve depth is over the maximum the valve seat will need to be replaced (Fig. 7A–57). Use valve seat removal tool kit P/N 003–3409).

   (a) Heat the cylinder head to 450°F. (250°C.) in an oven.

   (b) Remove the head from the oven using asbestos gloves. Put the head on its side while holding with asbestos gloves and tap out the valve guides from the bottom (Piston side) with a punch (Fig. 7A–58).

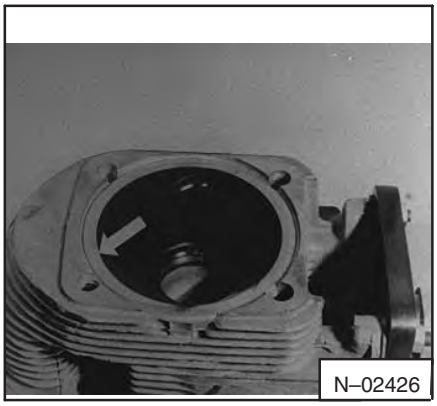

Fig. 7A–56 Checking The Surface

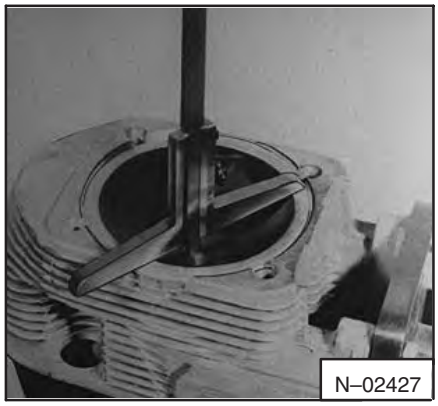

Fig. 7A–57 Checking Valve Depth

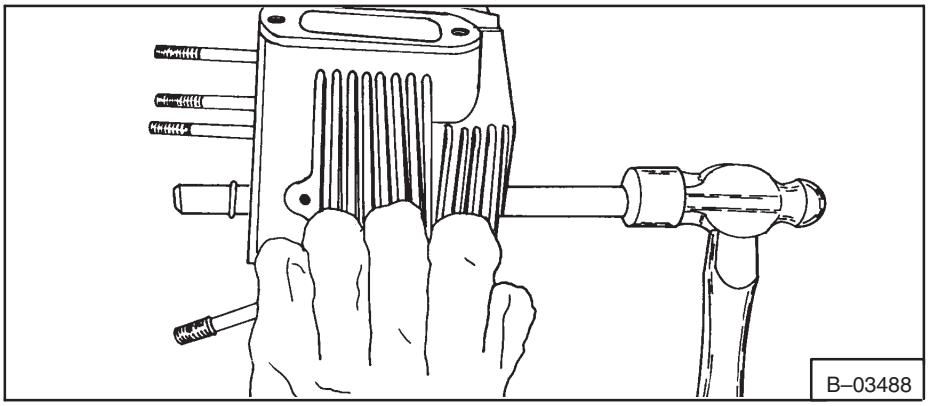

Fig. 7A–58 Removing The Valve Guides

(c) Install valve seat removal tool into the valve seat (Fig. 7A–59).

(d) Put the punch through the bore of the valve guide onto the removal tool. Then remove the valve seat (Fig. 7A–60).

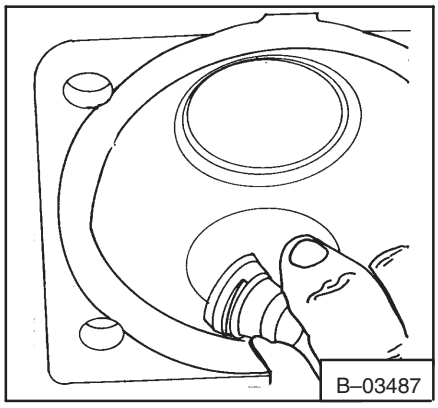

Fig. 7A–59 Valve Seat

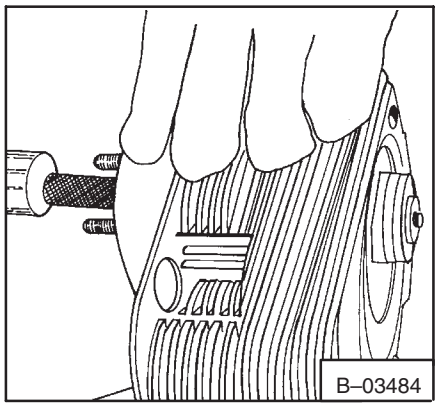

Fig. 7A–60 Removing Valve Seat

(e) Check the cylinder head temperature. It must be 450°F. (250°C.). Using a punch install new guides (Fig. 7A–61).

NOTE: The snap ring on the guide must contact the head to be installed correctly.

(f) Install a new valve seat (Fig. 7A–62) into the bore and tap into position using the special tool from the kit (P/N 003–3409 available from your local Deutz dealer).

NOTE: Never use too much force when installing valve guides and valve seats. The cylinder head must be heated to the correct temperature and there must not be any debris (burrs).

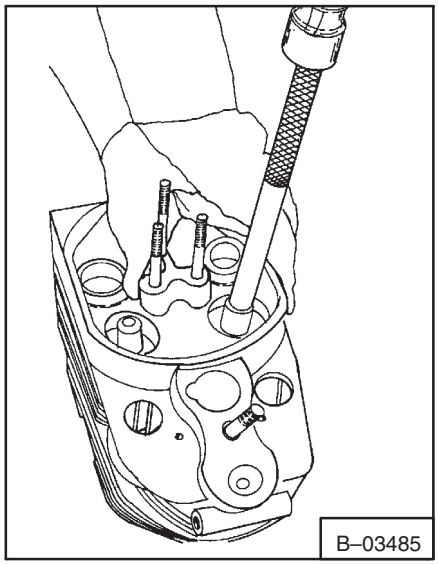

Fig. 7A–61 Installing New Guide

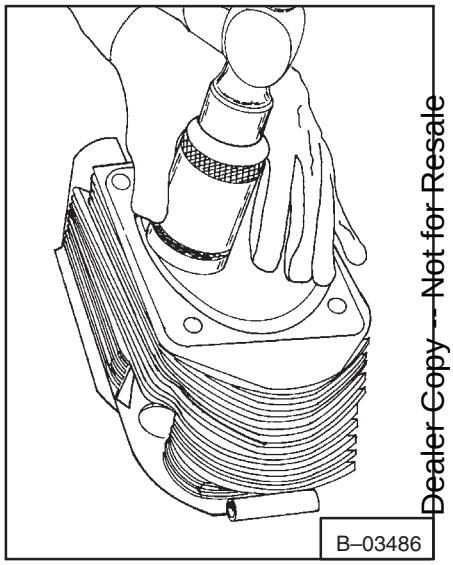

Fig. 7A–62 Installing New Seat

3. Measure the valve springs for correct length (Fig. 7A–63) (See Paragraph 8A–2.3, Page 8A–3 for correct length).

4. Apply lubricant (oil) to the valve stems and install the valve stems. Install the spring caps (Fig. 7A–64), springs and retainer with a spring compressor.

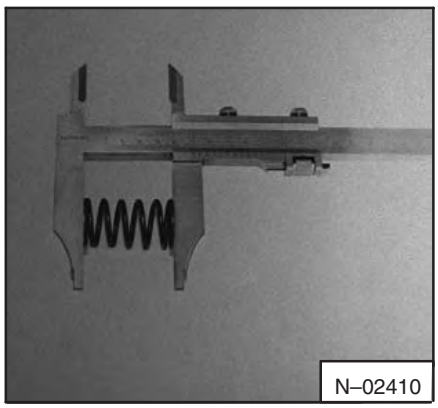

Fig. 7A–63 Measuring Valve Springs

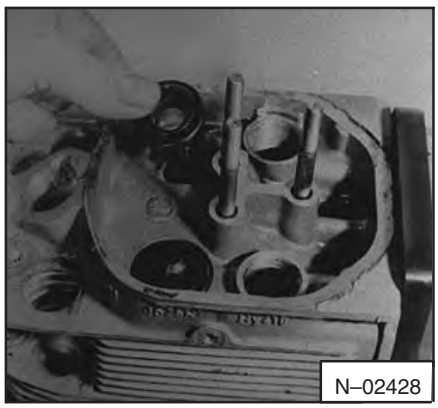

Fig. 7A–64 Installing Spring Caps

5. Remove the rocker arms from the bracket to check them for wear (Fig. 7A–65). Install new bushings if needed.

NOTE: The oil holes must be aligned.

7A–7.3 Checking Piston Crown Clearance And Installation Of Cylinder Head

1. Position lead wire or solder, approximate diameter 0.060 inch, across the piston as shown in figure 7A–66.

IMPORTANT

Use grease to hold the solder in position. The piston must be below TDC.

I–2134–0697

2. Put the cylinder head on the engine cylinder and install the cylinder head bolts with the washers.

   (a) Pre–load bolts to 22 ft.–lbs. (30 Nm) torque. See tightening procedure and tighten all the head bolts through the first step with a degree scale tool (P/N 003–0500 available from your local Deutz dealer). Turn the engine one complete revolution (360°).

   (b) Remove the cylinder head bolts and the cylinder head. Mark the cylinder heads to the cylinders.

   (c) Remove the lead wire and measure the thinnest points. If clearance is not correct add or remove shims between cylinder and crankcase (See Piston Crown Clearance Page 8A–4).

NOTE: When installing head use this method to get correct clearance.

If there is not enough clearance remove the cylinder and put the needed number of shims below the liner.

If there is too much clearance raise the cylinder and remove the correct number of shims.

Use one thick shim instead of several thin ones.

3. Before installing the cylinder heads measure the cylinder head bolts for correct length (See Engine Specifications).

4. Hold a straight edge across the top of the heads as shown in figure 7A–67. Move the cylinder heads until the two cylinder heads are in alignment.

5. Tighten the head bolts. Special tool (P/N 003–0400 available from your local Deutz dealer) must be used to get the correct angle for tightening (Fig. 7A–68). (See Torque specifications, Section 8–1.18).

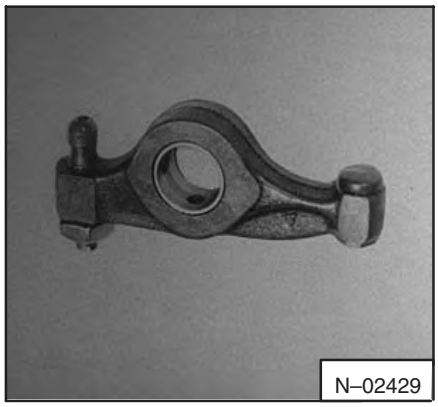

Fig. 7A–65 Checking Bushings

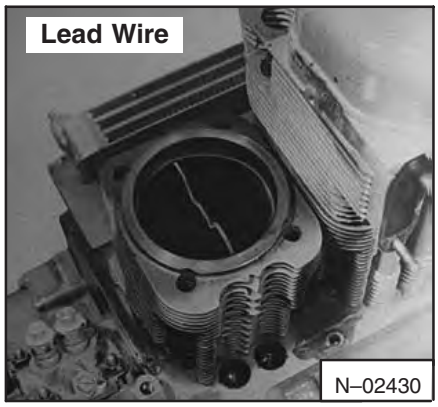

Fig. 7A–66 Checking Clearance

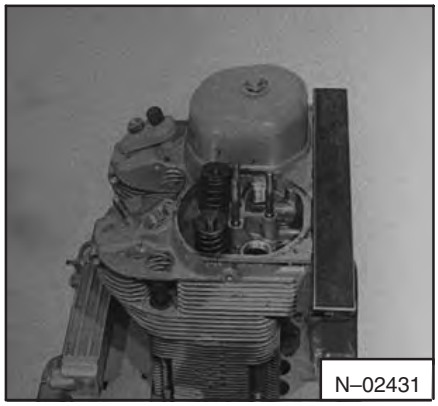

Fig. 7A–67 Checking Alignment Of Heads

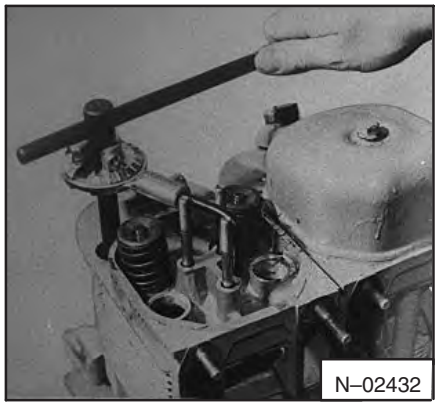

Fig. 7A–68 Tightening Head Bolts

6. Install the spring on the push rod tube by using special tool (P/N003–0501 available from your local Deutz dealer) (Fig. 7A–69).

7. Put the washer and seal on the bottom of the push rod tube and the seal at the top (Fig. 7A–70).

8. Install the push rod tubes as shown in (Fig. 7A–71).

9. Install the push rods and the rocker arm bracket. Make adjustment of the rocker arms as needed (Fig. 7A–72).

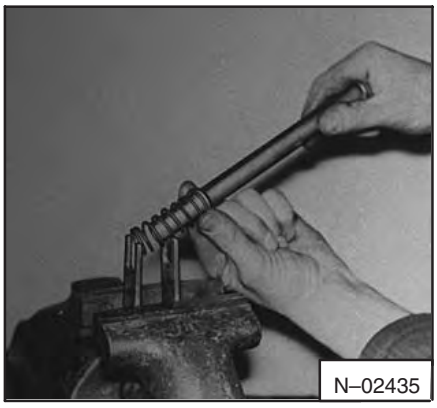

Fig. 7A–69 Installing Spring

10. The rocker arms have an oil metering screw (Fig. 7A–73). One thread must be showing over the top of the nut. Check to see that there is a small amount of oil flow toward the thrust pad.

11. Install all other parts removed during removal of the cylinder head.

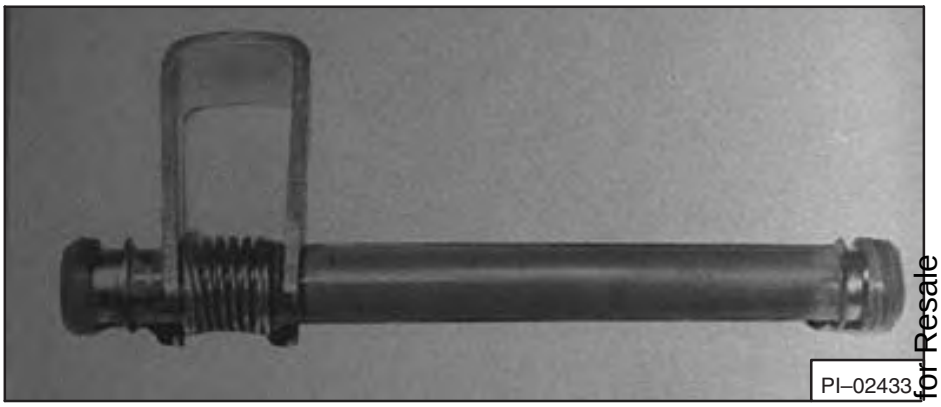

Fig. 7A–70 Installing Washer

7A–8 CYLINDER, PIST ONS AND CONNECTING RODS

NOTE: Cylinders may be removed with the piston and connecting rod in position. It is best to remove and install the piston rod and cylinder together to prevent damage to parts.

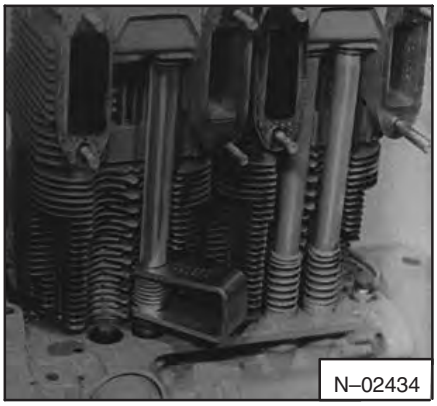

Fig. 7A–71 Installing Push Rod Tubes

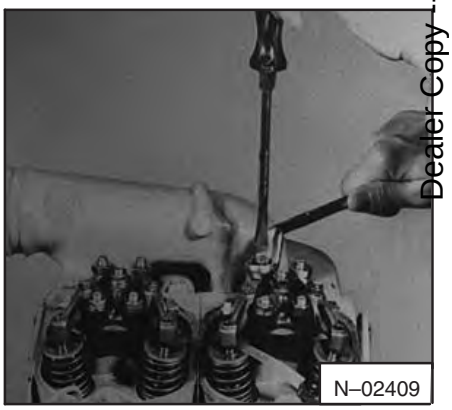

Fig. 7A–72 Adjusting Rocker Arms

1. Remove the cylinder head.

2. Remove the oil pan. Remove the bolts that hold the cap to the connecting rod. Mark the bearings to the correct connecting rod if they are to be used again (Fig. 7A–74).

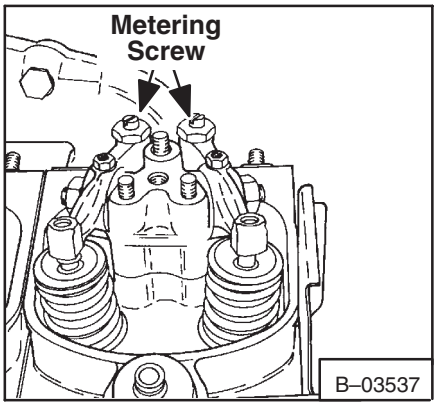

Fig. 7A–73 Oil Metering Screw

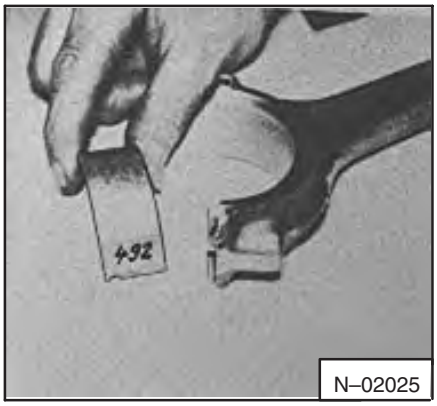

Fig. 7A–74 Marking Bearings

3. Lift out the cylinder, piston and rod together (Fig. 7A–75). Note the number of shims under the cylinder.

4. Remove the piston from the cylinder and remove the snap rings holding the piston wrist pins in position. It may be necessary to heat the piston and to remove the piston wrist pin.

5. Remove the rings from the piston and clean the piston. Check the following for wear or damage:

   (a) Piston and ring grooves.

   (b) Piston wrist pin.

   (c) Connecting rod bores and alignment (Fig. 7A–76, 7A–77, 7A–78).

   (d) Check the cylinder bore in several locations (Fig. 7A–79).

Use a press to remove the bushing from the rod if the bearing needs replacement (Fig. 7A–80).

7A–8.1 Assembly

1. Hone the cylinder and check the size of the cylinder. Use a piston to push the rings onto the bore. Check the end gap of the rings (Fig. 7A–81) (See *Ring End Gap Specifications* Page 8B–5).

2. Assemble the piston as shown in (Fig. 7A–82). The arrow at the top of the piston must be pointed toward the long side of the piston rod (Fig. 7A–82). Install the piston wrist pin through the rod and the piston and install the snap rings.

3. Install the piston rings on the piston with the mark on the ring toward the top. Turn the piston rings so the gaps are 120 ° apart.

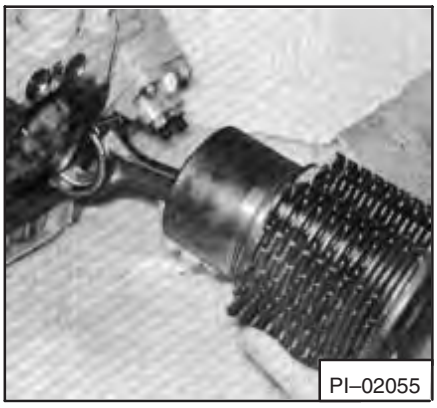

Fig. 7A–75 Removing Rod And Cylinder

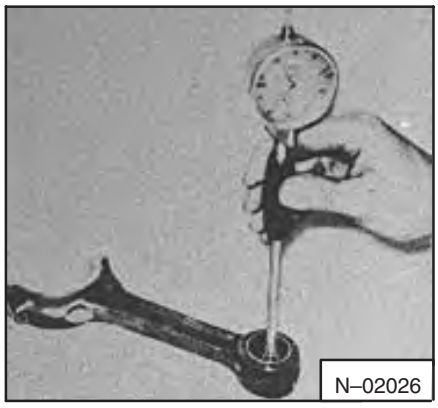

Fig. 7A–76 Checking Wrist Pin Bushing

Fig. 7A–77 Checking Rod Bearing

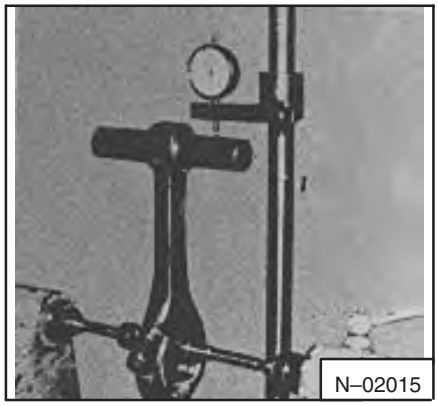

Fig. 7A–78 Checking The Rod

Fig. 7A–79 Checking The Cylinder Wall

Fig. 7A–80 Removing Wrist Pin Bushing

Fig. 7A–81 Checking The Ring Gap

Fig. 7A–82 Piston Assembly

4. Install the piston assembly in the cylinder with the arrow on the top of the piston, pointing toward the exhaust side of the engine (Fig. 7A–83). Use a ring compressor special tool (P/N 003–0430 available from your local Deutz dealer).

5. If the old bearings are to be used again, install them as marked. If new bearings are to be installed, use plastic gauge to check the clearance of the bearing to the crankshaft (See *Connecting Rod Clearance Specifications* Page 8B–5).

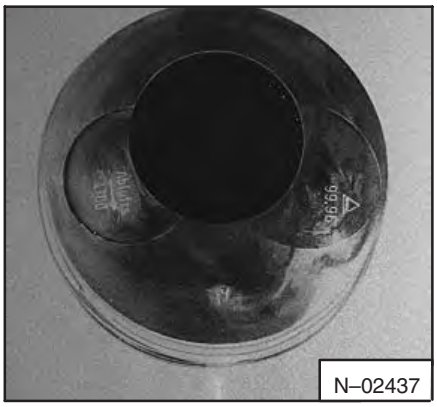

Fig. 7A–83 Arrow On Piston

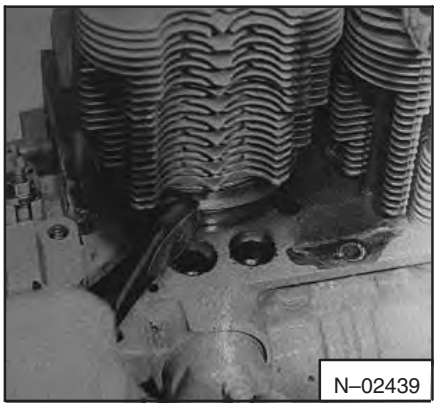

Fig. 7A–84 Installing Shims

6. Install the shims on the cylinder as noted during disassembly (Fig. 7A–84).

7. Position the cylinder and piston assembly into the crankcase. Be careful not to damage the crankshaft surface. Install and tighten the rod cap (See *Torque Specifications*, Page 8B–6).

7A–9 OIL PUMP, FILTER HOUSING AND RELIEF VALVE

7A–9.1 Oil Pump Removal

1. Remove the oil pan and the front cover.

2. Remove the bolt that holds the oil pump in position (Fig. 7A–85).

3. Turn the pump as shown in figure 7A–86. Remove the oil pump from the crankcase.

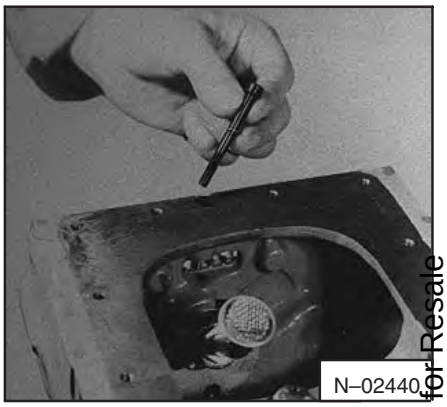

Fig. 7A–85 Removing The Bolt

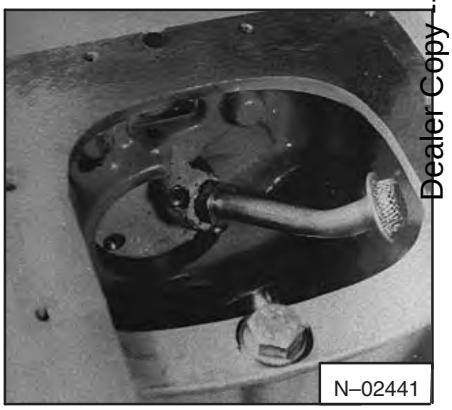

Fig. 7A–86 Removing The Oil Pump

7A–9.2 Installation

Installation is the reverse of removal.

NOTE: The oil pump cannot be serviced. A new oil pump with a new gear must be installed if any part has damage. Check the end play to find the condition of the oil pump (Fig. 7A–87) (See *ENGINE SPECIFICATION*, Section 8).

7A–9.3 Oil Pressure Relief Valve

The oil pressure relief valve is in the engine block. Do not change the length of the spring and do not add shims to the valve.

Fig. 7A–87 Checking End Play Of Oil Pump

7A–10 ENGINE FRONT COVER

7A–10.1 Removal

1. Remove the fuel injection pump (See Section 7A–2.7 *Removal Of The Injection Pump*).

2. Remove the cooling blower, generator and pulley from the governor shaft.

3. Remove the bolts around the outside of the cover.

4. Lift off the front cover . Be careful not to lose the dowel pins.

Fig. 7A–88 O–Rings On Plugs

7A–10.2 Disassembly And Inspection

1. Put new sealing washers under the two plugs (Fig. 7A–88).

2. Remove the old seal from the governor shaft and install a new seal as shown in figure 7A–89, 7A–90.

3. Check the excess fuel button for damage or wear . Replace the O–ring and put grease in the center groove for the O–ring (Fig. 7A–91).

4. If you replace the spring on the fuel excess button. The spring must be turned 3/4 of a turn to put tension to the lever (Fig. 7A–92).

5. Remove the pin from the throttle control lever , and remove the lever from the shaft (Fig. 7A–93).

6. Remove the two bolts which hold the governor spring in position. Remove the shaft.

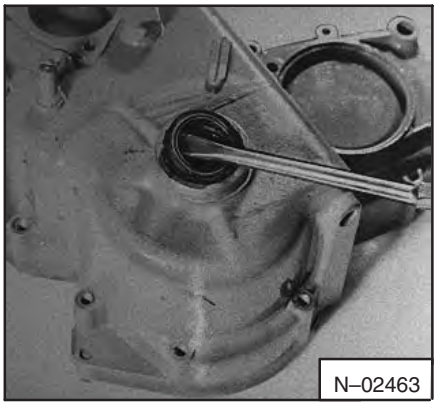

Fig. 7A–89 Removing The Cover Seal

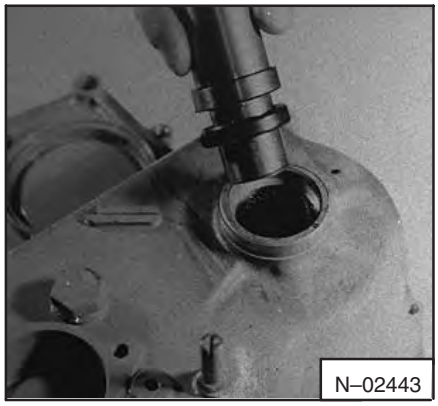

Fig. 7A–90 Installing Cover Seal

Fig. 7A–91 Lubrication Of O–Ring

Fig. 7A–92 Setting Spring Tension

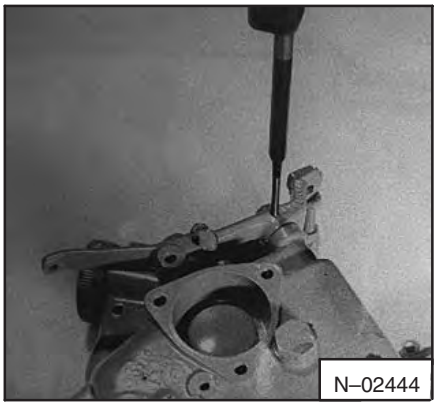

Fig. 7A–93 Removing Pin

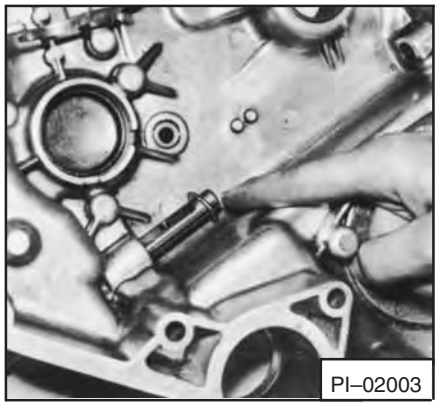

Fig. 7A–94 Installing Shaft Bolt

7A–10.3 Assembly

1. Put the shaft into the cover and install the washer (Fig. 7A–94).

2. Put the shaft in position to install the control arm (Fig. 7A–95).

3. Put the spring on and connect it as shown in figure 7A–97.

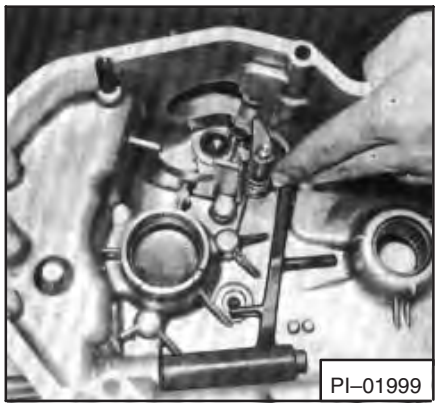

Fig. 7A–95 Control Arm Linkage

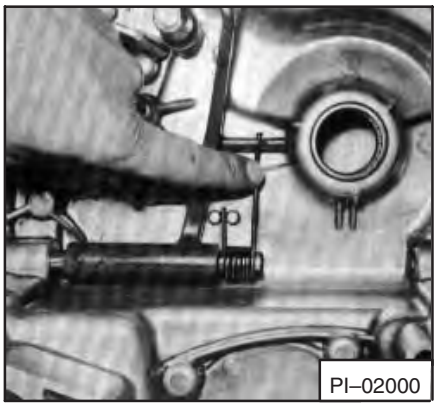

Fig. 7A–96 Lever Spring

4. Move the shaft in more and install the governor spring. Tighten the bolts that hold the spring in position (Fig. 7A–95).

5. Install a snap ring on each side of the control arm (Fig. 7A–98).

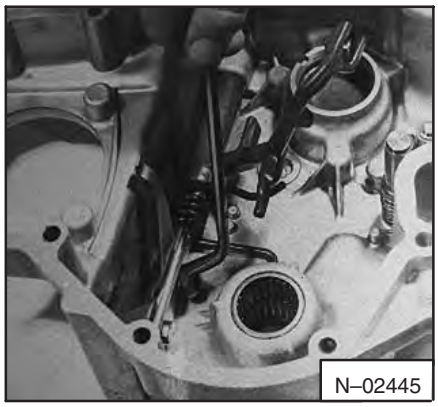

Fig. 7A–97 Installing Governor Spring

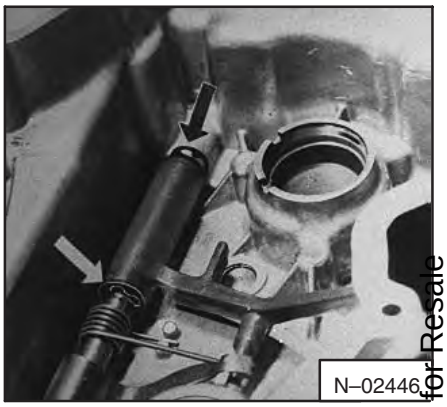

Fig. 7A–98 Installing Snap Rings

6. Install the O–ring on the shaft (Fig. 7A–99). Install the throttle lever and leaf spring on the shaft and install the locking pin (Fig. 7A–100).

Fig. 7A–99 Installing O–Rings On Shaft

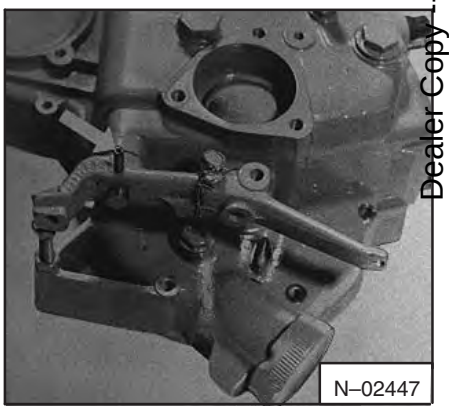

Fig. 7A–100 Installing Roll Pins

7A–10.4 Installation

1. Put dowel pins in front cover and apply gasket sealant to the front cover (Fig. 7A–101).

2. With the camshaft pushed against its contact surface measure the distance (Fig. 7A–102) from the front of the collar to the front of the engine housing.

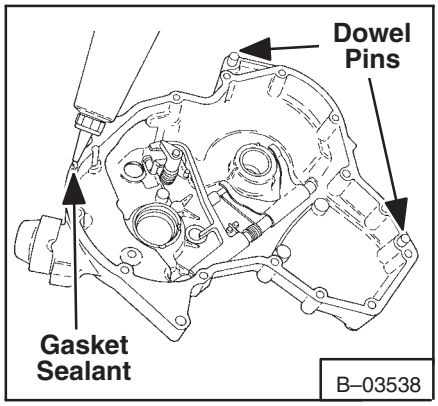

Fig. 7A–101 Location Of Dowel Pins

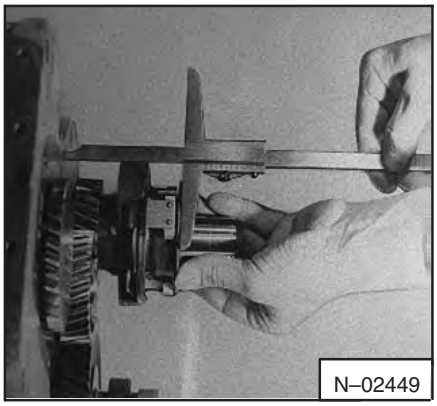

Fig. 7A–102 Checking End Clearance

3. Measure the distance (Fig. 7A–103) between the stop and the joint surface of the front cover (Fig. 7A–103).

4. Dimension *B* must be more than dimension *A*. The maximum must not be more than 0.024 inch (0,6 mm). If it is a new front cover must be installed.

5. Install the cover bolts and tighten them evenly.

6. Adjust high and low idle speeds (See Page 8A–2.2, Page 8A–3) for the correct adjustments.

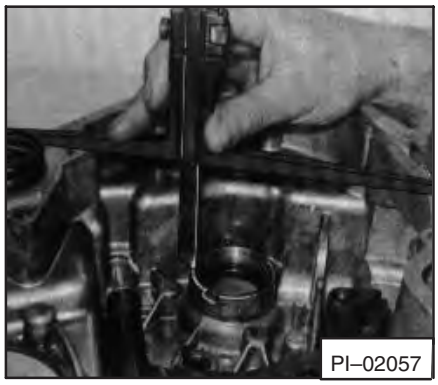

Fig. 7A–103 Cover And Camshaft Clearance

7A–11 GOVERNOR

7A–11.1 Removal And Disassembly

1. Remove the injection pump, blower and front cover. Remove the governor shaft.

2. Use two screwdrivers to remove the gear and shaft from the engine block.

3. Remove the wire retainer and disassemble the governor.

4. Check all parts for wear or damage.

Fig. 7A–104 Governor Bearing

7A–11.2 Assembly And Installation

1. Put grease on the inside of the ring to hold the balls in position. Install the balls. Put the outer race over the balls (Fig. 7A–104).

2. Turn the bearing cup face down and install the shims with the tabs up (Fig. 7A–105). Put the bearing assembly over the cup and shims and install the snap ring (Fig. 7A–106).

3. Use a soft hammer to install the shaft and gear into the engine block. The timing marks must be in alignment (Fig. 7A–107).

4. Install the governor weights and the governor (Fig. 7A–108).

5. Install any other parts removed.

Fig. 7A–105 Installing Shims

Fig. 7A–106 Retainer Ring

Fig. 7A–107 Alignment Of Gears

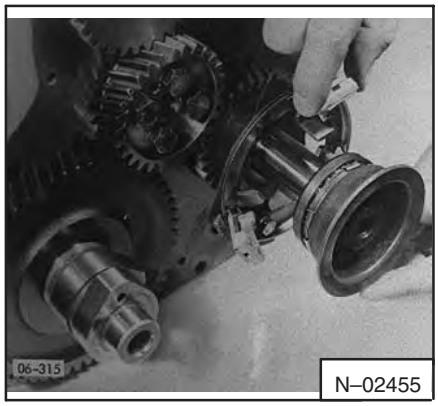

Fig. 7A–108 Installing Flyweights

7A–12 CAMSHAFT (Engine Must Be Removed From The Machine)

7A–12.1 Removal

1. Remove the injection pump.
2. Remove the blower and air housing, the front cover and the rocker arm covers.
3. Remove the rocker arms and push rods.
4. Position the engine so the exhaust manifold is up.
5. Remove the fuel lift pump.
6. Remove the camshaft. Be careful not to damage the camshaft bushing.
7. Remove the oil pan. Remove the tappets. Check all parts for wear or damage.
8. If the bushing is good, it can be used again. If not, use a driver to push out the old bushing and install a new bushing. Align the oil holes in the bushing with those in the block when you install a new bushing (Fig. 7A–109).

Fig. 7A–109 Installing Camshaft Bearings

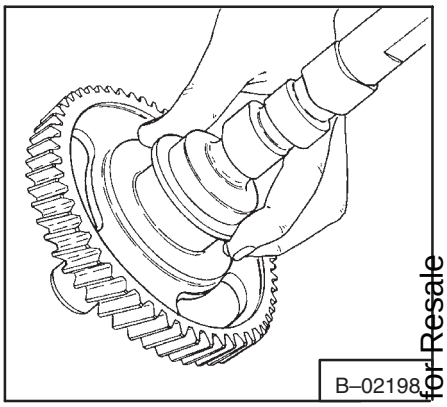

Fig. 7A–110 Installing Thrust Washer

7A–12.2 Installation

1. Install the tappets from inside the crankcase.
2. Put oil on the thrust washer and put it on the camshaft (Fig. 7A–110).
3. Install the oil pan and turn the engine upright.
4. Install the fuel lift pump, push rods and rocker arms.
5. Install the fuel injection pump and any other parts removed.
6. Prime the fuel injection system.

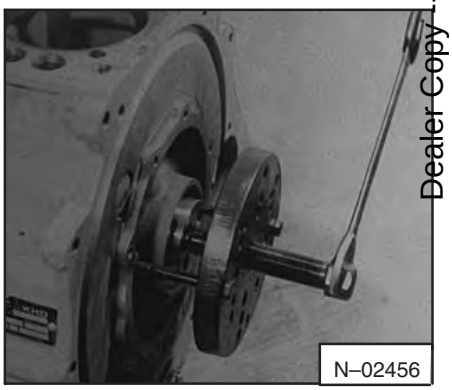

Fig. 7A–111 Removing Flywheel & End Cover

7A–12.3 Crankshaft Removal

1. Remove the cylinder heads, pistons and rods.
2. Remove the front cover (See Section 7A–10). Remove the crankshaft gear.
3. Remove the oil pan and the oil pump.
4. Remove the flywheel and end cover (Fig. 7A–111).
5. Remove the bolt from the center main bearing. Remove the crankshaft from the engine block.
6. Remove the center main bearing from the crankshaft (Fig. 7A–112).

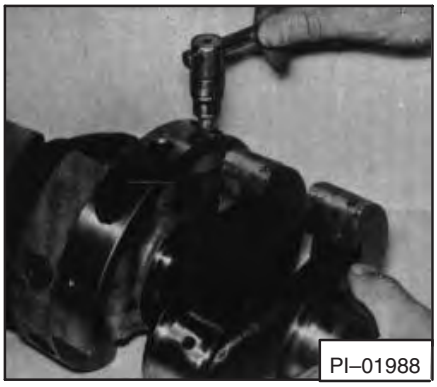

Fig. 7A–112 Removing Center Main Bearing

7A–12.4 Inspection

Clean all parts and check them for wear or damage.

1. Check the crankshaft. Replace the crankshaft or have it ground as needed (See Section 8 for *SPECIFICATIONS*).
2. Install the correct bearing shell in the center main bearing.
3. Check the thrust washers for wear and damage (See Section 8 for *SPECIFICATIONS*).

Fig. 7A–113 Installing Bearing

7A–12.5 Assembly

1. Install the correct bushing into the block and end plate. The oil holes in the bushings must be in alignment with the holes in the block and end plate (Fig. 7A–113).

NOTE: The bearing will be extended 0.055 – 0.067 inch (1,4–1,7 mm) outside the front of the block.

2. Put grease on the thrust washer in the crankcase to hold it in position. The tab on the washer must align with the slot (Fig. 7A–114).

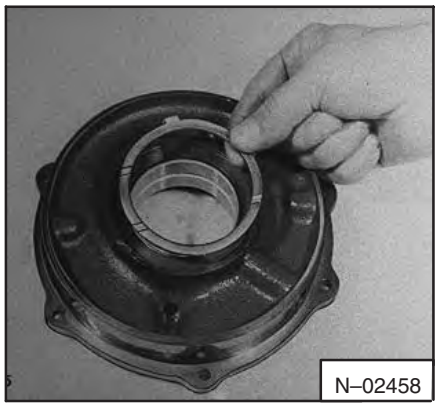

Fig. 7A–114 Installing Thrust Washer

3. Install the bearings of the correct size in the center bearing support and install the support on the crankshaft. The numbers on the support must be matched (Fig. 7A–115). The spray nozzle for cooling #1 piston must be turned toward the fan side.
4. Put the crankshaft in the block. Be careful not to damage the bushing in the block during installation. The hole in the bearing support must be in alignment with the holes in the block (Fig. 7A–116).

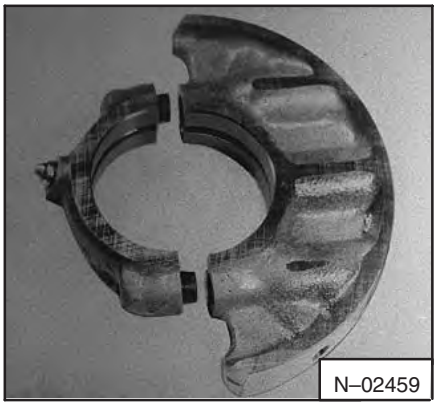

Fig. 7A–115 Bearing Support Marks

Fig. 7A–116 Installing Crankshaft

5. Install the thrust washer, seal and gasket in the end plate (Fig. 7A–112). The hole in the block must be in alignment with the hole in the plate. Put the plate in position and install 2 bolts (Fig. 7A–117).
6. Measure the end play of the crankshaft (Fig. 7A–1 18). If the movement is not in the specifications install or remove paper gaskets as needed to gethe correct clearance.

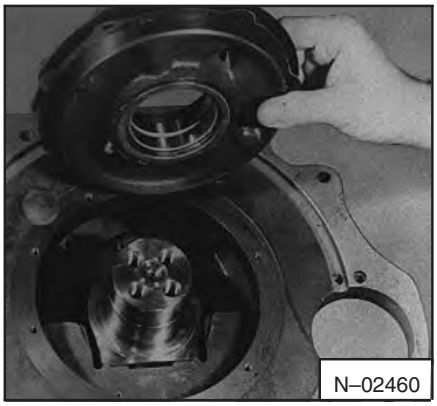

Fig. 7A–117 Installing End Plate

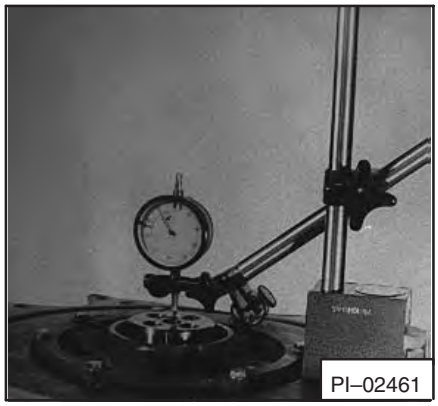

Fig. 7A–118 Checking End Play

7. Tighten all bolts in the end plate and the bolt in the main bearing support. Check the crankshaft. The gear must fit on the location pin in the crankshaft and the timing marks must be in alignment (Fig. 7A–119)

7A–13 UNIVERSAL JOINT

7A–13.1 Universal Joint Removal

The tools listed will be needed to dothe following procedure:

MEL1187 Socket

1. Remove the engine (See Paragraph 7A–6, Page 7A–9).
2. Remove the four bolts (Fig. 7A–120), holding the U–joint on the flywheel.
3. Remove the U–joint assembly (Fig. 7A–121).

7A–13.2 Universal Joint Installation

1. Put blue LOCTITE 242 on the four bolts.
2. Put spline lube (MEL1121) on the splines.
3. Install the U–joint.
4. Install the bolts and tighten 270–300 in.–lbs. (31–34 Nm) torque.

7A–14 FLYWHEEL

7A–14.1 Flywheel Removal

1. Remove the bolts that attach the fan to the flywheel (Fig. 7A–122).
2. Remove the fan (Fig. 7A–123).
3. Remove the flywheel bolts. Replace the bolts with new ones when the flywheel is installed.
4. Remove the flywheel (Fig. 7A–124).

7A–14.2 Flywheel Installation

1. Install the flywheel.
2. Install four new bolts. Tighten the four bolts in the sequence shown in figure 7A–125 using the following procedure:

   (a) Tighten each bolt to 20–25 ft.–lbs. (27–34 Nm) torque using the sequence shown in figure 7A–125.

   (b) Then turn each bolt 60° in the sequence shown in figure 7A–125.

   (c) Turn each bolt an additional 60° in the sequence shown in figure 7A–125.

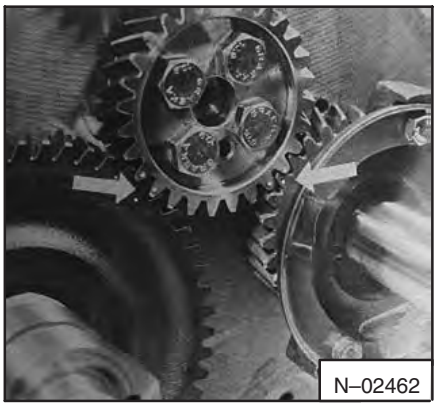

Fig. 7A–119 Aligning Timing Marks

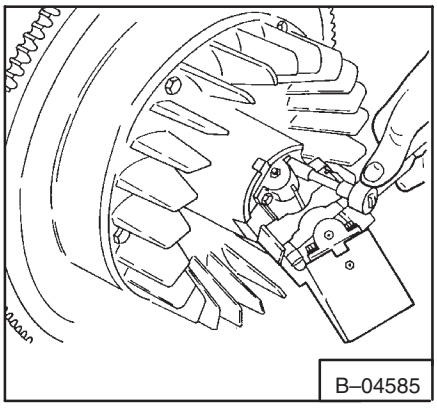

Fig. 7A–120 Removing U–Joint Bolts

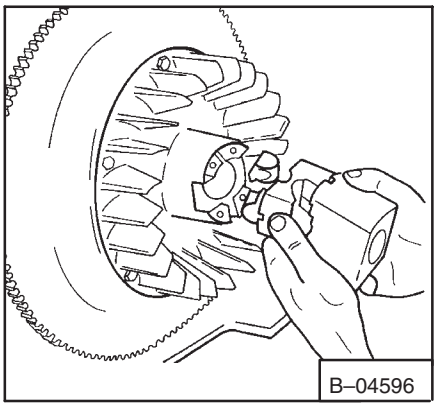

Fig. 7A–121 Removing U–Joint

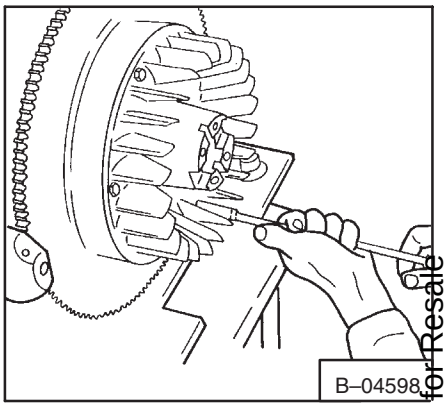

Fig. 7A–122 Removing Bolts

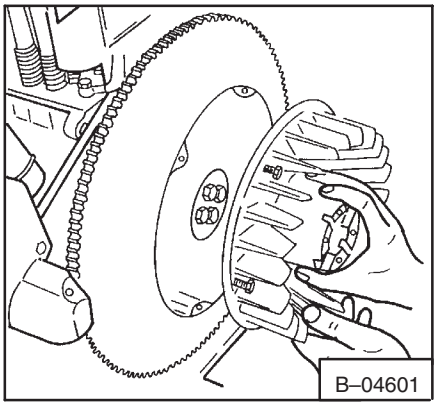

Fig. 7A–123 Removing Blower Fan

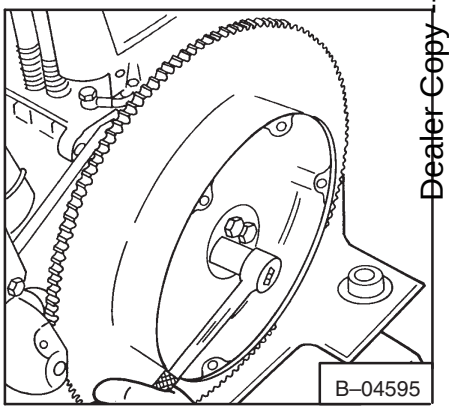

Fig. 7A–124 Removing Flywheel Bolts

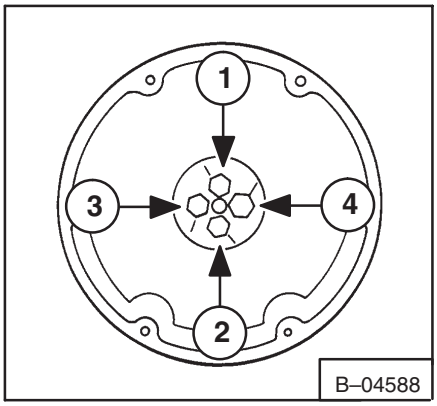

Fig. 7A–125 Tightening Sequence

7A–14.3 Removing The Ring Gear

The ring gear for the starter is removed with a hammer and a blunt punch (Fig. 7A–126).

To install the new ring gear, heat the ring to 450–500 ° F. (200° C.) and install it onto a cool flywheel.

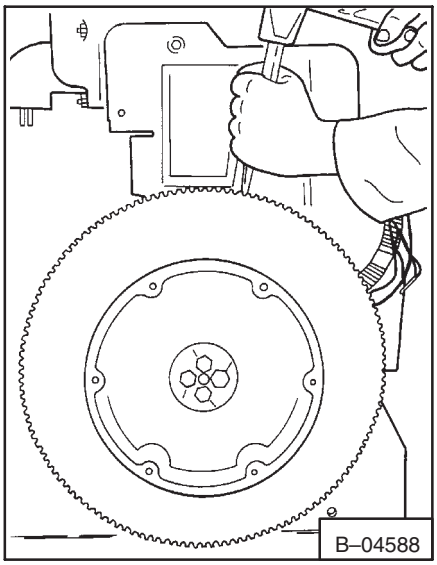

Fig. 7A–126 Removing Ring Gear

7A–15 ENGINE OIL COOLER

Use new sealing rings on the banjo bolts (Fig. 7A–127) every time they are removed.

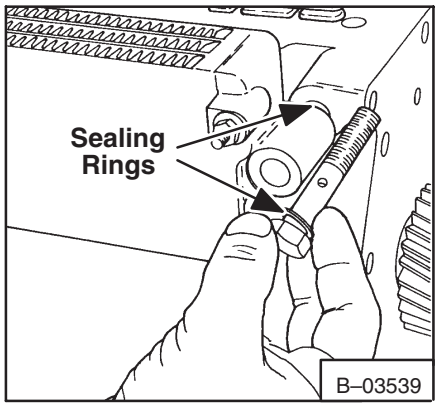

Fig. 7A–127 Sealing Rings

7A–16 ENGINE SHROUDING

To remove the blower housing remove the bottom bolt or rivet (Fig. 7A–128) and remove the shrouding (Fig. 7A–129). If there is a rivet instead of a bolt, use a punch to drive the rivet down.

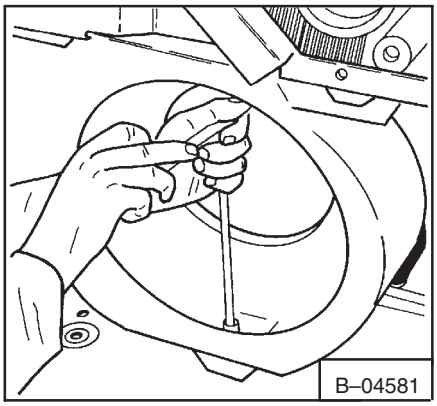

Fig. 7A–128 Removing Blower Housing

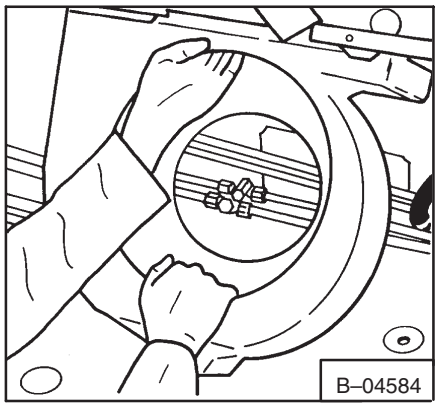

Fig. 7A–129 Removing Shrouding

7A–17 ENGINE MOUNTS

7a–17.1 Replacing Engine Mounts

1. Lubricate with soap and water the outside of the rubber mounts (Fig. 7A–130, Item 1) and install them in the engine mounts.
2. Install the front mount on the engine. Use a liquid adhesive LOCTITE on the bolts (Fig. 7A–130, Item 2). T ighten the bolts to 90–100 ft.–lbs. (125–135 Nm) torque.
3. Install the rear mount on the engine. Use a liquid adhesive LOCTITE on the bolts. Tighten the four bolts (Fig. 7A–130, Item 3) to 65–75 ft.–lbs. (88–95 Nm) torque.
4. Install the engine.
5. Install the four bolts (Fig. 7A–130, Item 4) and tighten to 90–100 ft.–lbs. (125–135 Nm) torque.

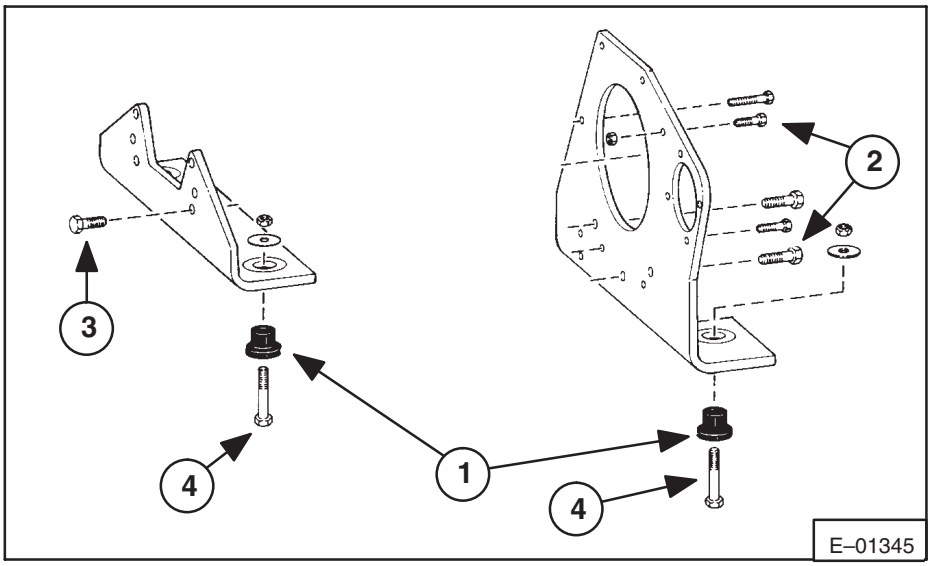

Fig. 7A–130 Engine Mounts

7A–18 MUFFLER

7a–18.1 Removal Of The Muffler

1. Remove the grill (Fig. 7A–131).

2. Remove the clamp (Fig. 7A–132).

3. Remove the four bolts holding the muffler and remove the muffler (Fig. 7A–133).

Installation is the reverse of removal.

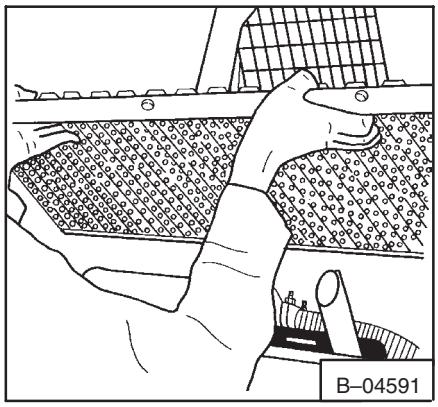

Fig. 7A–131 Removing The Grill

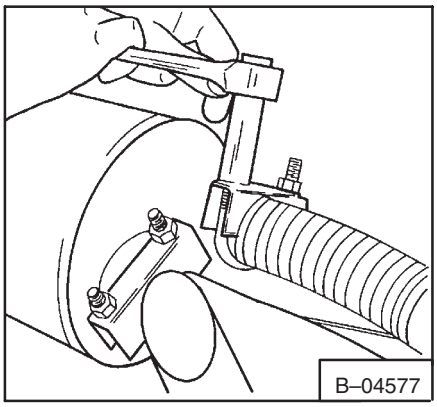

Fig. 7A–132 Removing Clamp

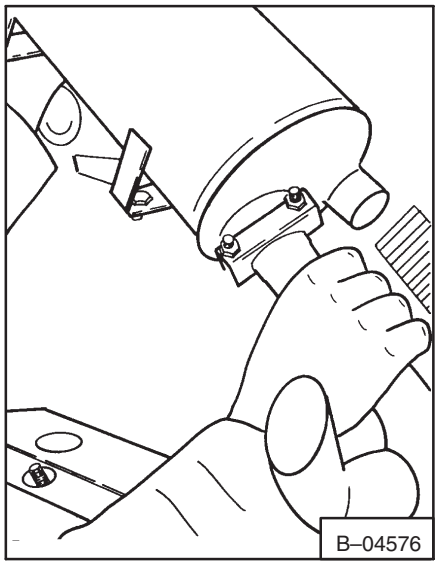

Fig. 7A–133 Removing Muffler

7A–19 STARTER

7A–19.1 Starter Removal

1. Remove the battery cables (negative first).

2. Remove the mounting bolts (Fig. 7A–134).

3. Remove the starter (Fig. 7A–135).

Installation is the reverse of removal.

See Paragraph 6–7, Page 6–9 for starter repair.

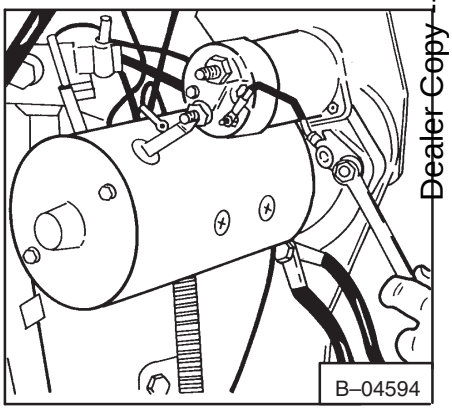

Fig. 7A–134 Removing Starter Bolts

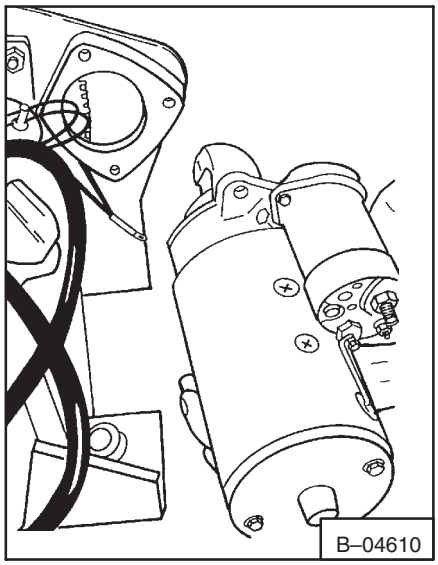

Fig. 7A–135 Removing The Starter

ENGINE SERVICE (642)

Continued On Next Page

WARNING

Instructions are necessary before operating or servicing machine. Read Operation & Maintenance Manual, and signs (decals) on machine. Follow warnings and instructions in the manuals when making repairs, adjustments or servicing. Check for correct function after adjustments. repairs or service. Failure to follow instructions can cause injury or death.

W–2144–0189

7B–1 Troubleshooting

PROBLEM	CAUSE	CORRECTION
Engine will not turn over with the starter.	Battery has lost its charge.	Charge the battery. Check the functions of the charging system.
	Loose battery connection.	Clean battery connections and cables. Tighten the clamps.
	Loose starter connections.	Tighten the connections.
	Starter switch has damage.	Make replacement of the switch.
	Fuse has damage.	Install a new fuse of the correct amp. rating.
	Damaged or disconnected wiring harness.	Connect or make replacement of the wiring.
	Starter or solenoid has damage.	Make repair as needed.
Engine does not start or is difficult to start.	Wrong starting procedure.	Refer to *Starting Procedure* in the Bobcat Operator's Manual.
	No fuel in the tank.	Add fuel.
	Air cleaner is dirty.	Make replacement of the air cleaner element.
	Fuel tank vent in cap has restriction.	Remove the cap and clean the vent.
	Fuel line has air leak or dirt or water.	Correct as needed.
	Fuel pump has damage.	Make replacement of the pump.
	Hydraulic/Hydrostatic load on the engine.	Put all controls in neutral position and warm the oil in the reservoir during very cold temperatures.
	Ignition system has damage.	Check and make repairs as needed.
	Crankcase oil is thick.	Use engine oil of correct viscosity (See *Oil Specification Chart*).
Engine does not run smoothly or stops.	Damaged ignition system (spark plugs, points, etc.) or timing is not correct.	Make repairs as needed.
	Dirty fuel mixture, or restriction in fuel filter or vent.	Clean as needed.
	Below normal compression.	Check for loose cylinder head bolts or loose spark plugs.
	Water in the fuel.	Make replacement of the fuel.
Engine overheats.	Engine is overloaded.	Operate at rated RPM.
	Radiator grill is dirty.	Remove the grill and clean.
	Dirty engine oil.	Make replacement of the engine oil and the filter.
	Exhaust system has restriction.	Correct as necessary.
	Ignition timing is wrong.	Make adjustment as needed.
	Coolant level is low.	Add coolant.
	Oil cooler has restriction.	Find restriction and make correction.

7B–2 CHECKS AND ADJUSTMENTS

7B–2.1 Oil Pressure

Engine oil pressure can be checked by installing a gauge in the sender switch port. Normal pressure is 35–40 PSI at 2000 RPM.

7B–2.2 Valve Clearance (Fig. 7B–1)

Make adjustment of valve clearance with the engine stopped.

Put a feeler gauge between rocker arm and pushrod and turn adjustment screw in or out to get the correct clearance. (See Section 8 *TECHNICAL DATA* for the correct clearance.)

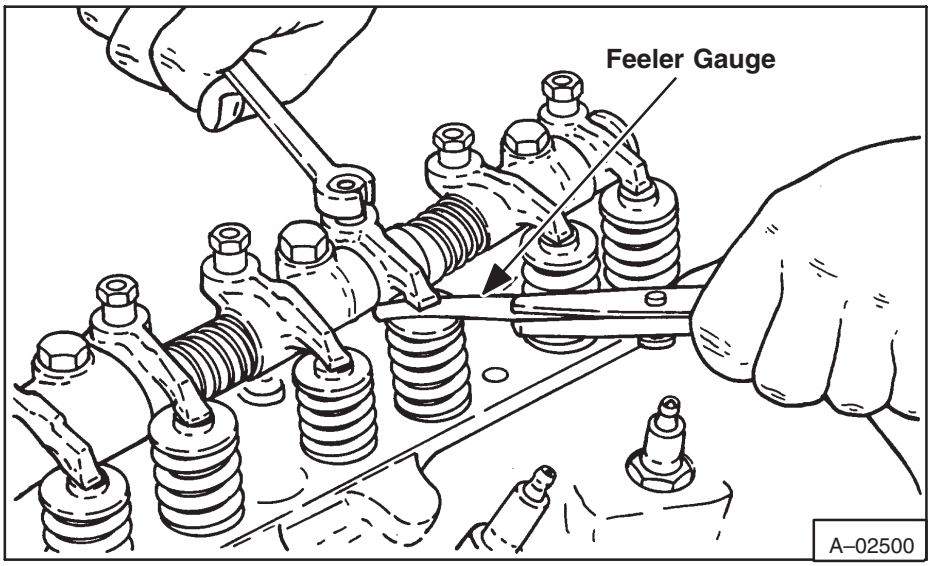

Fig. 7B–1 Adjusting Rocker Arms

7B–2.3 Compression

1. Make sure the crankcase oil level is correct, and the battery has a full charge.
2. Start the engine and operate for about 30 minutes at 1200 RPM or until the engine is at normal operating temperature.
3. Stop the engine and remove all the spark plugs.
4. Put the carburetor throttle plate and choke plate in the full open position.
5. Install a compression gauge in the No. 1 cylinder. (No. 1 cylinder is at the rear of the machine.)
6. Operate the starter until it turns the engine at least five compression strokes and record the highest reading. Count the number of compression strokes to get the highest reading.
7. Test each cylinder.
8. Make a comparison of the highest and the lowest compression readings. If the lowest is at least 75% of the highest compression pressures are normal (Fig. 7B–2).

If one or more of the cylinders show a low reading, put 1/2 oz. (14,75 ml) of oil in the low reading cylinders and make the compression test again.

1. If there is a lot of increase in the compression, the piston rings are worn.

Maximum PSI	Minimum PSI	Maximum PSI	Minimum PSI
134	101	222	166
136	102	224	168
138	104	226	169
140	105	228	171
142	107	230	172
144	108	232	174
146	110	234	175
148	111	236	177
150	113	238	178
152	114	240	180
154	115	242	181
156	117	244	183
158	118	246	184
160	120	248	186
162	121	250	187
164	123		
166	124		
168	126		
170	127		
172	129		
174	131		
176	132		
178	133		
180	135		
182	136		
184	138		
186	140		
188	141		
190	142		
192	144		
194	145		
196	147		
198	148		
200	150		
202	151		
204	153		
206	154		
208	156		
210	157		
212	158		
214	160		
216	162		
218	163		
220	165		

Fig. 7B–2 Compression Chart

2. If compression does not show increase, the valves are not operating correctly.

3. If two cylinders side by side each have a low compression and putting oil in the cylinders does not cause an increase in compression, the damage could be a cylinder head gasket leak between the cylinders.

Head gasket leakage can cause oil or coolant to enter the cylinders and cause damage to the engine.

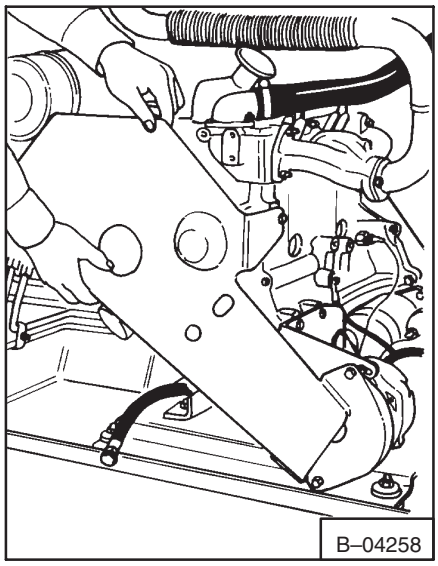

Fig.7B–3 Removing Belt Shield

7B–2.4 Carburetor, Throttle And Governor Adjustments

1. Put blocks under the frame of the Bobcat so that there is no danger of the machine falling and causing personal injury.

2. Remove the belt shield (Fig. 7B–3).

3. Loosen the governor fastening bolts and make adjustment of belt to give 0.250 inch (6,35 mm) freeplay (Fig. 7B–4). T ighten the governor fastening bolts.

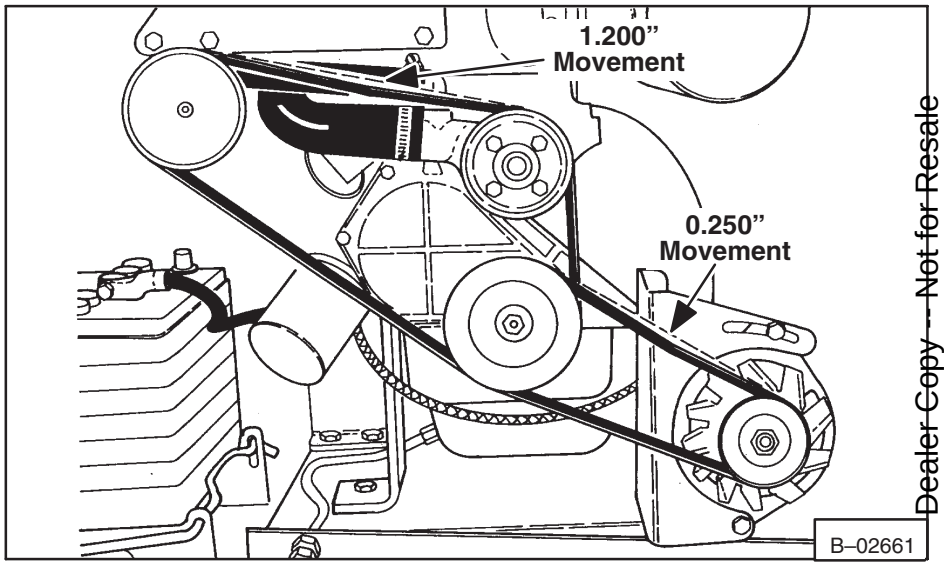

Fig. 7B–4 Belt Adjustment

4. Install the belt shield.

NOTE: If only the belt needs adjustment, make adjustment to the linkage (Fig. 7B–4,Item 1).

5. Disconnect the throttle rod andthe governor linkage (Fig. 7B–5, Item 1).

6. Remove the linkage from the governor control arm (Fig. 7b–5, Item 2).

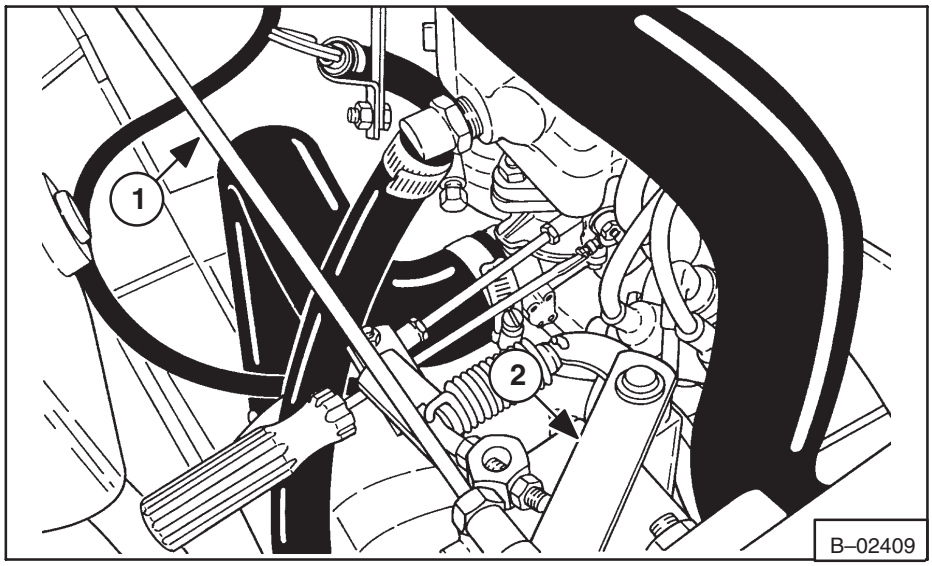

Fig. 7B–5 Throttle/GovernorAdjustment

7. Make adjustment of the linkage so the distance between the pivot points is 4.875 inches (123,8 mm), (Fig. 7B–6).

8. Check that there is free movement of the throttle plate in the carburetor.

9. Install the linkage on the governor control arm.

10. Loosen the control arm stop until it has no effect on the governor control arm (Fig. 7B–7).

11. Loosen the two screws on the governor control arm (Fig. 7B–8).

12. Move the governor control arm and control arm of the carburetor linkage as shown in (Fig. 7B–8).

13. Hold the control arm and linkage in position and tighten the two screws.

14. Start the engine and turn the idle adjustment screw on the carburetor to adjust the idle speed at 550–650 RPM (Fig. 7B–9).

15. Adjust the ignition timing. (See Section 7B–2.7 *Ignition Timing* for the correct procedure).

16. Put the throttle lever in idle position.

17. Hold the governor control arm all the way to the left as shown in (Fig. 7B–8). Then adjust the throttle rod until the pin goes into the hole in the throttle linkage.

18. Start the engine and put the throttle lever (inside the Operator Guard) at full RPM. Make adjustment to the stop bolt until the engine runs at 2600–2675 RPM.

19. Turn the control arm stop (Fig. 7B–7) until there is an increase of 25 RPM. Check the governor oil level (See Page 1–5, Paragraph 1–3.2).

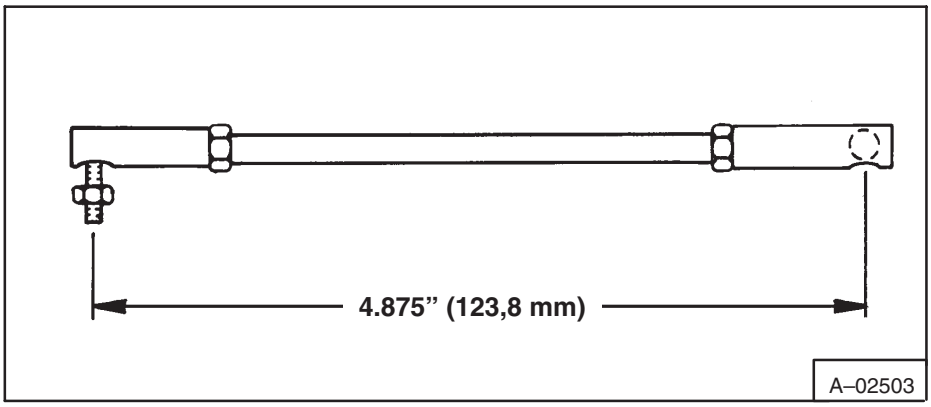

Fig. 7B–6 Linkage Adjustment

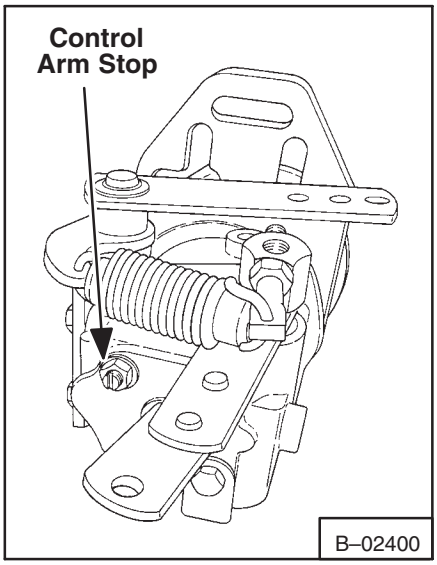

Fig. 7B–7 Control Arm Stop

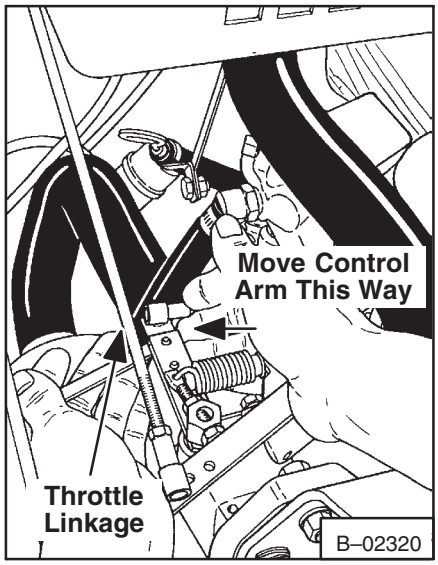

Fig. 7B–8 Control Arm Adjustment

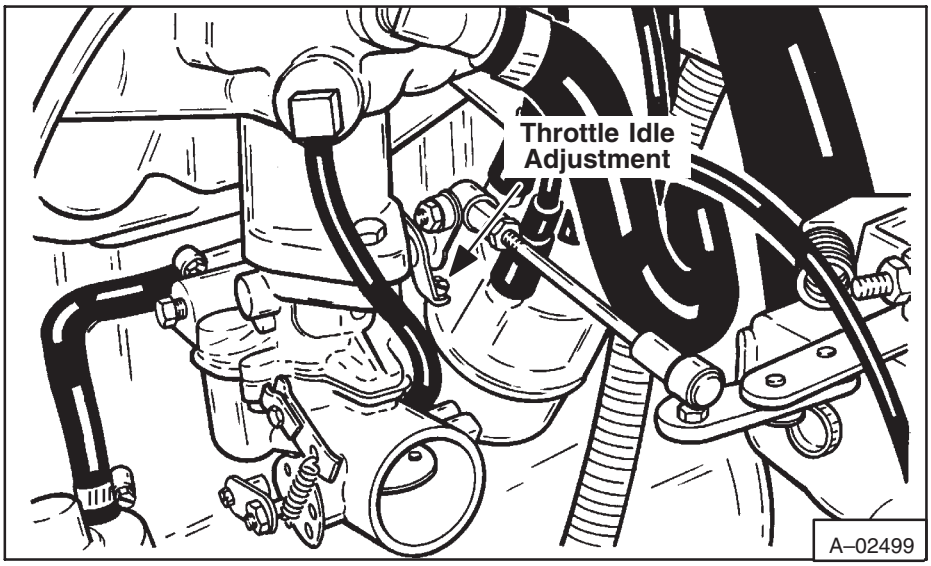

Fig. 7B–9 Carburetor Adjustment

Check the governor oil level every 100 hours of loader operation. Use the following procedure to check the oil level for the governor:

1. Remove the check plug (Fig. 7B–9a, Item 1).
2. If oil flows, level is correct.
3. If no oil flows, remove the fill plug (Fig. 7B–9a, Item 2) add SAE 10W–30 or 10W–40 oil until it flows from the check plug hole.
4. Install and tighten the check and fill plug.

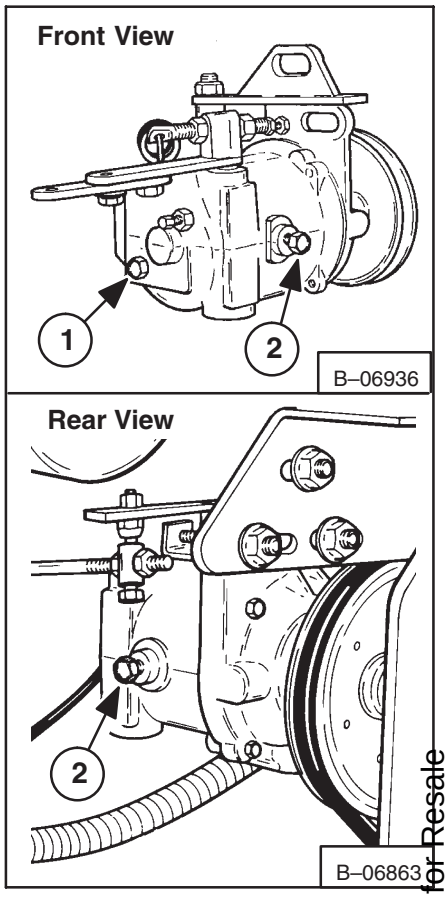

Fig. 7B–9a Governor Oil Level Check

7B–2.5 Ignition System

Coil to Ground Voltmeter Test

1. Connect the voltmeter wires as shown in (Fig. 7B–10).
2. Operate the starter until the breaker points are fully closed.
3. Turn all the lights and accessories off.
4. Turn the ignition switch on.
5. If the voltmeter reading is 0.25 volt or less the primary circuit from the coil to the ground is good.
6. If the voltmeter reading is more than 0.25 volt test the voltage loss between each of the following:

   (a) The connector marked *DIST* on the coil and the connection on the distributor.

   (b) The moving breaker point and the stationary breaker point.

   (c) The breaker point and the distributor.

   (d) The distributor housing and the engine ground.

If the voltage loss of all the above has a total of more than 0.25 volt, it will cause bad engine performance.

Spark Plug Wires Resistance Test

These wires included the wires connecting the distributor cap to the spark plug and the wire connecting the center connection of the distributor cap to the center connection of the ignition coil.

These wires are the radio resistance–type. The resistance of each wire must not be more than 5000 ohms per inch (25,4 mm). When checking the resistance of the wires or adjusting ignition timing, do not damage the wires. This can cause separation in the conductor.

Spark Plug Test

Check and clean the electrodes and adjust the spark plug gap. After the gap is correct, check the plugs on a testing machine. Compare the operation of the old plug with a new plug.

Distributor Tests

Test Connections

1. Disconnect the distributor primary wire from the coil. Connect a short jumper wire to the *DIST* connection of the coil and the distributor primary wire. Connect the red wire to the jumper wire.

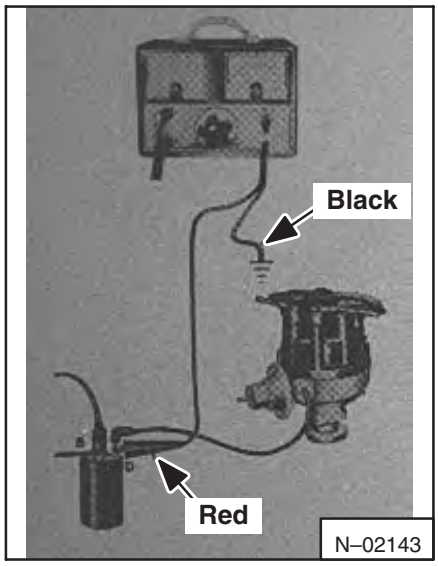

Fig. 7B–10 Coil To Ground Test

2. Connect the block wire to a good ground location on the engine.

Dwell Angle Check

1. Connect the tester.
2. Turn the test control knob to the set position.
3. Adjust the control knob until the needle on the dwell meter is in alignment with the set line.
4. Start the engine and let it idle.
5. Turn the cylinder selector to the four.
6. Read the dwell angle on the dwell meter and compare the reading to specifications in (Section 8 *TECHNICAL DATA*).
7. Turn off the engine.
8. If the dwell angle was below the specified amount, the breaker point gap is wide. If the dwell angle was above the specified amount, the breaker point gap is narrow.

If the dwell is at specifications turn the test selector knob to the OFF position and disconnect the tester leads and jumper wire.

Make adjustment to the points as needed.

Spark Strength Tests

1. Remove the coil high voltage wire from the distributor cap.
2. Turn the ignition switch to ON position.
3. While holding the high tension lead about 0.1875 inch from the cylinder head or any other good ground turn the engine over . If the spark is good, the problem is in the secondary circuit. Spark plugs or spark plug wires are damaged.

If there is no spark or a small amount of spark, the problem is the primary circuit. The coil to the distributor wire, or the coil is damaged.

7B–2.6 Ignition System Tests

Battery To Coil Voltmeter Test

1. Connect the voltmeter wires as shown in (Fig. 7B–11).
2. Connect a jumper wire to the distributor connection of the coil and to a good ground location on the distributor housing.
3. Turn the lights and accessories off.
4. Turn the ignition switch to ON position.
5. If the voltmeter reading is between 4.5 and 6.9 volts the primary circuit from the battery to the coil is good.

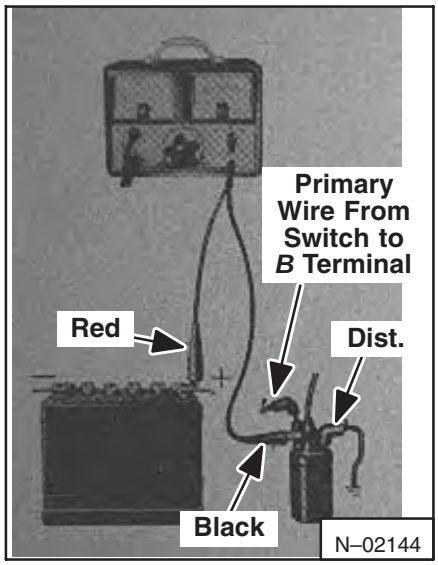

Fig. 7B–11 Battery To Coil Test

6. If the voltmeter reading is more than 6.9 volts, check the following:

   (a) The battery and cables for loose connections or corrosion.

   (b) The primary insulation, broken wires and loose or corroded connections.

   (c) If the voltmeter reading is less than 4.5 volts, the ignition resistor must be replaced.

   (d) Check the starter relay to the ignition switch for damage.

Starting Ignition Circuit Voltmeter Test

1. Connect the voltmeter wires as shown in (Fig. 7B–10).

2. Disconnect and ground the coil to distributor high voltage wire at the distributor.

3. With the ignition switch in the OFF position turn the engine with an auxiliary starter switch while reading the voltage loss.

4. If the voltage loss is 0.4 volt or less, the starting ignition circuit is good.

5. If the voltage loss is more than 0.4 volts clean and tighten the connections in the circuit or make replacement of the wiring as needed.

Breaker Point Gap Adjustment

1. Turn the engine over until the points are fully opened.

Put the correct thickness blade of a clean feeler gauge between the breaker points (Fig. 7B–12). Make adjustment of the points to correct gap and tighten the screws.

Clean the cam area, then put a small amount of cam lubricant on the cam when new points are installed. Do not use engine oil as a lubricant.

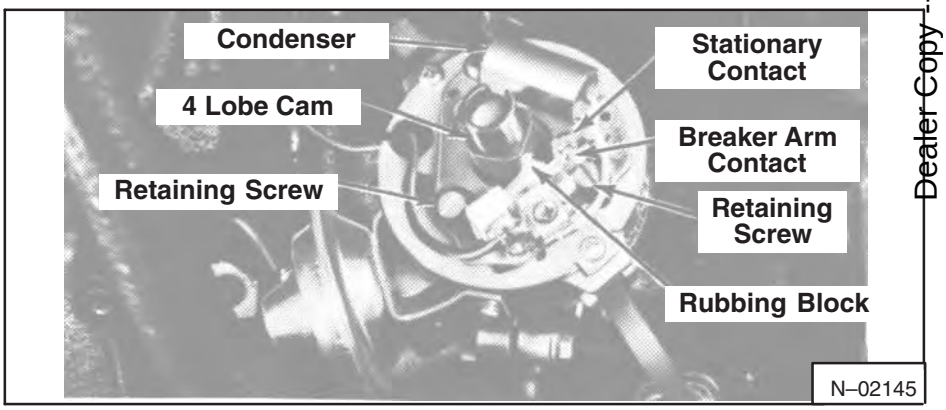

Fig. 7B–12 Point Gap Adjustment

7B–2.7 Ignition Timing

Timing Marks Location

The timing mark locations are shown in (Fig. 7B–13).

Initial Ignition Timing

1. Disconnect the vacuum advance hose from the distributor and put a plug in the hose.

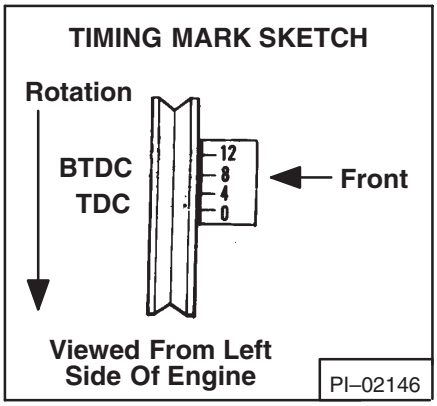

Fig.7B–13 Timing Marks

2. Clean and mark the correct timing mark with chalk or white paint.

3. Connect a timing light to No. 1 cylinder spark plug wire (Fig. 7B–14). Connect a tachometer to the engine.

4. Start the engine and decrease the idle speed to 750 RPM to make sure that the centrifugal advance is not operating. Make the adjustment of the initial ignition timing to 12° B.T.D.C. by loosening the 0.4375 inch bolt and rotating the distributor in the correct direction.

5. Check the centrifugal advance for correct operation by starting the engine and running the engine at 2000 RPM. If the ignition timing advances, the centrifugal advance mechanism is operating correctly . Note the engine speed when the advance starts and the amount of total advance. Stop the engine.

6. Connect the vacuum hose.

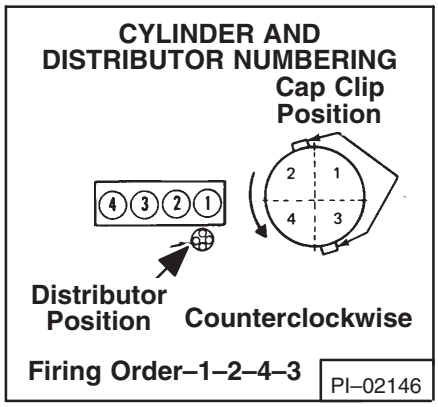

Fig. 7B–14 Firing Order

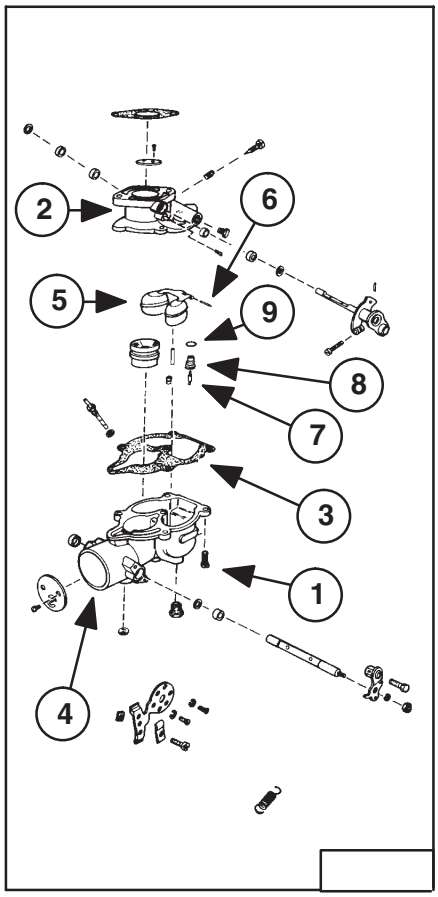

Fig. 7B–15 Carburetor Assembly

7B–3 CARBURETOR REPAIR (Fig. 7B–15)

1. Remove the four screws (Item 1).

2. Remove the throttle body (Item 2) and the gasket (Item 3) from the fuel body (Item 4). Be careful not to cause damage to the float assembly (Item 5).

3. Put a screwdriver against the float axle (Item 6) at the slotted side of the float hinge and push the axle through the slotted side of the bracket. Remove the hinge and remove the float assembly (Item 5).

4. Remove the fuel valve needle (Item 7), the valve seat (Item 8) and the fiber washer (Item 9).

5. Use new parts in the repair kit to replace the above parts.

6. The correct float level for the carburetor is 1.125 inches to 1.1875 inches as measured from the machined surface of the throttle body (inverted) to the top of the float (Fig. 7B–15a). Measurement is made without the gasket.

7. Use a needle nose pliers to bend the lever on the float body to get the correct float adjustment.

NOTE: If parts need replacement and are not in the carburetor kit, replace the carburetor assembly.

7B–4 ENGINE DIAGNOSIS AND TESTING

7B–4.1 Camshaft Lobe Lift

Check the lift of each camshaft lobe and make a note of the readings.

1. Remove the rocker arm cover.

2. Remove the rocker arm shaft assembly.

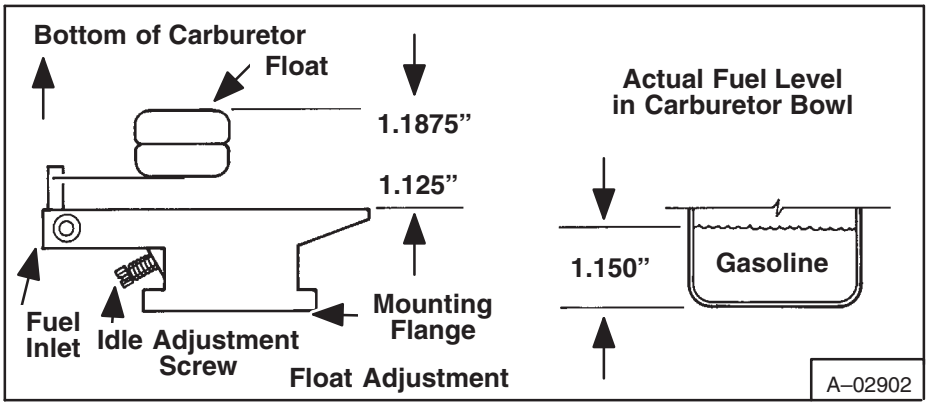

Fig. 7B–15a Float Level Adjustment

3. The pushrod must be in the valve lifter socket. Install a dial indicator so the ball socket adapter of the indicator is on the end of the pushrod and is vertical with the pushrod movement (Fig. 7B–16).

4. Turn the crankshaft over until the lifter is in its lowest position, highest indicator reading.

5. Position the dial indicator at zero. Continue to rotate the crankshaft at a slow rate until the pushrod is in the highest position, highest indicator reading.

6. Compare the total reading on the indicator with the specifications.

7. To check the original indicator reading, continue to rotate the crankshaft until the indicator reads zero. If the reading on any lobe is below the specified wear limits, the camshaft and the valve lifters must be replaced.

8. Remove the dial indicator gauge.

9. Install the rocker shaft assembly.

10. Install the rocker cover.

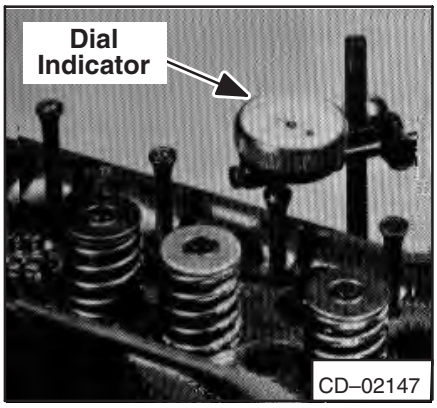

Fig. 7B–16 Checking Camshaft Lift

Fig. 7B–17 Checking Crankshaft End Play

7B–4.1 Crankshaft End Play

1. Move the crankshaft toward the rear, flywheel end, of the engine.

2. Install a dial indicator and position the contact point against the crankshaft flange at the front of the engine and the indicator is parallel to the crankshaft (Fig. 7B–17).

3. Position the dial indicator at zero. Push the crankshaft forward and note the reading on the dial.

4. If the end play is more than the wear limit, according to specifications, install new thrust washers. If the end play is less than the minimum limit, check the thrust bearing surfaces for scratches, rough areas or debris.

7B–4.2 Flywheel Surface Alignment Check

1. Move the crankshaft fully forward or to the rear.

2. Install a dial indicator so that the indicator point is against the flywheel surface.

3. Position the dial indicator at zero and turn the crankshaft. Check the indicator reading.

4. If alignment is not to specification, remove the flywheel and check for dirt or other debris between the flywheel and crankshaft flange. If alignment is not to specifications, install a new flywheel or grind the crankshaft or flywheel as needed to correct the alignment.

7B–4.3 Camshaft End Play

1. Push the camshaft toward the rear, flywheel end, of the engine.
2. Install a dial indicator. Position the indicator point on the hub of the camshaft sprocket.
3. Position the dial indicator at zero.
4. Put a large screwdriver between the camshaft sprocket and the cylinder head. Pull the camshaft forward and release it.
5. Check the indicator reading. If reading is more than the specification replace the thrust plate that holds the camshaft.

7B–5 ENGINE REMOVAL

1. Remove the temperature sender (Fig. 7B–18).
2. Install a fitting of the correct threads in the sender hole location (Fig. 7B–19).
3. Install a hose on the fitting and drain the coolant into a container (Fig. 7B–20).
4. Remove the grill (Fig. 7B–21).
5. Remove the radiator cap (Fig. 7B–22).
6. Remove the line from the coolant recovery tank and remove the tank (Fig. 7B–23).
7. Loosen the exhaust pipe clamp (Fig. 7B–24).

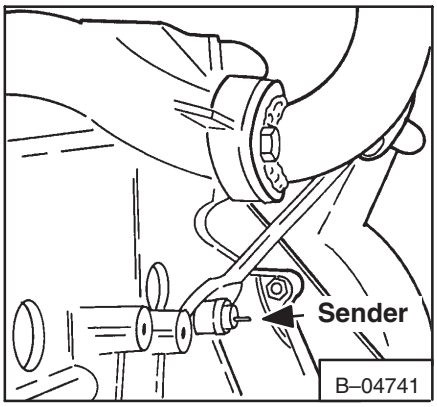

Fig. 7B–18 Removing Temp. Sender

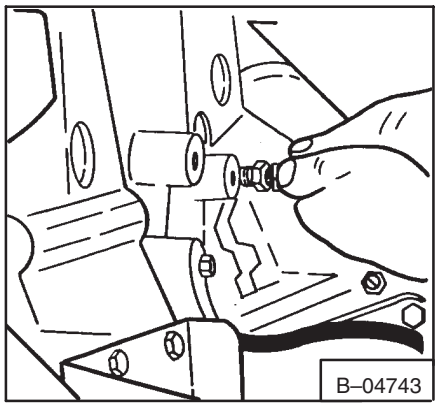

Fig. 7B–19 Installing Drain Fitting

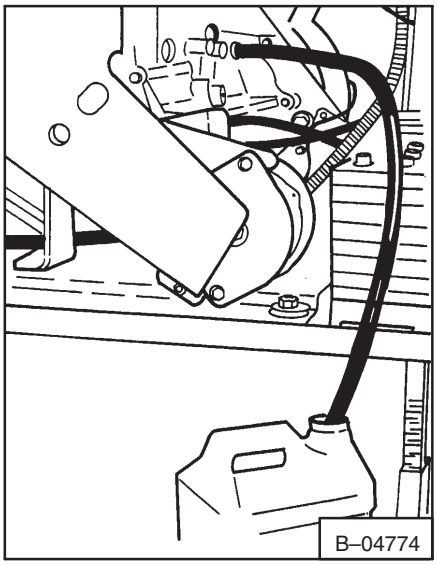

Fig. 7B–20 Removing Coolant

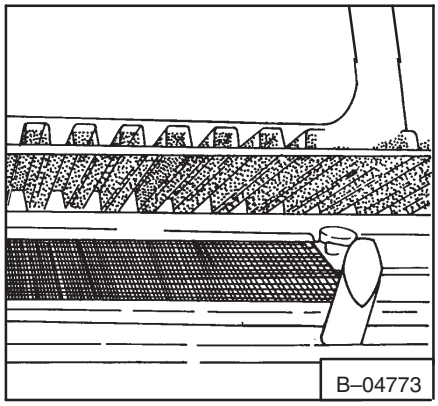

Fig. 7B–21 Removing The Grill

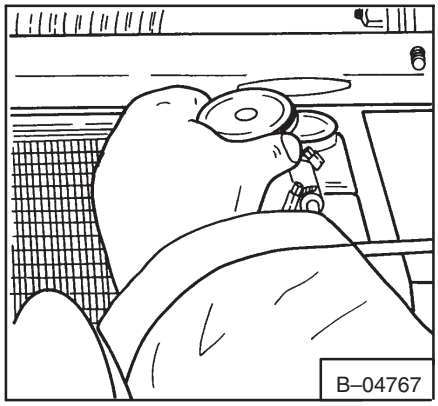

Fig. 7B–22 Removing The Radiator Cap

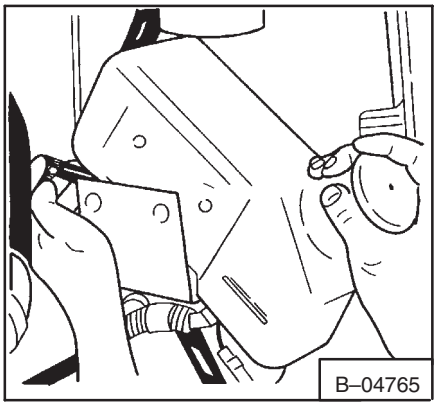

Fig. 7B–23 Removing Tank

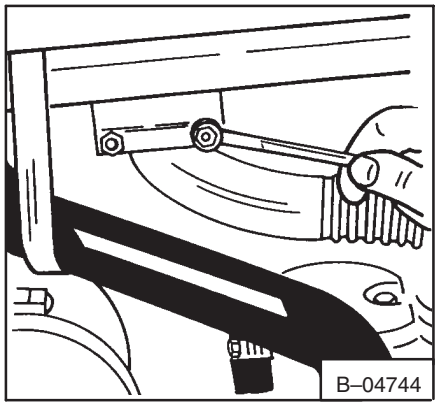

Fig. 7B–24 Removing Clamp

8. Remove the bolts from the manifold (Fig. 7B–25).

9. Remove the exhaust pipe from the muffler (Fig. 7B–26).

10. Remove the throttle rod from the governor linkage (Fig. 7B–27).

11. Remove the coil wire and remove the other wires (Fig. 7B–28) from the coil.

12. Remove the air cleaner hose from the engine (Fig. 7B–29).

13. Remove the coolant hoses from the engine.

14. Remove the solenoid from the recovery tank bracket (Fig. 7B–30).

15. Disconnect the fuel line from the engine.

16. Remove the engine ground cable (Fig. 7B–31).

17. Remove the engine mounting bolts (Fig. 7B–32).

18. Raise the operator guard (See Paragraph 5–1, Page 5–1).

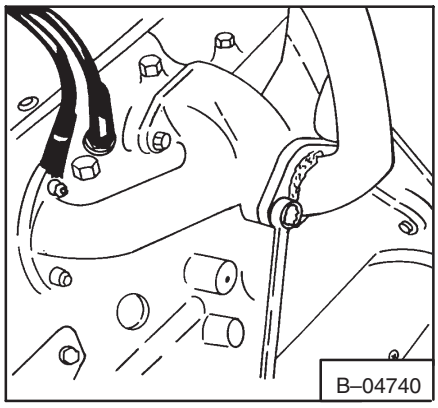

Fig. 7B–25 Removing Exhaust Pipe

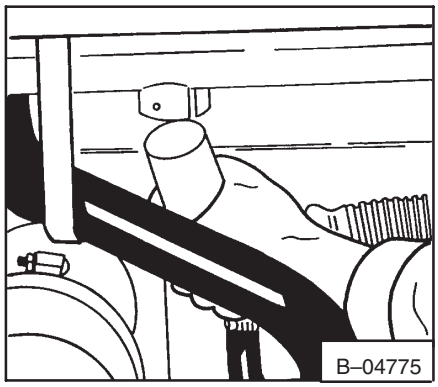

Fig. 7B–26 Removing Exhaust Pipe From Muffler

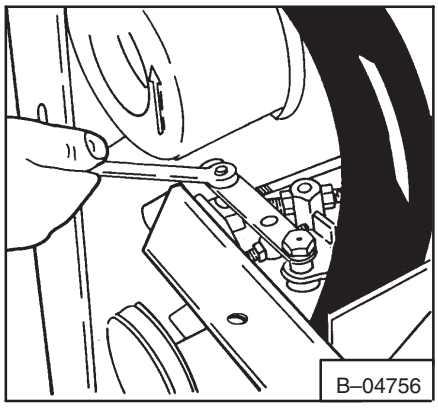

Fig. 7B–27 Removing The Throttle Rod

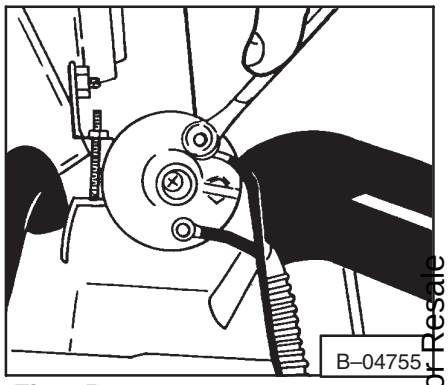

Fig. 7B–28 Removing The Wires From The Coil

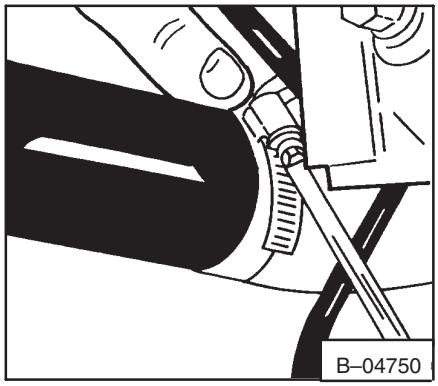

Fig. 7B–29 Removing The Air Cleaner Hose

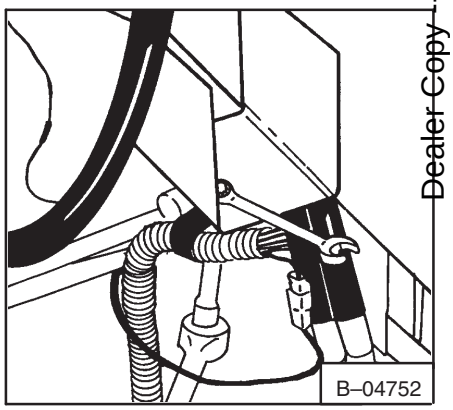

Fig. 7B–30 Removing The Solenoid

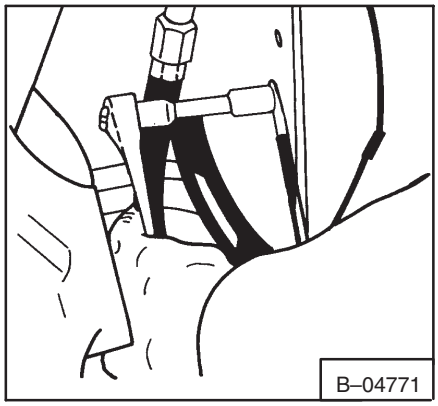

Fig. 7B–31 Removing The Engine Ground

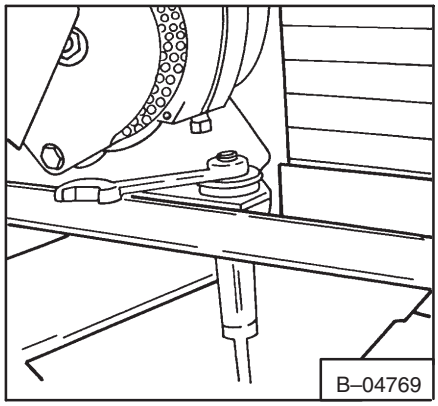

Fig. 7B–32 Removing The Eng. Mtg. Bolts

19. Disconnect the engine harness from the chassis harness (Fig. 7B–33).

20. Remove the choke control from the front panel (Fig. 7B–34) and put it in the engine compartment.

21. Remove any other items necessary.

22. Remove the engine using a table as shown in (Fig. 7B–35).

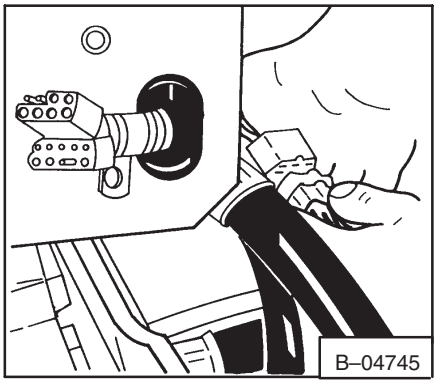

Fig. 7B–33 Disconnecting Engine Harness

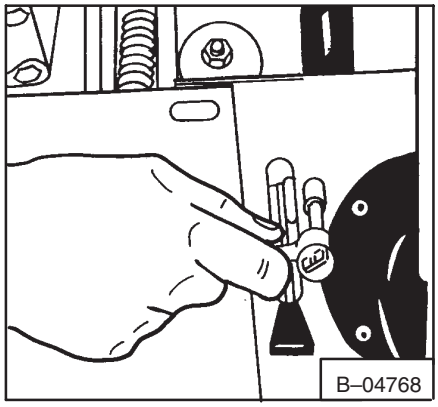

Fig. 7B–34 Removing Choke Control

7B– 6 ENGINE REPAIR

7B–6.2 Cylinder Head

Do not grind more than 0.010 inch (0,254 mm) from the cylinder head gasket surface. Remove all rough edges and scratches with an oil stone.

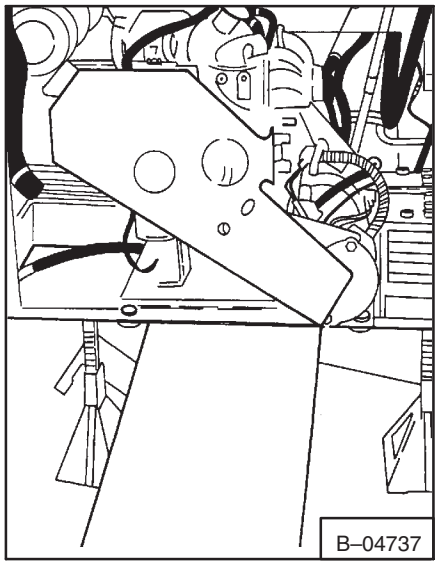

Fig. 7B–35 Removing The Engine

7B–6.2 Valve Guides

If the valve guides become worn, it will be necessary to install valves with an oversize stem.

Valves with oversize stems are available in the following oversize amounts:

0.003 inch 0.015 inch 0.030 inch

Use a reamer of the correct size to make valve guides larger.

When going from a standard size valve to an oversize valve, always use the reamer in steps. Grind the valve seat after the valve guide has been cut and use a sharp tool to break the sharp inside diameter corner at the top of the valve guide.

7B–6.3 Grinding The Valve Seats (Fig. 7B–36)

The valve seats are part of the cylinder head. If the valve seats become damaged so that the valves and seats are not in correct contact, grinding of the valve seats is necessary.

Grind both the intake and the exhaust valve seats at 45°. Grind only enough to give the valve seat a smooth surface.

Grind the valve seat the correct width (See Paragraph 8B–2.4, Page 8B–4). Use a 60° grinding wheel to remove the material from the bottom of the valve seat and a 30° grinding wheel for the top of the valve seat. The valve seat must be in contact at approximately the center of the valve surface.

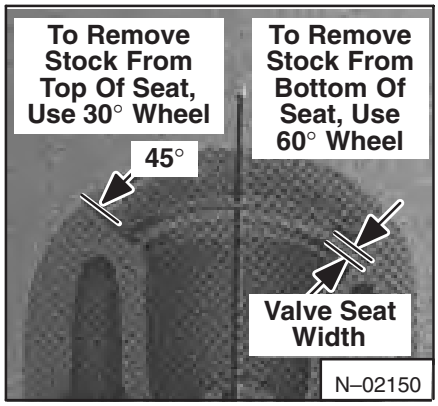

Fig. 7B–36 Grinding Valve Seat

7B–6.4 Valves

Small burns, grooves, etc., can be removed. Remove valves that are damaged, if the surface alignment cannot be corrected by finishing or if the valve stem clearance is more than specifications allow.

7B–6.5 Grinding Valves

If the valve surface alignment is not with in specifications grind the valve to a 45° angle. Remove only enough material to correct the alignment or to make the surfaces smooth. If the edge of the valve head is less than 0.03125 inch thick after grinding (Fig. 7B–35), install a new valve as the old valve will cause engine to run hot. Remove all grooves or scratches from the end of the valve stem, and make chamfer as needed. DO NOT remove more than 0.010 inch (0,245 mm) from the end of the valve stem.

If the valve or valve seat has been finished, it will be necessary to check the clearance between the rocker arm and the valve stem with the rocker assembly installed in the engine.

7B–6.6 Select Fitting Of The Valves

If the valve stem to valve guide clearance is more than the wear limit, use a reamer to cut the valve guide to the next oversize valve stem. Valves with oversize stem diameters of 0.003 inch, 0.015 inch and 0.030 inch are available as service parts. Grind the valve seat after the valve guide has been cut.

7B–6.7 Camshaft Repair

Remove small marks from the camshaft machined surfaces with a smooth oil stone.

7B–6.8 Crankshaft

Remove small marks with an oil stone. If the journals are damaged or worn, they must be machined to the correct size for the next size smaller bearing.

7B–6.9 Repairing Journals

After machining the bearing surfaces, put a chamfer in the oil holes, then finish the bearing surfaces with a No. 320 grit cloth and engine oil. Crocus cloth may also be used for finishing.

7B–6.10 To Check Crankshaft Or Connection Rod Bearings With Plastigage

1. Clean crankshaft bearing surfaces. Check the surfaces and thrust bearings for damage. When making replacement of standard size bearings, install bearing of minimum specified clearance. If the needed clearance cannot be made with a standard bearing use a 0.002 inch size smaller in combination with a standard bearing to get the correct clearance. (See Section 8 *TECHNICAL DATA*.)

2. Put a piece of plastigage on the bearing surface across the full width of the bearing cap and about 0.250 inch (6,35 mm) off center (Fig. 7B–37).

3. Install the cap and tighten the bolts to correct torque. DO NOT turn the crankshaft while Plastigage is in position.

4. Remove the cap. Using the Plastigage scale, check the width of plastigage at the widest point to get the minimum clearance. Check Plastigage at narrowest point to get maximum clearance. The difference between the readings is the taper of the bearing surfaces.

5. If the clearance is more than specified limits, on the connecting rod bearings, use a 0.002 inch size smaller bearing in combination with the standard bearings. Bearing clearance must be within specified limits. If 0.002 inch size smaller main bearings are used on more than one bearing surface, be sure they are installed in the cylinder block side of the bearing. If standard size and 0.002 inch smaller size bearings do not make clearance within the needed limits, machine the crankshaft bearing surface, and install the smaller size bearings.

6. After the bearing has been checked, remove Plastigage and put a small amount of oil on the bearing surface and the bearings. Install the bearing cap. Tighten the bearing caps bolts to the correct torque.

7. Do the above for all bearings that need replacement.

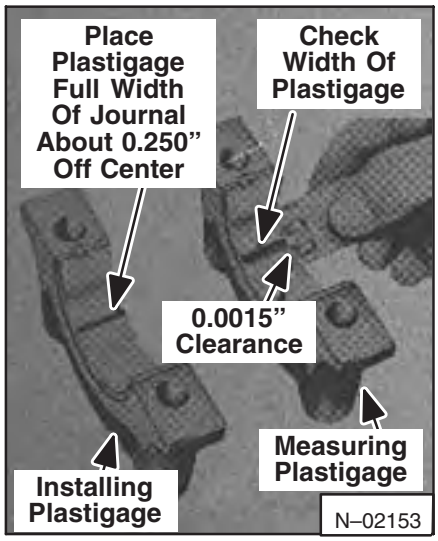

Fig. 7B–37 Installing Measuring Plastigage

7B–6.11 Installing Pistons

Pistons are available for service in standard sizes and over sizes.

The standard size pistons are color coded red or blue or have 0.0025 O.S. marked on the top. Refer to Section 8 *TECHNICAL DATA* for standard size piston dimensions.

Measure the piston diameter to be sure you have the specified clearance. When a new piston has been checked for clearance, mark the piston to the cylinder to which it was checked in. If the taper and piston to cylinder bore clearance conditions of the cylinder bore are within specified limits, new piston rings will give good service. If new rings are to be installed in a used cylinder that has not been finished, remove the cylinder wall glaze with a hone. Be sure to clean the cylinder bore after honing.

1. Find the correct size piston to be used by marking a cylinder bore check.

2. Find the correct size piston to give the correct clearance (Refer to Section 8 *TECHNICAL DATA*.) Measure the piston 2.250 inches (57,15 mm) below the top and at 90° to the piston pin bore.

3. Make sure the piston and cylinder block are at room temperature, 70 °F (21,1° C). After any finishing operation, let the cylinder bore cool and be sure the piston and the bore are clean and dry before the piston fit is checked.

7B–6.12 Installing Piston Rings

The piston uses two compression rings and one oil control ring. The lower compression ring is stepped on the bottom outer edge and the upper ring is chrome plated and tapered on the outside diameter. Both rings are marked top and must be installed correctly. The upper ring, when new, has a red and brown compound on the outer edge. This compound must not be removed. The oil control rings have narrow ring cases and can be installed either way.

1. Use the correct size ring for the size of cylinder bore you have.
2. Put the ring in the cylinder bore it is going to be used in.
3. Use the head of a piston to push the ring in the bore about 1.0 inch (25,4 mm) so that the ring is square with the cylinder wall. Be careful not to damage the ring or the cylinder bore.
4. Measure the gap between the ends of the rings with a feeler gauge (Fig. 7B–38). If the ring gap is not in the specified limits, use another ring set.
5. Check the side clearance of the compression rings with a feeler gauge installed between the ring and its lower edge (Fig. 7B–39). The gauge must move easily around the ring circumference. If the grooves are worn, make replacement of the piston.

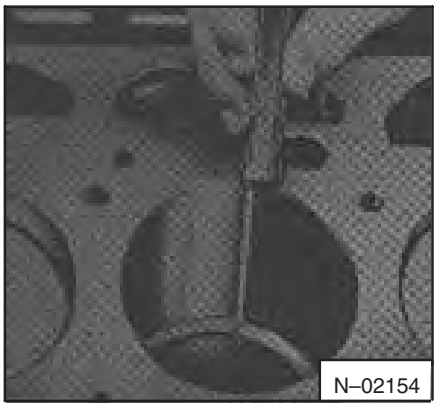

Fig. 7B–38 Checking Gap Of Piston

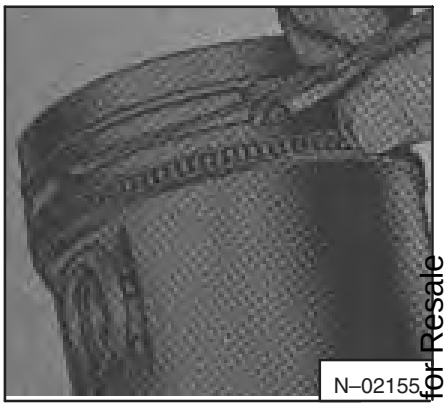

Fig. 7B–39 Checking Side Clearance

7B–6.13 Installing The Piston Pins

Pistons and piston pins are available as a unit only and cannot be purchased as individual parts. Keep the correct pins and pistons together.

7B–6.14 Valve Rocker Arm And Shaft Assembly

Use a hone to remove small surface damage to the rocker arm shaft and to the rocker arm bore.

If the valve end of the rocker arm has a grooved radius replace the rocker arm. You cannot grind this surface.

7B–6.15 Push Rods

Make sure the push rods are straight.

If the push rod is not in specification replace the push rod.

7B–7 CYLINDER BLOCK

7B–7.1 Finishing The Cylinder Walls

Before any cylinder is machined all main bearing caps must be in position and tightened to the correct torque. Finish only the cylinder or cylinders that need to be finished. All pistons are the same weight, both standard and oversize; and various sizes of pistons can be used without changing the engine balance. Finish the cylinder with the most wear first to find the maximum oversize.

Finish the cylinder to within 0.0015 inch (0,038 mm) of the oversize diameter. This will leave enough material for the final step of honing for correct surface finish and pattern. Use a motor driven hone with spring pressure. Use an RPM of 300–400 and grit sizes 180–200. Use a lubricate mixture of equal parts of kerosene and SAE No. 20 motor oil.

7B–8 CYLINDER HEADS

7B–8.1 Cleaning The Cylinder Heads

With the valves installed to protect the valve seats, remove deposits from the combustion chambers and valve heads with a scraper and a wire brush. Be careful not to damage the cylinder head gasket surface. Remove the valves and clean the valve guide cleaning tool. Use cleaning solvent to remove grease and other debris. Clean all the bolt holes. Remove all the deposits from the valves with a fine wire brush or buffing wheel.

7B–8.2 Checking The Cylinder Heads

Check the cylinder head for cracks and check the gasket surface for debris and scratches.

When a cylinder head is removed because of gasket leaks, check the flat area of the cylinder head gasket surface for correct specifications. If necessary to finish the cylinder head gasket surface, do not machine off more than 0.010 inch (0,254 mm).

Check the valve seat with a gauge. If the wear is more than specifications allow, grind the valve and valve seat. Measure the valve seat width. Grind the valve seat when the width is not in specification.

Check the valve surface and the edge of the valve head for damage. Check the stem for damage and the end of the valve stem for wear.

Check the valve stem to valve guide clearance of each valve in its correct valve guide.

Check the springs for the correct pressure at the specified spring lengths. Use tool (P/N 6513–DD). Replace any springs not in specifications.

Check each spring for being round, using a steel square and a flat surface. Put the spring and square on end on the flat surface. Move the spring up to the square. Turn the spring and check the space between the top coil of the spring and the square. The out of round limits are 0.078 inch (1,98 mm).

Follow the same procedure to check new valve springs before installation. Be sure the correct spring is installed. The springs are color coded.

7B–9 TAPPETS

7B–9.1 Cleaning The Tappets

Clean the tappets in cleaning solvent and wipe the tappets with a clean lint free cloth.

7B–9.2 Checking The Tappets

Check the tappets for wear or damage. Check the bottom end of the tappet to make sure that it has a small amount of convex. Replace tappets that are damaged, worn, or if the bottom is not smooth. If the bottom surface is worn flat, it can be used with the original camshaft only.

7B–10 CAMSHAFT

7B–10.1 Cleaning And Checking The Camshaft

Clean the camshaft in solvent and wipe it dry . Check the camshaft lobes for damage and wear. The camshaft does not need replacement unless the lobe lift is worn more than 0.005 inch (0,127 mm).

The lift of the camshaft lobes can get checked with the camshaft installed in the engine or on the centers. Make reference to 7B–4 *CAMSHAFT LOBE LIFT*.

7B–11 CRANKSHAFT

7B–11.1 Checking The Crankshaft

Measure the diameter of each journal in at least four locations to look for out of round taper or smaller size conditions.

7B–12 FLYWHEEL

7B–12.1 Checking The Flywheel

Check the flywheel for cracks, or other damage.

Check the ring gear for wear and damage to the teeth. If the teeth have damage, install a new ring gear.

With the flywheel installed on the crankshaft, check the flywheel surface alignment.

7B–13 CONNECTING RODS

7B–13.1 Cleaning The Connecting Rods

Remove the bearings from the rod and cap. Mark the bearings for identification if you are to use them again. Clean the connecting rods in solvent, including the rod bore and under the bearings. Clean all passages with compressed air using a low air pressure.

7B–13.2 Checking The Connecting Rods

Check the connecting rod bearing bores for out of round and taper . Check the inside diameter of the connecting rod piston pin bore. If the pin bore in the connecting rod is larger than the specification, install a 0.002 inch oversize piston pin. First fit the oversize piston pin to the piston pin bore by using a reamer tool. Then assemble the piston, the piston pin and the connecting rod.

7B–14 PISTONS, PINS AND RINGS

7B–14.1 Cleaning The Pistons, Pins and Rings

Remove debris from the piston surfaces. Clean debris from the piston skirt, piston pins and rings with solvent.

Clean the ring grooves with a ring groove cleaner. Make sure the oil ring slots are clean.

7B–14.2 Checking The Pistons, Pins And Rings

Replace the pistons that show signs of over maximum wear or damage.

Check the piston to cylinder bore clearance by measuring the piston and bore diameters. Refer to 7B–7 *CYLINDER BLOCK* for the bore measurement procedure. Measure the outside diameter of the piston with micrometers about 2.250 inches (57,15 mm) below the dome and at 90° to the piston pin bore. Check the ring side clearance. (See Section 7B–6.11 *INSTALLING PISTON RINGS*.)

Check the outside diameter of the piston pin and the inside diameter of the pin bore in the piston. Make replacement of any piston pin or piston that is not in specification.

Replace all rings that have damage. Check the end gap and the side clearance. Rings must not be moved from one piston and installed on another.

7B–15 MAIN BEARING AND CONNECTING ROD BEARINGS

NOTE: Main bearings have color codes to identify size. See Section 8 *TECHNICAL DATA*.

7B–15.1 Cleaning Bearings

Clean the bearing inserts and caps in solvent and dry them with compressed air. Do not remove deposits from the bearing shells.

7B–15.2 Checking Bearings

Check each bearing carefully. Bearings that have damage or excessive wear need replacement. Check the clearance of bearings that look good with Plastigage (See Paragraph 7B–6.10 *MAIN AND CONNECTING ROD BEARINGS*).

7B–16 CYLINDER BLOCK

7B–16.1 Cleaning The Cylinder Block

After any cylinder bore repair operation clean the bore with soap and water. Then rinse the bore with clean water to remove the soap and wipe the bore with a clean cloth with engine oil on it.

If the engine is disassembled clean the block with solvent. Remove old gasket material from all machined surfaces. Remove all pipe plugs that seal oil passages and clean all the passages. Clean all passages, bolt holes, etc. with compressed air. Make sure the threads in the cylinder head bolt holes are clean.

Use a tap to clean the threads and to remove any debris. Clean the groove in the crankshaft bearing and bearing retainers.

7B–16.2 Checking The Cylinder

Check the cylinder walls for damage and wear Check the cylinder bore for out of round and taper. Measure the diameter of each cylinder bore at the top, center and bottom with the gauge positioned at the right angles and parallel to the centerline of the engine. Use only the measurement at 90° to the engine centerline when calculating the piston to cylinder bore clearance.

Machine the cylinder that are damaged or when out of round or taper is more than the wear limits allow.

7B–17 OIL PUMP

7B–17.1 Cleaning The Oil Pump

Wash all parts in a solvent and dry them with compressed air. Use a brush to clean the inside of the pump housing and the pressure relief valve chamber. Be sure all dirt and metal particles are removed.

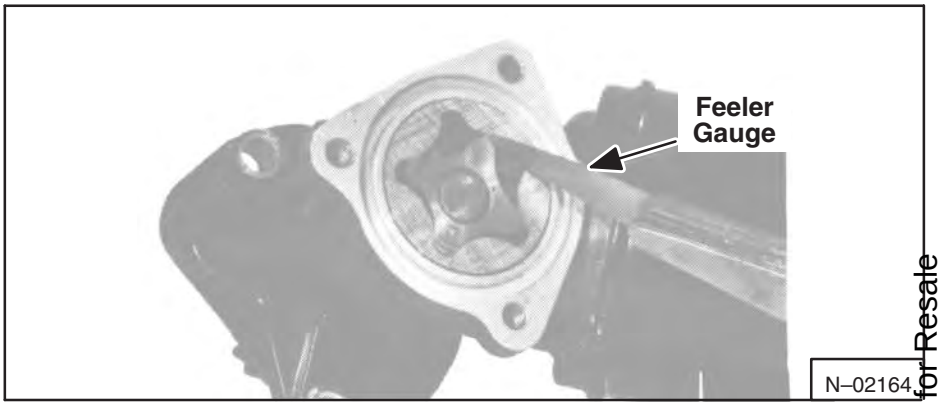

Fig. 7B–40 Checking The Outer Race To Housing Clearance

7B–17.2 Checking The Oil Pump

Check the inside of the pump housing and the outer race and rotor for damage or wear.

Measure the outer race to housing clearance (Fig. 7B–40). Check the clearance between the outer race and the rotor lobes (Fig. 7B–41).

With the rotor assembly installed in the housing. Put a straight edge over the rotor assembly and the housing. Measure the clearance (rotor end play) between the straight edge and the rotor (Fig. 7B–42). The outer race, shaft and rotor can be replaced only as an assembly. Check the drive shaft to housing bearing clearance by measuring the outside diameter of the shaft and the inside diameter of the housing bearing. Check the relief valve spring tension.

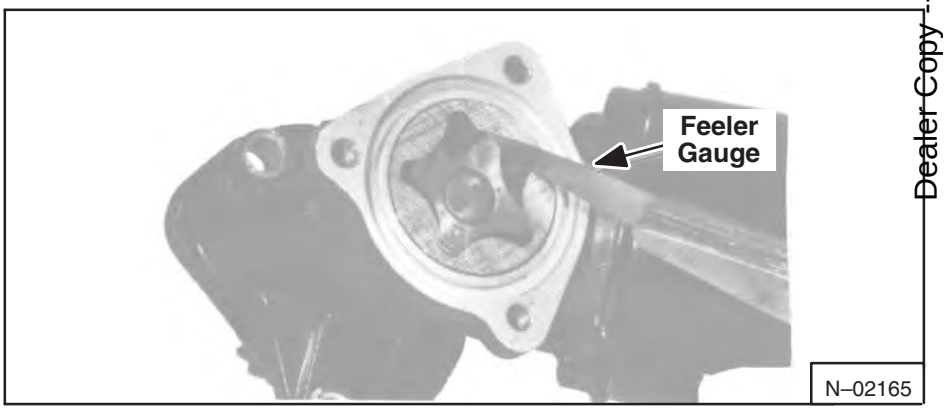

Fig. 7B–41 Checking Rotor Lobes To Race Clearance

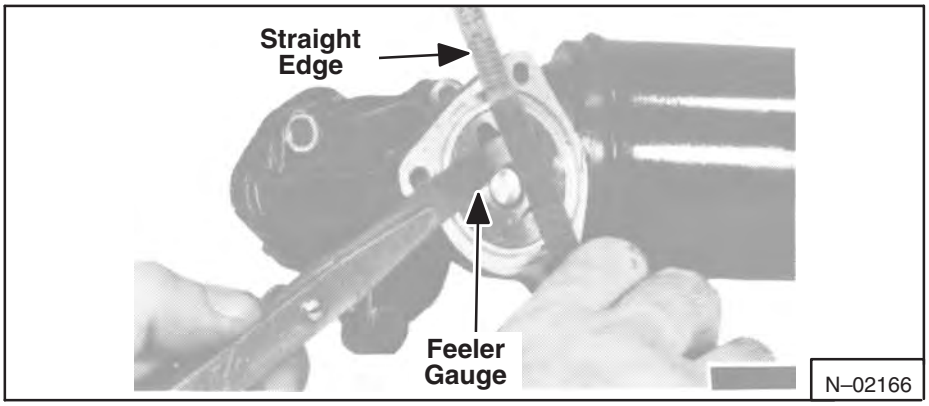

Fig. 7B–42 Checking Rotor End Play

If the spring tension is not within specifications and the spring is worn or has damage, install a new spring. Check the relief valve piston for damage and free movement in the bore.

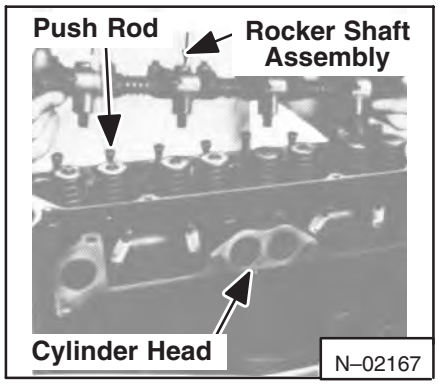

Fig. 7B–43 Removing Rocker Arm Assembly

7B–18 VALVE ROCKER ARM COVER AND ROCKER ARM SHAFT

7B–18.1 Removing And Disassembly Of The Rocker Arm Shaft

1. Disconnect the spark plug wires and remove them from the fastener on top of the rocker cover.
2. Remove the rocker cover fastening screws. Remove the rocker cover and the gaskets.
3. Remove the rocker arm shaft attaching bolts evenly and lift the rocker arm shaft assembly (Fig. 7B–43).
4. Remove the cotter pin from one end of the shaft and pull the flat washer, the crimped washer and the second flat washer from the shaft. The rocker arm shaft supports, the rocker ams and the springs can be removed from the shaft.
5. Remove the plugs from the rocker shaft ends by drilling a hole in one plug. Install a long rod through the drilled plug and hit the other plug out of the shaft. Remove the drilled plug using the same method.
6. Clean the component parts of the shaft assembly in cleaning solvent.

7B–18.2 Installing Rocker Arm Shaft

1. Put new plugs in the ends of the rocker shaft.
2. Assemble the rocker shaft. The bolt hole in the rocker shaft support must be on the same side as the adjustment screw in the rocker shaft. The rocker arms are right and left hand, the rocker pads are angled towards the support. Install the cotter pins with the heads up and bend the legs apart.
3. Put oil on the valve stem tips, rocker arm pads and the pushrod ends. Install the rocker shaft assembly on the cylinder head and put the pushrods on the adjustment screws. Install and tighten the bolts evenly. (See Section 8 for Torque Specifications.)
4. Make adjustment of the valve clearance to specifications.
5. Remove the old gasket material from the contacting surfaces.
6. Put the rocker cover and gasket on the cylinder head and fasten with the screws. Tighten the screws to the correct torque specifications. (See Section 8.)
7. Put the spark plug wires in the rocker cover fastener and connect them to the correct spark plug.

7B–19 VALVE PUSHRODS

7B–19.1 Removing The Valve Pushrods

1. Remove the rocker shaft bolts evenly and lift of f the rocker arm shaft assembly.

2. Remove the pushrods and keep them in the correct order.

7B–19.2 Installing The Valve Pushrods

1. Put oil on both ends of the pushrods and install them in the correct bores.

2. Put oil on the valve stem and the rocker arm pads, and install the rocker arm shaft assembly on the cylinder head. Put the pushrods on the adjustment screws. Tighten the bolts 25–30 ft.–lbs. (34–41 Nm) torque.

3. Make adjustment of the valve lifters according to the specifications.

7B–20 INTAKE MANIFOLD

7B–20.1 Removing The Intake Manifold

1. Remove the coolant from the cooling system.

2. Disconnect the throttle linkage from the throttle lever on the carburetor.

3. Disconnect the fuel line from the carburetor.

4. Disconnect the water hose from the intake manifold.

5. Remove the intake manifold.

7B–20.2 Installing The Intake Manifold

1. Put a water resistant sealer to both sides of the new gasket and around the water port. Install it on the cylinder head.

2. Install the intake manifold and tighten the nuts and bolts evenly 15–18 ft.–lbs (20–24 Nm) torque.

3. Connect the water hose to the intake manifold.

4. Connect the fuel line to the carburetor.

5. Connect the throttle linkage

6. Install the dipstick tube bracket to the intake manifold and install the fastening bolt.

7. Fill the cooling system with the correct coolant.

8. If a new manifold is to be installed, put all the needed parts on the new manifold.

7B– 21 CYLINDER HEAD

7B–21.1 Removing The Cylinder Head

1. Remove the air cleaner hose from the carburetor.
2. Disconnect the fuel line from the carburetor.
3. Remove the coolant from the cooling system.
4. Disconnect the spark plug wires, remove them from the fastener on the rocker cover.
5. Disconnect the water outlet hose at the intake manifold.
6. Remove the muffler from the manifold.
7. Disconnect the throttle linkage, the choke cable and the distributor vacuum advance hose from the carburetor.
8. Disconnect the throttle linkage at the governor.
9. Remove the governor mounting bracket.
10. Remove the thermostat housing and remove the thermostat.
11. Remove the rocker cover and the gasket.
12. Remove the rocker shaft bolts evenly and lift off the rocker shaft assembly.
13. Lift out the pushrods and keep them in the correct order.
14. Remove the cylinder head bolts and lift off the cylinder head and gasket. Do not put the cylinder head flat on its contact surface. Damage to the spark plugs or gasket surface can result.

7B–21.2 Installing The Cylinder Head

1. Clean all the gasket material from the contact surfaces and put the cylinder head gasket on the cylinder block using the pilot studs.
2. Install the cylinder head, remove the pilot studs and install the cylinder head bolts. Tighten the bolts evenly (Fig. 7B–44) and in three steps, to the correct torque specifications.
3. Put oil on both ends of the pushrods and install the pushrods in the correct bores.
4. Install the rocker arm shaft assembly on the cylinder head. Put the pushrods on the adjustment screws. Tighten the bolts 25–30 ft.–lbs. (34–41 Nm) torque.
5. Make adjustment of the valve clearances.
6. Install the muffler onto the manifold.

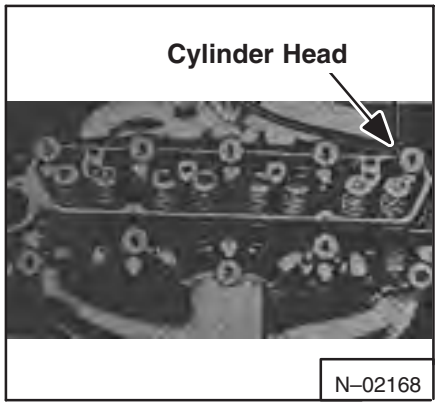

Fig. 7B–44 Tightening Bolts In Cyl. Head

7. Connect the distributor vacuum advance hose, the throttle linkage and choke cable to the carburetor.

8. Connect the water outlet hose to the intake manifold.

9. Install the thermostat in the cylinder head and install the gasket and thermostat housing.

10. Fill the cooling system with coolant.

11. Install governor and mounting bracket to cylinder head and install the bolts.

12. Loosen the governor adjustment bolts and install the belt on the governor sheave. Make adjustment of the belt to the specification and tighten the bolts.

13. Connect the throttle linkage to the governor.

14. Connect the ignition wires to the spark plugs in the correct firing order.

15. Make a second adjustment of the valve clearances to specification.

16. Install the rocker arm cover.

17. Install the air cleaner hose to the carburetor.

18. Make adjustment of the carburetor idle speed and mixture setting.

19. Make adjustment to the governor.

7B–22 VALVE SPRING, RETAINER AND STEM SEAL (With The Cylinder Head Removed)

7B–22.1 Removing The Valve Spring

1. Remove the muffler from the manifold and remove the spark plugs.

2. Compress the valve spring with a valve spring compressor and remove the keepers, rotators, spring retainer.

3. Remove the seal and remove the valve.

7B–22.2 Installing The Valve Spring

1. Install the valve and a new valve stem seal.

2. Install the valve spring and the retainer over the valve stem.

3. Compress the valve spring. Install the rotator on the exhaust valve. Put the retainer locks in the valve stem grooves and releasethe spring compressor to engage the locks in the retainer tappets.

7B–23 VALVE SPRING, RETAINER AND STEM SEAL (With The Cylinder Head Installed)

1. Disconnect the spark plug wires and remove them from the fastener on the rocker cover.

2. Remove the rocker cover and the gasket.

3. Remove the rocker shaft bolts evenly and remove the rocker shaft assembly

4. Remove the pushrods and keep them in the correct order.

5. Remove the spark plugs.

6. Use an adapter to connect air pressure hose to the cylinder to keep the valve closed.

WARNING

Be sure piston is at top dead center or bottom dead center before applying air pressure. If not the engine can turn and cause injury.

W–2264–0897

7. Compress the valve spring, and remove the valve spring retainer locks. Release the spring compressor, remove the valve spring, rotator, retainer and the valve stem oil seal.

7B–23.2 Installing The Valve Spring

1. Install a new seal over the valve stem.

2. Install the valve spring and retainer on the valve stem.

3. Compress the valve spring. Put the valve spring retainer locks in the valve stem grooves and release the spring at a slow rate to engage the locks in the retainer. Remove the air hose and adaptor.

4. Put oil on both ends of the pushrods and install the pushrods in the correct bores. Install the rocker shaft assembly to the cylinder head, put the pushrods on the adjustment screws. Tighten the bolts evenly to specifications.

5. Make adjustment of the valve clearances to specification.

6. Install the rocker cover.

7. Install the spark plugs and connect the wires to the spark plugs in the correct firing order.

8. Start the engine and run the engine until the engine is at normal operating temperature.

9. Disconnect the wires from the spark plugs and remove the rocker cover.

10. Make a second adjustment of the valve clearances (hot) to specifications.

11. Install the rocker cover with a new gasket and tighten the fastening screws to specification.

12. Put the spark plug wires in the rocker cover fastener and connect them to the correct spark plugs.

7B–24 WATER PUMP

7B–24.1 Removing The Water Pump

1. Remove the coolant from the cooling system.
2. If a new water pump is being installed, move the water hose connection to the new water pump.
3. Put the water pump and the gasket on the cylinder block and fasten with the bolts.
4. Connect the manifold water hose the water pump and tighten the clamp.
5. Connect the lower hose on the water pump and tighten the clamp.
6. Install the sheave and the fan. Install the bolts and tighten to the correct torque specification.
7. Install the drive belt over the crankshaft, fan and governor sheave and make adjustment of the belt tension to specifications. Tighten the governor fasten fastening and adjusting bolt to specifications.
8. Adjust the governor.
9. Fill the radiator and install the radiator cap. Start the engine and check for leaks.

7B–25 CYLINDER FRONT COVER, TIMING CHAIN AND CRANKSHAFT SPROCKETS

7B–25.1 Removal

1. Remove the engine coolant by opening the drain valve on the radiator and removing the drain plug in the cylinder block.
2. Disconnect the radiator hoses from the engine.
3. Remove the governor belt and remove the water pump sheave.
4. Remove the water pump.
5. Remove the crankshaft sheave, using a puller.
6. Remove the four bolts that hold the oil pan to the timing chain cover. Remove the six bolts that hold the timing cover to the cylinder block.

NOTE: Be careful not to cause damage to the oil pan gasket. If the gasket becomes damaged it will be necessary to remove the oil pan and replace the gasket. A damaged gasket will cause an oil leak.

7B–25.2 Removing The Timing Cover

7. Remove the crankshaft oil thrower. Remove the crankshaft sprocket retainer and the bolts.

8. Remove the timing chain tightening arm. Remove the camshaft sprocket and disconnect the timing chain.

9. Use a puller to remove the crankshaft sheave (Fig. 7B–45).

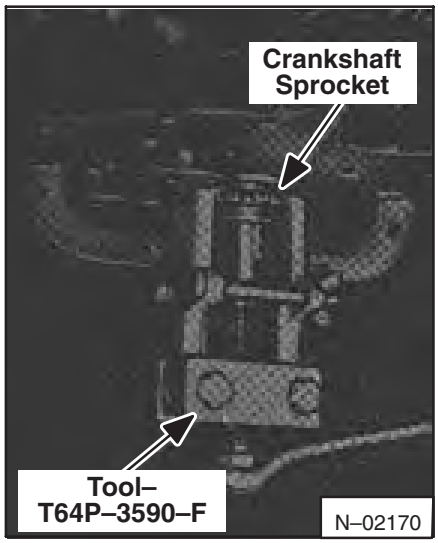

Fig. 7B–45 Removing Crankshaft Sprocket

7B–25.3 Installation Of The Timing Cover

1. Install the crankshaft sprocket if removed (Fig. 7B–46).

2. Install the camshaft sprocket.

3. Install the timing chain over the camshaft and crankshaft sprockets so the timing marks are in alignment (Fig. 7B–47).

4. Install the camshaft sprocket retainer and the bolts, then tighten the bolts to specification. Bend the locking tabs.

5. Install the tightening arm on the pivot pin while holding the tightening the cam in the released position.

6. Install the oil thrower on the crankshaft. Install the timing chain tightener.

7. Install the timing cover gasket, the oil pan gasket (if needed) and the end seal on the front cover with an oil resistant sealer at the ends. Make alignment of the cover (Fig. 7B–48) with the tool. Tighten the fastening bolts evenly to specification and remove the alignment tool. Tighten the oil pan bolts to specification.

8. Install the crankshaft sheave, making alignment of the slot with the crankshaft key. Tighten the fastening bolt to specifications.

9. Install the water pump and tighten the fastening bolts to specification.

10. Install the water pump sheave. Install the governor belt and make adjustment of the tension of the belt to specifications.

11. Install the radiator hoses and tighten the clamps.

12. Fill the radiator with coolant.

13. Start the engine and check for oil and water leaks.

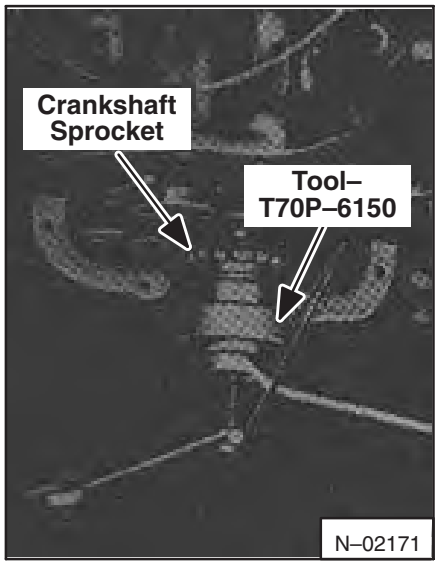

Fig. 7B–46 Installing Crankshaft Sprocket

7B–26 FRONT OIL SEAL

7B–26.1 Removing The Front Oil Seal

1. Remove the timing cover.

2. Push the seal out from the inside of the cover.

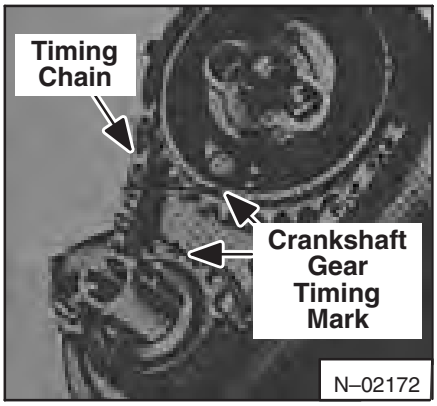

Fig. 7B–47 Timing Marks

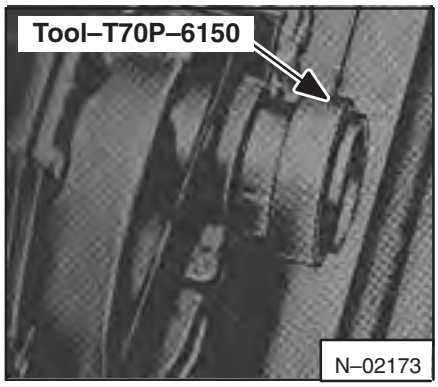

Fig. 7B–48 Aligning Oil Seal In Front Cover

7B–26 FRONT OIL SEAL

7B–26.1 Removing The Oil Seal

1. Remove the timing cover.
2. Push the seal out from the inside of the cover.

7B–26.2 Installing The Oil Seal

1. Push the new seal into the housing (Fig. 7B–49). Put a support under the housing near the seal to keep housing from breaking.
2. When installing the cover it is important that the oil seal is in alignment with the crankshaft and sheave boss.

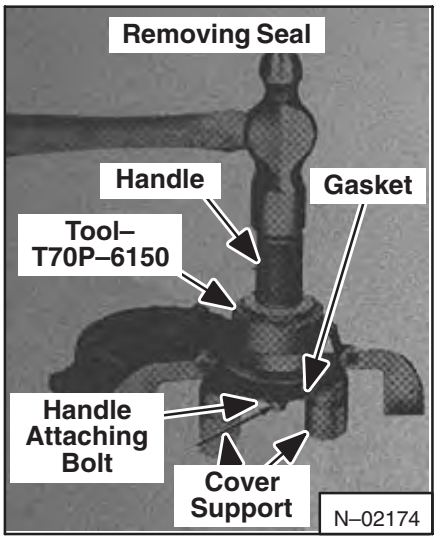

Fig. 7B–49 Installing OIl Seal In Front Cover

7B–27 TIMING CHAIN TIGHTENING

7B–27.1 Removing The Chain Tightener

1. Remove the timing chain cover (and oil pan if necessary).
2. Remove the timing chain tightener and arm by removing the two fastening bolts (Fig. 7B–50).

7B–27.2 Installing The Chain Tightener

1. Install the tightener arm on the pivot pin.
2. Install the tightener and install the two bolts.
3. Install the timing chain cover (and oil pan if necessary).

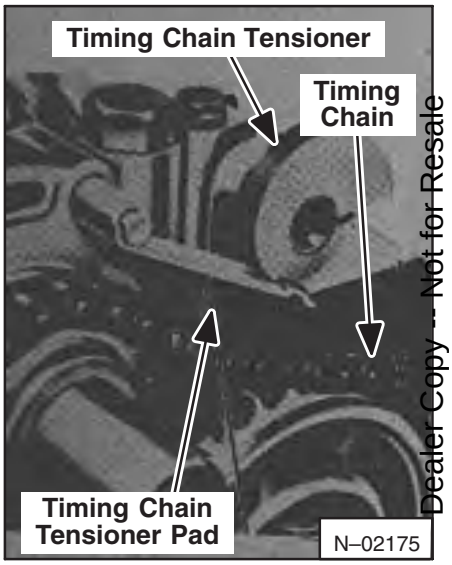

Fig. 7B–50 Tightening For Timing Chain

7B–28 CAMSHAFT AND VALVE LIFTERS

7B–28.1 Removing The Camshaft And Valve Lifters

1. Remove the engine assembly and put the engine on a stand. Remove the crankcase oil.
2. Disconnect the fuel line at the fuel pump.
3. Loosen the governor adjustment bolts and remove the belt.
4. Remove the water pump sheave.
5. Remove the oil and fuel pumps from the cylinder block.
6. Disconnect the spark plug wires from the spark plugs and remove the rocker cover. Clean all gasket material from the rocker arm cover and cylinder head.
7. Remove the distributor from the cylinder block.
8. Remove the rocker shaft bolts evenly and lift off the rocker shaft.

9. Remove the pushrods from the cylinder block and keep them in the correct order.

10. Turn the complete engine over on the stand and remove the oil pan and the gaskets.

11. Remove the crankshaft sheave, the timing cover and the oil thrower.

12. Remove the timing chain tightener assembly.

13. Remove the camshaft sprocket and the timing chain.

14. Remove the camshaft thrust plate and remove the camshaft (Fig. 7B–51).

15. Remove the tappets from the cylinder block and keep them in the correct order.

7B–28.2 Installing The Camshaft And Valve Lifters

1. Install a new timing cover oil seal (Fig. 7B–49).

2. Install the tappets.

3. Install the camshaft and install the thrust plate in the camshaft groove. Tighten the fastening assembly bolts to specification and bend the locking tabs.

4. Check the camshaft end play.

5. Put the timing chain on both sprockets. (Be sure marks on the sprockets are in alignment.) Install the sprockets on the crankshaft and the camshaft then tighten the bolts to specification and bend the locking tabs.

6. Find the tightener arm on the pivot pin and install the timing chain tightener.

7. Install the oil thrower on the crankshaft.

8. Put the gasket on the timing cover with an oil sealer at the end. Make alignment of the front cover and tighten the bolts evenly to specification.

9. Put a new gasket on the block flange using an oil resistant sealer compound at each end. Put the end seals (chamfered ends) into the groove, again using an oil resistant sealer at the ends and install the oil pan. Tighten the oil pan bolts (Fig. 7B–52) 6–8 ft.–lbs. (8–1 Nm) torque. First tighten according to alphabetical order (A–B–C etc.) then tighten according to numerical order (1–2–3).

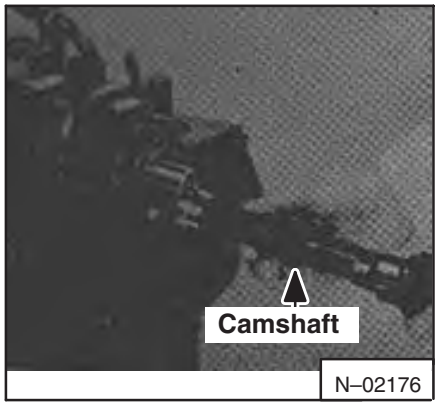

Fig. 7B–51 Removing The Camshaft

10. Install the dipstick.

11. Install the crankshaft sheave, making alignment of the slot with the crankshaft key. Tighten the sheave fastening bolt to specification.

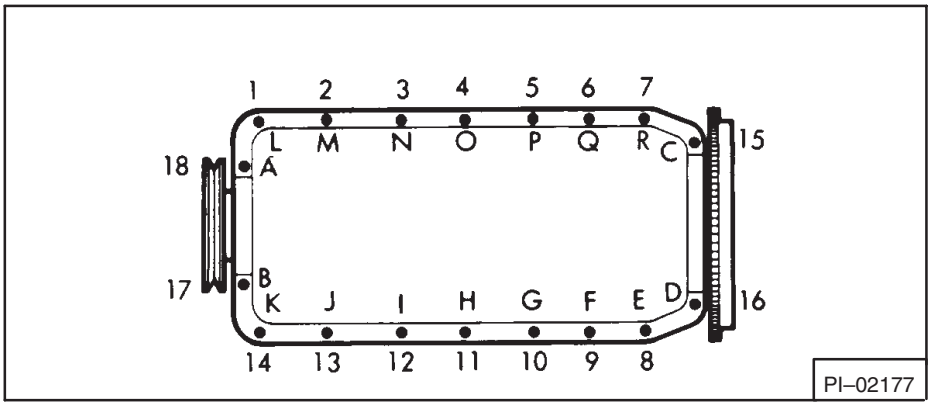

Fig. 7B–52 Oil Pan Tightening Sequence

12. Turn the engine over on the stand. Install the distributor and make the timing adjustment.

13. Install a new gasket on the oil pump mounting flange and install the oil pump and the filter assembly. Tighten the fastening bolt to specification.

14. Install a new gasket on the fuel pump flange and install the pump lever through the slot in the block so that the lever is on the lobe of the camshaft. Fasten the fuel pump to cylinder block with the two washers and bolts. Tighten the bolts evenly to specifications.

15. Put oil on the contact surfaces of the pushrods, valve stems and rocker arms. Install the pushrods in the correct bores and install the rocker shaft assembly. Be sure to put the end of the pushrods on the adjustment screws. Tighten the rocker shaft fastening bolts evenly to specification.

16. Make adjustment of the valve clearance (See Section 8 *TECHNICAL DATA*).

17. Connect the distributor vacuum advance line to the carburetor.

18. Install the water pump sheave. Install the drive belt on the sheave and make adjustment of the belt tension to specifications. Connect the fuel line from the carburetor to the fuel pump.

19. Install distributor cap and connect the wires to the spark plugs.

20. Remove the engine from the stand.

21. Install the engine assembly in the Bobcat loader.

22. Start the engine and check for oil and water leaks.

23. Make a second adjustment of the valve clearances (hot) to specifications.

24. Install the rocker cover and install a new gasket and fasten with screws. Tighten to specifications.

25. Start the engine and make adjustment of the ignition timing if needed.

26. Make adjustment of the carburetor idle speed and fuel air mixture to specifications.

7B–29 OIL PAN

7B–29.1 Removing The Oil Pan

1. Remove the crankcase oil.

2. Remove the dipstick.

3. Remove the three bolts and remove the starter (See Paragraph 7B–43.1 Page 7B–39).

4. Remove the oil pan fastening bolts and remove the pan and the gasket.

7B–29.3 Installing The Oil Pan

1. Clean the oil pump inlet tube and the screen assembly.

2. Clean the gasket surfaces of the block and the oil pan. Be sure to clean the seal grooves in the timing chain cover and the rear seal retainer. The oil pan has a two piece gasket. Put sealing compound on the block surface and the oil pan gasket surface. Install the oil pan and tighten the bolts evenly to specifications following first the alphabetical, then the numerical steps shown in (Fig. 7B–52).

3. Clean and install the starter and fasten it with three bolts.

4. Fill the oil pan with the correct engine oil and install the dipstick.

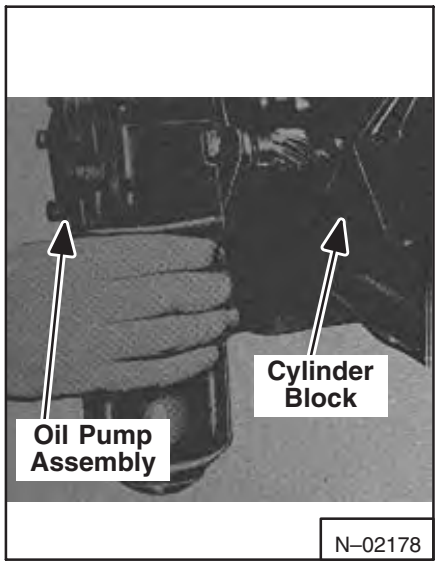

Fig. 7B–53 Removing Oil Pump

7B–30 OIL PUMP

The oil pump and filter assembly is installed on the left side of the cylinder block and can be removed with the engine in the machine.

7B–30.1 Removing The Oil Pump

1. Put a pan under the oil pump.

2. Remove the three bolts that hold the oil pump and filter assembly and remove the assembly (Fig. 7B–53).

3. Remove the oil filter from the oil pump.

7B–30.2 Installing The Oil Pump

1. Install the new oil filter on the oil pump assembly.

2. Make sure the contact surfaces are clean of the old gasket material, then install the oil pump and the filter assembly on the cylinder block, using a new gasket with sealing compound and fasten with the three bolts. Tighten the bolts to specification.

3. Check the oil level and add oil if needed.

7B–31 CRANKSHAFT REAR OIL SEAL

7B–31.1 Removing The Rear Oil Seal

1. Remove the flywheel.

2. Remove the oil pan and the gasket.

3. Remove the rear oil seal carrier and remove the seal.

7B–31.2 Installing The Rear Oil Seal

1. Install a new crankshaft rear oil seal (Fig. 7B–54).

2. Put a new gasket on the rear oil seal carrier using a sealing compound at the end, and the carrier on the block rear surface. Tighten the bolts evenly to specifications.

3. Put new gaskets on the block flange using sealing compound at each end. Install the end seals with the chamfered end into the grooves, again using a sealing compound and install the oil pan. Tighten the bolts to the correct torque using the steps in (Fig. 7B–55).

4. Install the flywheel on the crankshaft flange. Be sure contact surfaces of flywheel and crankshaft are clean. Tighten the bolts evenly to specifications.

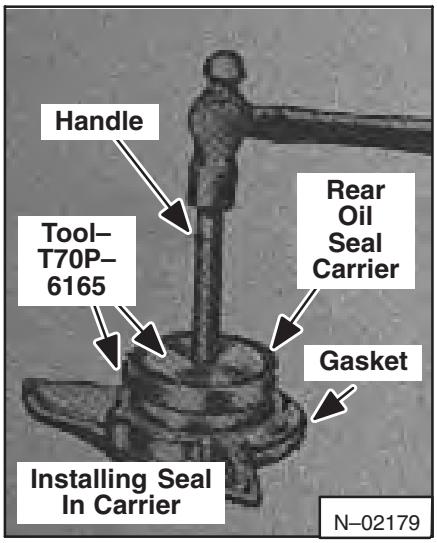

Fig. 7B–54 Installing Oil Seal For Crankshaft

7B–32 MAIN BEARINGS

The cast iron crankshaft is supported by five bearings.

The main bearing caps must be kept in original position. An arrow in the cap points to the front of the engine location marks are on the caps.

The front bearing cap has the letter *F*. The second cap has the number *2*. The center cap has the letter *C*. The fourth cap has the number *4*. The rear cap does not have a marking.

7B–32.1 Removing The Main Bearings

1. Remove the main bearing caps and the thrustwashers. Keep the caps in order so each cap will be installed in its original position.

2. Remove the bearing halves from the cylinder block and from the caps.

3. Check the caps and the crankshaft for damage.

4. Install new bearing halves in the cylinder block and from the bearing caps.

5. Make sure the crankshaft and the bearings are free from dirt and other debris.

6. Measure the bearing clearances using Plastigage (See Paragraph 7B–6.10, Page 7B–13).

7B–32.2 Installing The Main Bearings

1. Clean the crankshaft and the bearings.

2. Install the crankshaft thrustwashers.

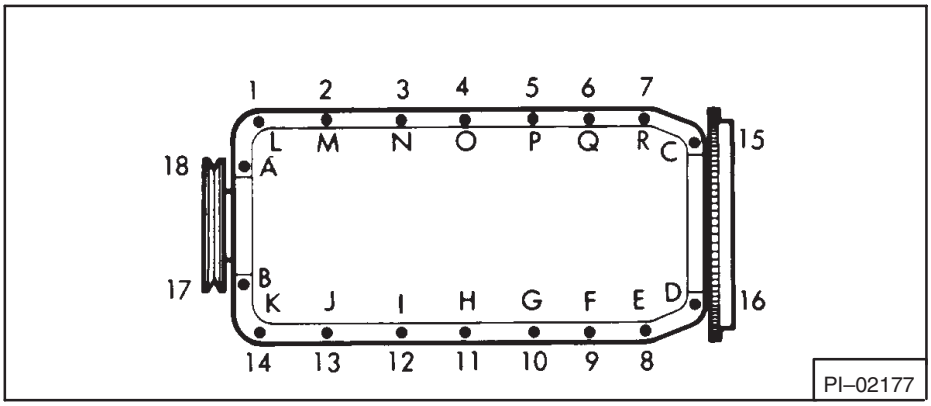

Fig. 7B–55 Tightening Sequence For Oil Pan Bolts

3. Put oil on the bearing surfaces and install the bearing caps in their original positions and tighten the bolts to specifications.

7B–33 CONNECTING ROD BEARINGS

7B–33.1 Removing The Connecting Rod Bearings

1. Turn the crankshaft to remove the number one connecting rod cap. Loosen the connecting rod bolts two or three turns and hit the bolts to release the cap. Remove the bolts and remove the cap. Keep the caps in order so each cap will be installed in its original position.

2. Remove the bearing halves from the connecting rod caps.

7B–33.2 Installing The Connecting Rod Bearings

1. Install the upper and lower bearings in the correct locations.

2. Measure the bearing clearances using Plastigage (See Section 7B–6.10 To Check Crankshaft or Connecting Rod Bearing).

3. Install the connecting rod caps on the connecting rods in their original positions and tighten the bolts to specifications.

7B–34 PISTONS AND CONNECTING RODS

7B–34.1 Removing The Pistons And Connecting Rods

1. Remove the engine (See Section 7B–5 Removing The Engine).

2. Remove the thermostat housing and remove the thermostat.

3. Remove the rocker cover and the gasket.

4. Remove the rocker shaft bolts evenly and remove the rocker arm shaft assembly.

5. Remove the pushrods and keep them in the correct order.

6. Remove the cylinder head bolts and remove the cylinder head and gasket. Do not put the cylinder head flat on its surface. Damage to the spark plugs or the gasket surface can result.

7. Remove the starter and the oil pan.

8. Clean the oil pan and the cylinder block surfaces and remove the end seals.

9. Loosen the bearing cap bolts several turns and hit the bolts to release the bearing cap. Remove the bolts and remove the bearing cap. Keep the bearing caps in order so each can be installed in its original positions. Push the piston and the connecting rod out of the bore.

7B–34.2 Installing The Pistons And Connecting Rods

1. Install the bearing halves in the connecting rods and the end caps. Turn the crankshaft as needed to fit each connecting rod to the crankshaft, but do not install the end cap.

2. Measure the bearing clearances using Plastigage (See Section 7B–6.10 To Check Crankshaft Or Connecting Rod Bearing.)

3. Clean all the bearing surfaces of the Plastigage material. If needed use new rod bearings to get the correct clearances.

4. Install the connecting rods on the crankshaft and tighten the connecting rod bolts to specifications.

5. Install a new gasket on the block flange using sealing compound at each end. Install the end seals with the chamfered ends into the grooves again using sealing compound.

6. Install the oil pan and tighten the bolts to the correct torque, following the tightening sequence. (See Section 7B–31.2 Step 3.)

7. Clean and install the starter. Fasten the starter with the two bolts.

8. Clean all the gasket material from the contact surfaces and install the cylinder gasket on the cylinder block using alignment studs.

9. Install the cylinder head. Remove the alignment studs and install the cylinder head bolts. Tighten the bolts (See Section 7B–21.2 Installing The Cylinder Head).

10. Put oil on both ends of the pushrods and install the pushrods in the correct bores.

11. Install the rocker shaft assembly on the cylinder head put the pushrods on the adjustment screws. Tighten the bolts to the correct specification.

7B–35 CAMSHAFT BEARINGS

The service bearings for the camshaft are machines to fit and need no machining after installation. When one bearing needs replacement replace all three bearings to be sure of the correct camshaft alignment.

Make sure that the oil holes in the bearings and the cylinder block are in correct alignment before installation and that the bearing openings are at 45 ° to the vertical (Fig. 7B–56).

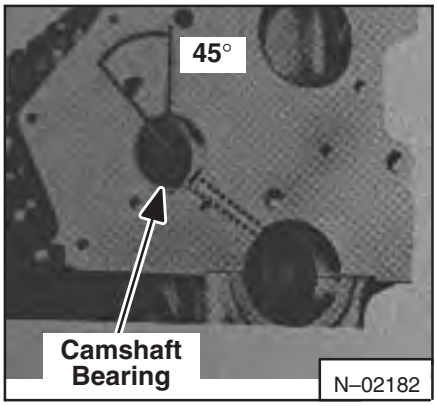

Fig. 7B–56 Crankshaft Bearing Position

7B–35.1 Removing The Camshaft

1. Remove the engine (See Section 7B–5).

2. Remove the flywheel.

3. Remove the crankshaft rear oil seal bracket (Fig. 7B–54).

4. Put a new gasket on the rear oil seal bracket using sealing compound at the ends. Install the bracket on the cylinder block and tighten the bolts to specification.

5. Install the flywheel on the crankshaft flange. Be sure contact surfaces are clean. Tighten the fastening bolts to specification.

6. Install the camshaft.

7B–36 CRANKSHAFT

7B–36.1 Removing The Crankshaft

1. Remove the engine from the Bobcat and put it in an engine stand (See Section 7B–5).

2. Remove the flywheel from the crankshaft.

3. Loosen the governor fastening bolts and remove the drive belt.

4. Remove the sheave from the front of the crankshaft.

5. Remove the front cover.

6. Remove the oil thrower from the shaft (Fig. 7B–57). Remove the timing chain tightener and timing chain. Remove the crankshaft sprocket from the crankshaft.

7. Turn the engine over, remove the oil pan. Remove the oil inlet tube and the screen.

8. Remove the four connecting rod bearing caps and keep them in order so that each cap will be installed on the correct rods.

9. Remove the five main bearing caps and keep them in order so that each will be installed in the correct location.

10. Carefully remove the crankshaft from the cylinder block.

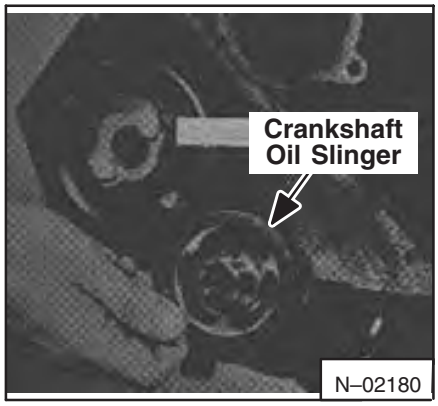

Fig. 7B–57 Oil Thrower

7B–36.2 Installing The Crankshaft

1. Install the main bearings in the cylinder block. Install the crankshaft and check the bearing clearance using the Plastigage method. (See Section 7B–6.10). Install the correct main bearing caps and tighten to specification.

2. Check the crankshaft end play (See Section 7B–4.2).

3. Install the correct thickness of thrustwashers to give the correct end play (Fig. 7B–58).

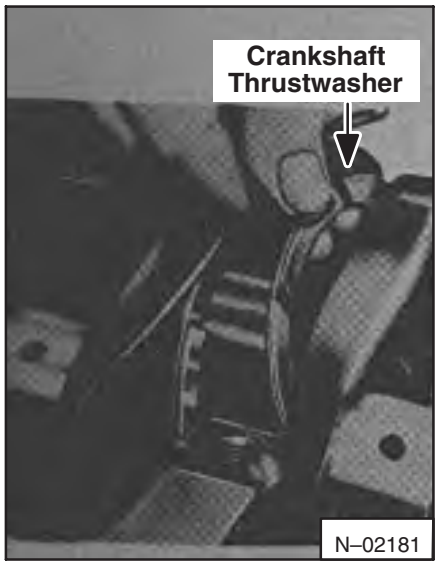

Fig. 7B–58 Installing Thrustwasher

4. Check the connecting rod bearings using the Plastigage method (See Section 7B–6.10.)

5. Install the rod bearings and the correct connecting rod caps in the correct locations and tighten the cap bolts to specification.

6. Install the oil inlet tube and the screen.

7. Install the crankshaft sprocket and timing chain making sure that the timing marks are in alignment.

8. Install the oil thrower timing chain tightener and timing chain cover. Install the crankshaft sheave.

9. Install the oil pan and new gaskets. Tighten the oil pan fastening bolts to specification. (See Section 7B–31.2 Step 3).

10. Turn the engine over again and install the governor drive belt. Make belt adjustment to specified tension.

11. Install the flywheel.

12. Install the engine in the Bobcat loader.

13. Fill the crankcase and the cooling system to the correct level with the specified oil and coolant. Start the engine and check for oil and water leaks.

7B–37 UNIVERSAL JOINT

7B–37.1 Universal Joint Removal

1. Remove the engine. (See Paragraph 7B–5, Page 7B–10).

2. Remove the bolts (Fig. 7B–59, Item 1), holding the u–joint on the flywheel.

3. Remove the u–joint assembly.

7B–37.2 Universal Joint Installation

1. Put LOCTITE on the four bolts.

2. Install the U–joint.

3. Install the bolts and tighten 270–300 in.–lbs. (31–34 Nm) torque.

7B–38 FLYWHEEL

7B–38.1 Flywheel Removal

1. Remove the bolts that attach the blower fan to the flywheel (Fig. 7B–59, Item 2).

2. Remove the blower fan.

3. Remove the bolt holding the flywheel onto the crankshaft.

4. Remove the flywheel.

5. Installation is the reverse of removal.

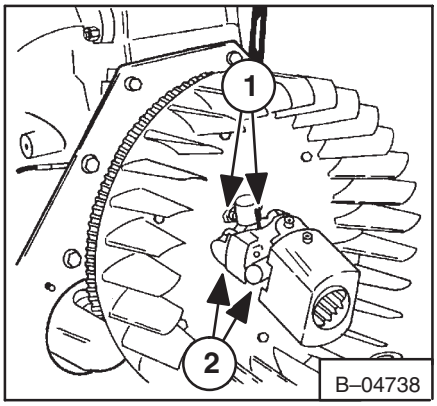

Fig. 7B–59 U–Joint

7B–39 FLYWHEEL RING GEAR

7B–39.1 Removing The Ring Gear

1. Cut between the teeth with a hacksaw.
2. Use a chisel to break the ring gear.

7B–39.2 Installing The Ring Gear

1. Heat the ring gear to a temperature of not more than 600 °F (315°C). Temperature of more than 600° will cause damage to hardness of the ring gear.
2. Install the hot ring gear on the flywheel.

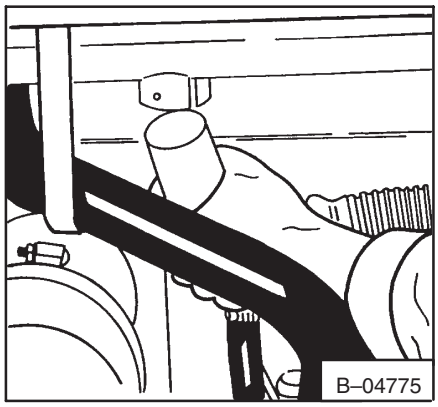

Fig. 7B–60 Removing Exhaust Pipe

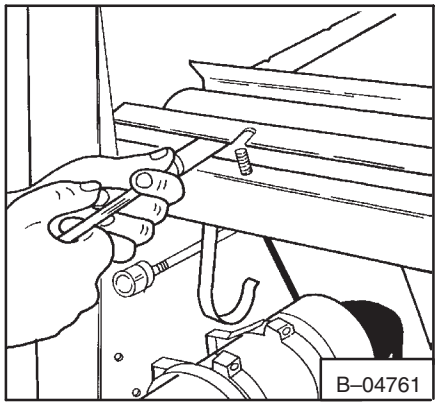

Fig. 7B–61 Removing Muffler Bolts

7B–40 MUFFLER

7B–40.1 Removing The Muffler

1. Remove the rear grill.
2. Remove the exhaust pipe from the muffler (Fig. 7B–60).
3. Remove the bolts holding the muffler on (Fig. 7B–61).
4. Installation is the reverse of removal.

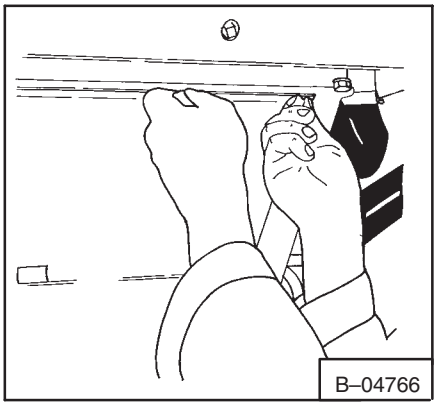

Fig. 7B–62 Removing Panel

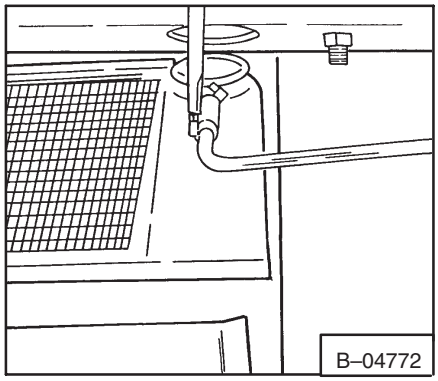

Fig. 7B–63 Removing Clamp From Overflow

7B–41 RADIATOR

7B–41.1 Removing The Radiator

1. Remove the panel from the blower housing (Fig. 7B–62).
2. Loosen the hose clamp on the overflow tube (Fig. 7B–63).
3. Loosen the clamp on the overflow tube by the recovery tank and remove the tank (Fig. 7B–64).
4. Remove the overflow tube (Fig. 7B–65).

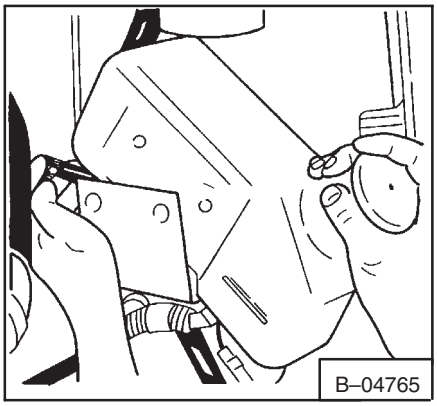

Fig. 7B–64 Removing Coolant Tank

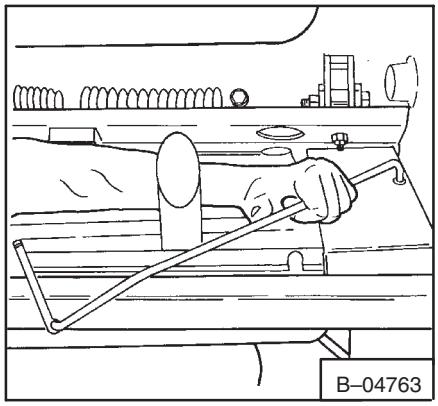

Fig. 7B–65 Removing Overflow Tube

5. Remove the muf fler exhaust pipe.

6. Remove the inlet radiator hose (Fig. 7B–66).

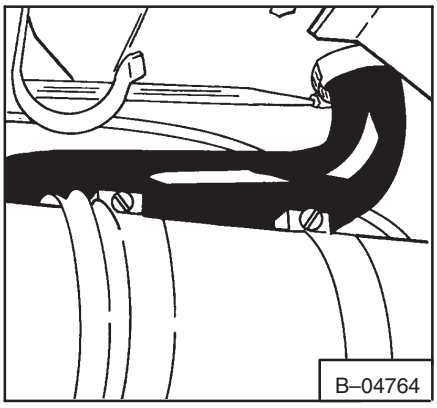

Fig. 7B–66 Removing Inlet Hose

7. Remove the outlet radiator hose (Fig. 7B–67).

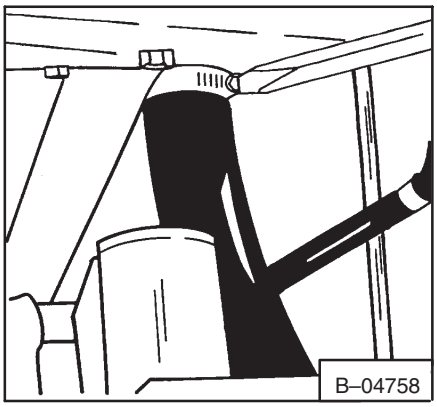

Fig. 7B–67 Removing Outlet Hose

8. Remove both the inlet and the outlet tubelines from the oil cooler (Fig. 7B–68).

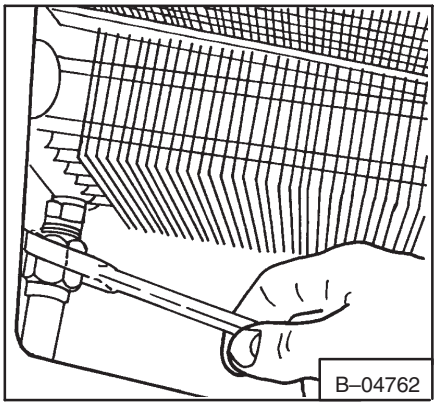

Fig. 7B–68 Removing Tubeline

9. Remove the right mounting bolt for the radiator assembly (Fig. 7B–69).

10. Remove the left mounting bolt for the radiator assembly (Fig. 7B–70).

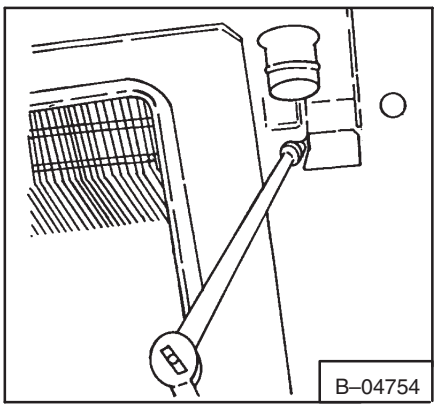

Fig. 7B–69 Removing Bolt

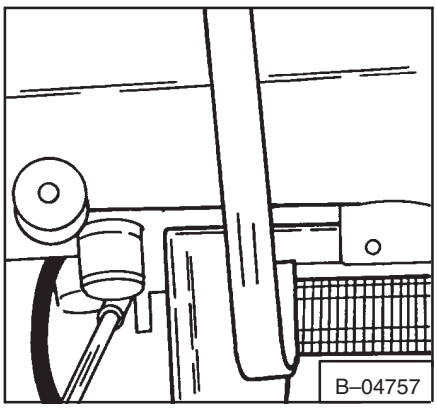

Fig. 7B–70 Removing Bolt

11. Remove the radiator assembly (Fig. 7B–71).

12. Remove the radiator mounting bolts (Fig. 7B–72).

13. Remove the radiator from the assembly.

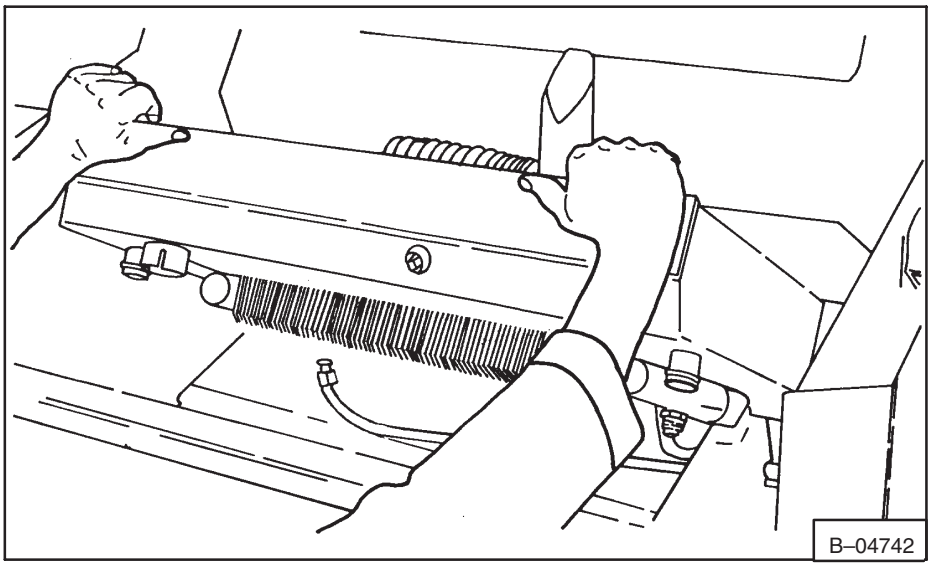

Fig. 7B–71 Removing Radiator Assembly

7B–41.2 Installing The Radiator

1. Install the mounting bolts (Fig. 7B–72).

2. Tighten the mounting bolts 180–200 in.–lbs. (21–23 Nm) torque.

3. Install the radiator assembly (Fig. 7B–71).

4. Install the assembly mounting bolts (Fig. 7B–68 & 7B–69). Tighten the bolts 180–200 in.–lbs. (21–23 Nm) torque.

5. Install the tubelines to the oil cooler.

6. Install the two radiator hoses.

7. Install the muffler exhaust pipe.

8. Install the overflow tube and the coolant recovery tank.

9. Connect the overflow tube at both ends and tighten the hose clamps.

10. Install the panel on the blower housing. Tighten the bolts 180–200 in.–lbs. (21–23 Nm) torque.

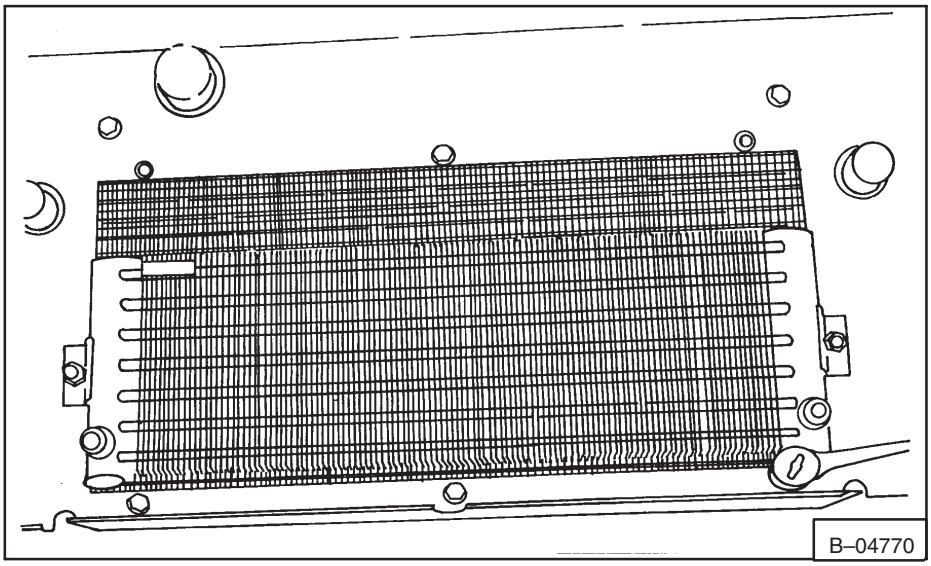

Fig. 7B–72 Removing Mounting Bolts

7B–42 BLOWER HOUSING

7B–42.1 Removing The Blower Housing

1. Remove the engine (See Section 7B–5).

2. Remove the radiator, oil cooler assembly (See Section 7B–42).

3. Disconnect the fuel lines from the fuel filter (Fig. 7B–73).

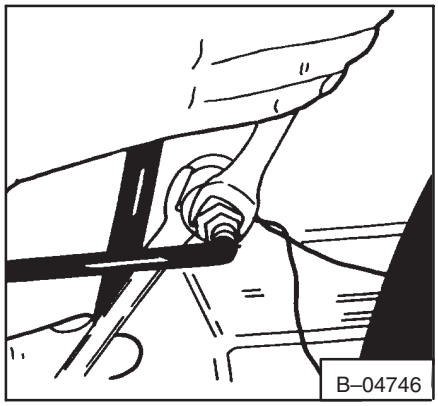

Fig. 7B–73 Disconnecting Fuel Line

4. Remove the center nut from the blower housing (Fig. 7B–74).

5. Remove the bottom bolt from the blower housing (Fig. 7B–75).

6. Remove the blower housing (Fig. 7B–76).

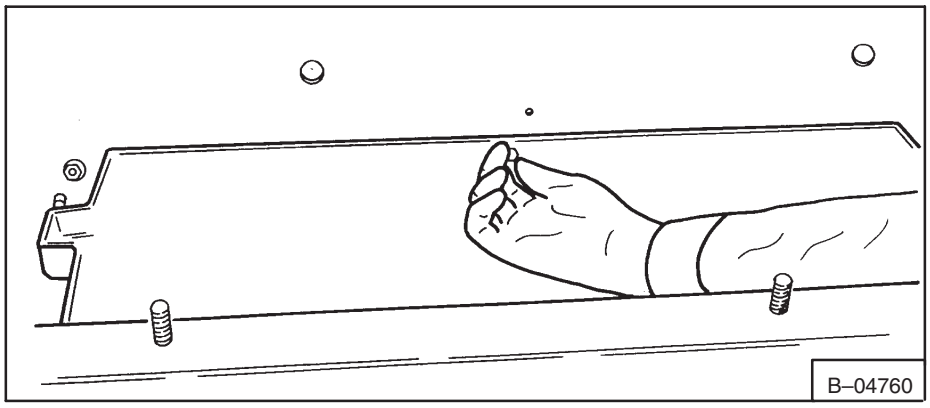

Fig. 7B–74 Removing Center Bolt

7B–42.2 Installing The Blower Housing

1. Install the blower housing and install the bottom bolt (Fig. 7B–75). Tighten the bottom bolt 25–28 ft.–lbs. (34–48 Nm) torque.

2. Install the center nut (Fig. 7B–74). Tighten the nut 180–200 in.–lbs. (21–23 Nm) torque.

3. Connect the fuel line to the fuel filter (Fig. 7B–73).

4. Install the radiator , oil cooler assembly.

5. Install the engine.

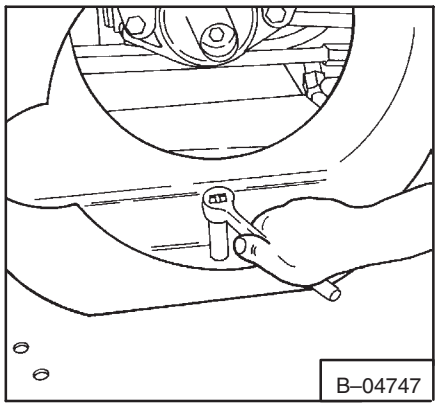

Fig. 7B–75 Removing Bolt

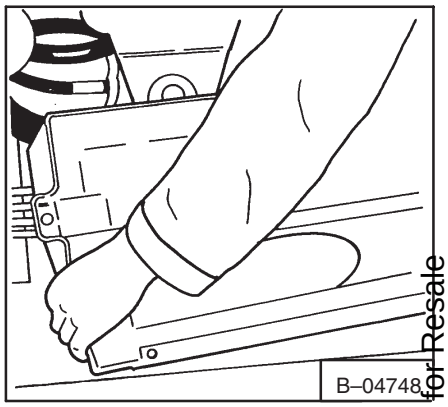

Fig. 7B–76 Removing Blower Housing

7B–43 STARTER

7B–43.1 Removing The Starter

1. Disconnect the battery cables (negative battery cable first).

2. Remove the wires from the starter (Fig. 7B–77). Make note of the wire connections to make sure the wires are connected correctly during assembly.

3. Remove the starter mounting bolts (Fig. 7B–78).

4. Remove the starter (Fig. 7B–79).

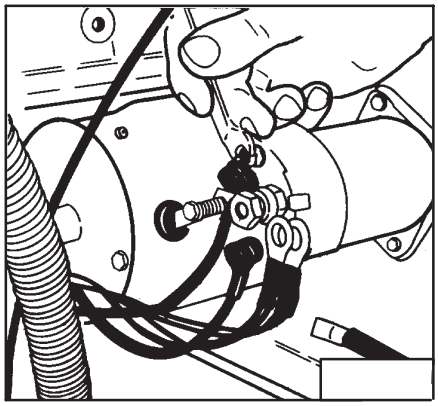

Fig. 7B–77 Removing Starter Wires

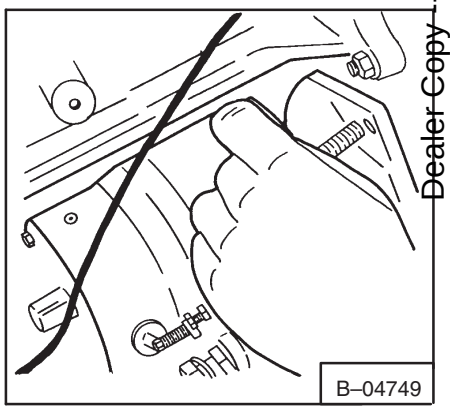

Fig. 7B–78 Removing Mounting Bolts

7B–43.2 Installing The Starter

1. Install the starter (Fig. 7B–79).

2. Install the mounting bolts and tighten 25–28 ft.–lbs. (34–38 Nm) torque.

3. Connect the wires to the correct terminals (Fig. 7B–77).

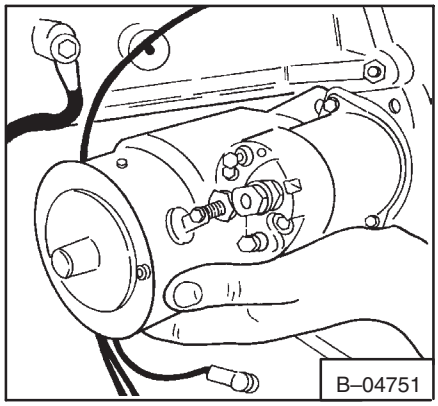

Fig. 7B–79 Removing Starter

ENGINE SERVICE (643)

WARNING

Instructions are necessary before operating or servicing machine. Read Operation & Maintenance Manual, and signs (decals) on machine. Follow warnings and instructions in the manuals when making repairs, adjustments or servicing. Check for correct function after adjustments. repairs or service. Failure to follow instructions can cause injury or death.

W–2144–0189

7C–1 Troubleshooting

PROBLEM	CAUSE	CORRECTION
Engine will not turn over with the starter.	Battery has lost its charge.	Charge the battery. Check the functionsof the charging system.
	Loose battery connection.	Clean battery connections and cables. Tighten clamps.
	Loose starter connections.	Tighten the connections.
	Damaged starter switch.	Make replacement of the switch.
	Broken or disconnected wiring harness.	Connect or make replacement of wiring.
	Damaged starter or solenoid.	Repair as needed.
Engine does not start or is difficult to start.	Wrong starting procedure.	Refer to *Starting Procedure* in the Bobcat Operator's Manual.
	No fuel in the tank.	Add fuel. Remove air from the fuelsystem.
	Air cleaner is dirty.	Service the air cleaner.
	Fuel tank vent in cap has restriction.	Remove the cap and clean the vent.
	Fuel line has air leak or dirt or water.	Correct as necessary.
	Damaged fuel lift pump.	Make replacement of pump if needed.
	Hydraulic/Hydrostatic load on engine.	Put all controls in neutral and warm oil reservoir during very low temperatures.
	Damage to fuel injection system.	Check and make repairs as needed.
	Crankcase oil is thick.	Use engine oil of correct viscosity (See Oil Specification Chart).
Engine misses, runs irregularly or stops.	Fuel injection set wrong.	Check timing.
	Dirty fuel mixture, or restriction in fuel filter or vent.	Clean as necessary.
	Poor compression.	Check for loose cylinder head bolts.
	Water in the fuel.	Drain and replace fuel. Replace fuel filters.
Engine overheats.	Engine is overloaded.	Operate in low range. Operate at rated RPM.
	Dirty engine oil.	Make replacement of engine oil.
	Exhaust system has restriction.	Correct as necessary.
	Injection timing is wrong.	Check injection timing.
Too much engine vibration.	Loose engine mounts.	Tight mount bolts to correct torque.
	Worn rubber mounts.	Replace rubber mounts.

7C–2 FUEL SYSTEM

7C–2.1 Replacing The Fuel Filter

The fuel filter is on the right hand side of the engine on the main frame (Fig. 7C–1). Replace the fuel filter every 300 hours of loader operation.

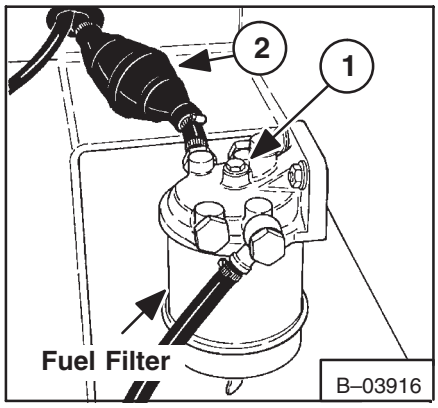

Fig. 7C–1 Fuel Filter

To replace the fuel filter element:

1. Clean the filter areas.
2. Shut–off the fuel at the fuel tank.
3. Remove the bolt from the top of the filter housing (Fig. 7C–1, Item 1).
4. Remove the element and the rubber seal from the housing.
5. Install a new rubber seal on the housing and put a small amount of oil on the rubber seal.
6. Install the new filter element in the container and install on the filter head. Finger tighten the bolt.
7. Open the fuel shut–off valve at the tank until the fuel filter container is full.
8. Close the fuel shut–off valve and tighten the bolt to prevent leakage.
9. Open the fuel shut–off valve.

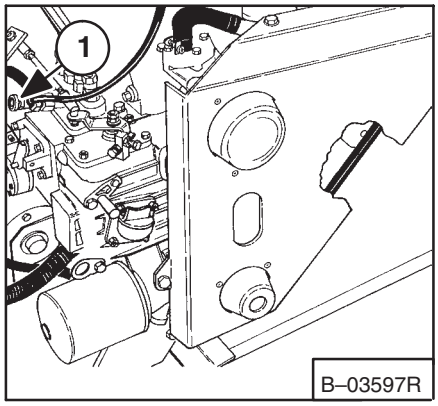

Fig. 7C–2 Injection Pump Valve

7C–2.2 To Remove The Air From The Fuel System

After replacement of the fuel filter element or when the fuel tank has run out of fuel, the air must be removed from the fuel system before starting the engine.

To remove the air from the fuel system, use the following procedure:

1. Open the bleed screw (Fig. 7C–2, Item 1) on the fuel injection pump.
2. Operate the hand pump at the fuel filter (Fig. 7C–1, Item 2) until the hand pump feels solid.
3. Close the bleed screw (Fig. 7C–2, Item 1).
4. Put the engine stop control in the operating position.
5. Start the engine.
6. If the engine still does not run correctly (rough) open the bleed screw (Fig. 7C–2, Item 1) for several minutes until the engine runs smoothly.

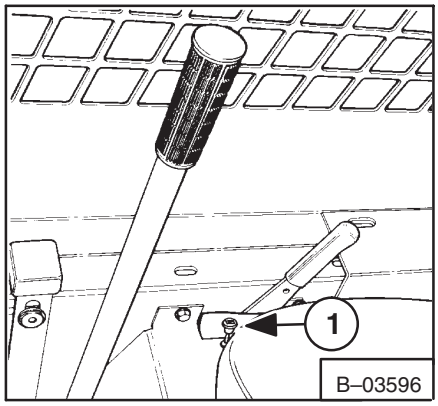

Fig. 7C–3 Engine Stop Control

7C–2.3 Checking Glow Plugs

1. Disconnect the glow plug cables and leads.

2. Connect a circuit tester, one terminal to each end of the glow plug (Fig. 7C–4).

3. The reading must be approximately 1.5 ohms. If the resistance is zero ohms the glow plug has a short circuit. If the resistance is infinite the coil of the glow plug is broken.

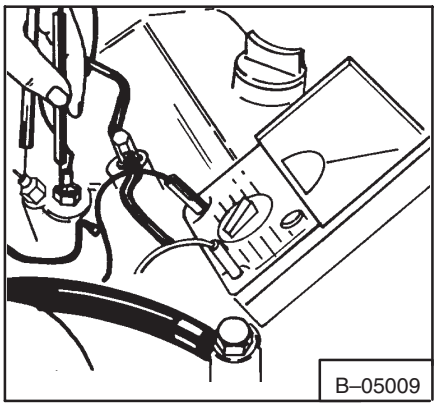

Fig. 7C–4 Checking Glow Plugs

7C–2.4 Removal And Installation Of The Fuel Injection Pump

The injection pump has parts that have been machined to a very close specification and pump operation has a direct effect on the engine operation. Use special care when working on the injection pump.

IMPORTANT

Never steam clean or put cold water on an injection pump while the engine is running or while it is hot. If you do it will cause serious damage to the injection pump.

I–2135–0997

1. Clean the injection pump and the area around it with a cleaning solvent or by steam cleaning.

2. Remove the fuel inlet line and the injector tubelines.

3. Remove the injection pump cover (Fig. 7C–5).

4. Remove the four nuts from the injector pump.

5. Put the pin in the control rack in alignment with the slot in the engine block.

6. Remove the injection pump (Fig. 7C–6).

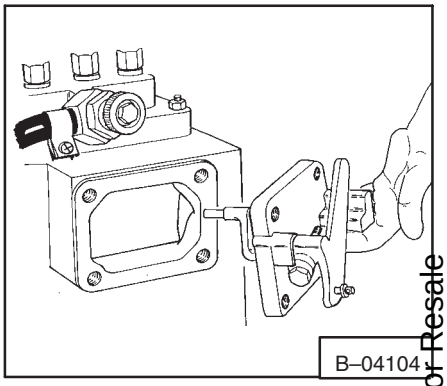

Fig. 7C–5 Removing Injection Pump Cover

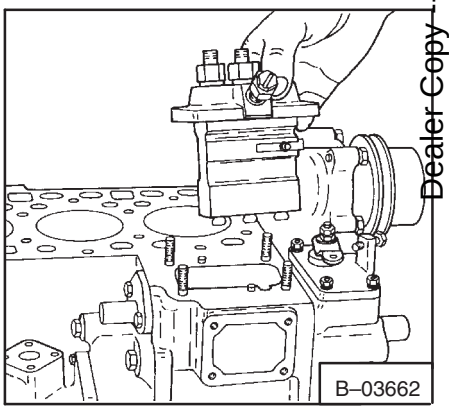

Fig. 7C–6 Removing Injection Pump

NOTE: Make sure the same number of shims are installed under the injection pump because the shims are for the engine timing.

To install the injection pump:

When the injection pump is installed, make sure the pin on the control rack is correctly installed in the fork lever number 1 slot (Fig. 7C–7) If the pin is not correctly installed, the engine will run over maximum speed and serious damage can result.

NOTE: Make sure the correct number of shims are installed.

1. Install the injection pump with the shims between the pump housing and the engine block. Tighten the nuts to 17–20 ft.–lbs. (23–27 Nm) torque.

2. Install the injector tubeline and tighten.

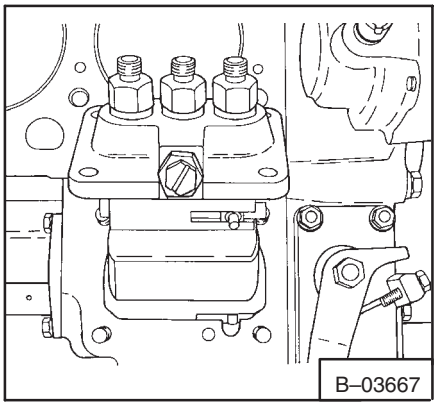

Fig. 7C–7 Installing Pump

3. Install the fuel inlet and tighten.

4. Remove the air from the fuel system (See Paragraph 7C–2.2).

7C–2.5 Timing The Fuel System

Timing of the fuel system is done by changing the number of shims between the injection pump and the engine block (Fig. 7C–8, Item 1). Each shim will change the timing 1.5 degrees. The timing of the fuel injection pump will be later when a shim is added, and earlier when a shim is removed.

Time the fuel system as follows:

1. Remove the number 1 cylinder injector tubeline from the injector pump.

2. Install a short pipe to the outlet of the number 1 cylinder injector port. Point the pipe up (vertical).

3. With the fuel supply to the injection pump, rotate the engine in a clockwise direction. Fuel must flow from the pipe as the mark on the crankshaft pulley and the pointer move into alignment (Fig. 7C–9). The correct timing for the engine is 25 to 26 degrees B.T.D.C.

4. Add or subtract shims as needed to adjust the delivery time of the fuel. Each shim will change the timing 1.5 degrees.

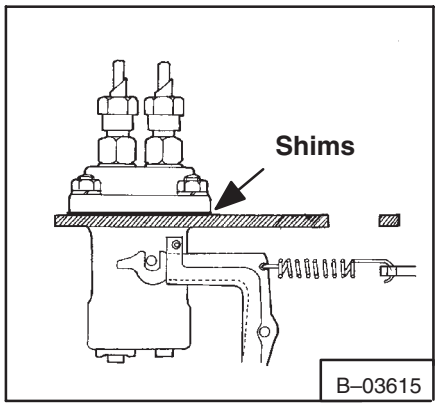

Fig. 7C–8 Injection Pump Shims

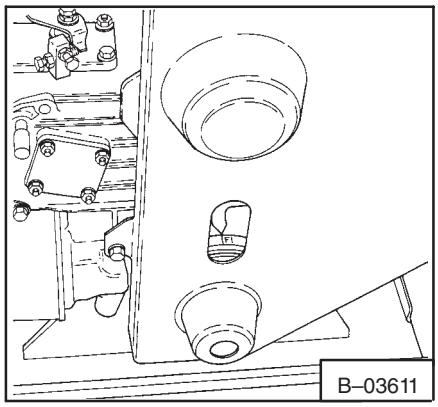

Fig. 7C–9 Timing Marks

7C–2.6 Fuel Injector Nozzles

WARNING

Diesel fuel or hydraulic fluid under pressure can penetrate skin or eyes, causing serious injury or death. Fluid leaks under pressure may not be visible. Use a piece of cardboard or wood to find leaks. Do not use your bare hand. Wear safety goggles. If fluid enters skin or eyes, get immediate medical attention from a physician familiar with this injury.

W–2072–0496

These are some engine problems caused by damaged injector nozzles.

1. The engine is hard to start or will not start.

2. Engine operation is not smooth.

3. The engine will not idle correctly.

4. Bad engine performance.

5. The engine exhaust smoke is black, white or blue.

Remove the injector nozzle from the engine and test the injectors only after engine performance shows that there may be damage.

To remove the injector nozzles:

1. Remove the fuel lines from the injector nozzles.

2. Remove the injector nozzles from the engine.

Any of these conditions can be an indication of damaged or dirty injector nozzles. Clean any debris from the nozzle and make the test again. Replace any injector nozzles that do not operate correctly after they have been cleaned.

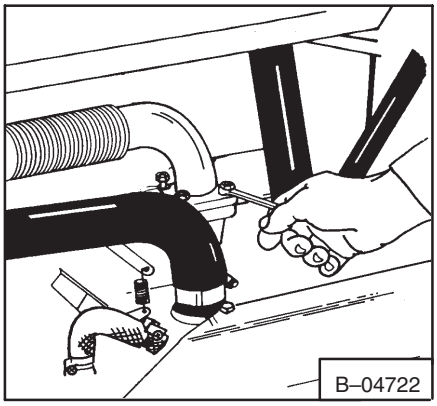

Fig. 7C–10 Removing Exhaust Pipe

7C–3 REMOVING AND INSTALLING THE ENGINE

7C–3.1 Removing The Engine

Use the following procedures to remove the engine from the loader:

1. Open the rear door and clean the engine area.

2. Disconnect the battery cables, ground cable first.

3. Remove the coolant from the engine and the radiator hoses using a drain hose on the drain cock. The radiator cap must be loosened to drain coolant.

4. Shut off the fuel.

5. Remove the exhaust pipe from the manifold (Fig. 7C–10).

6. Remove the radiator hoses (Fig. 7C–11).

7. Remove the fuel return hose (Fig. 7C–12, 7C–13).

8. Remove the hot wire from the starter (Fig. 7C–14).

9. Remove the electrical wire from the solenoid (Fig. 7C–15 & 7C–16).

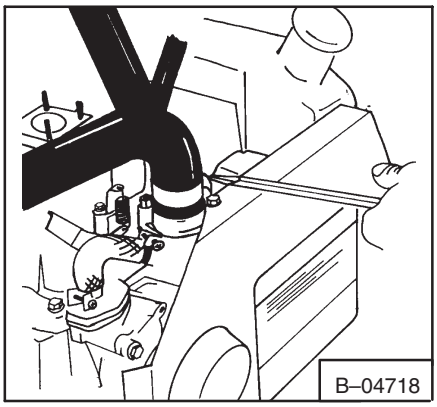

Fig. 7C–11 Removing Radiator Hose

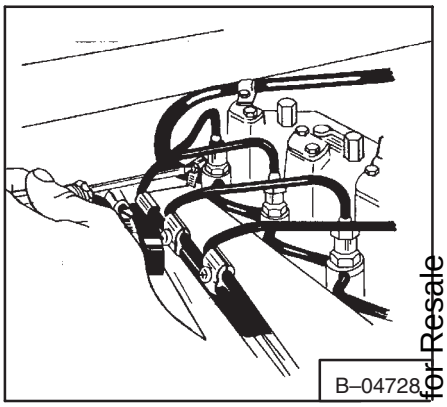

Fig. 7C–12 Removing Fuel Return Line

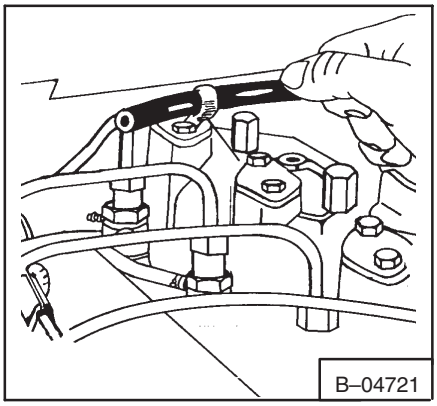

Fig. 7C–13 Removing Fuel Return Line

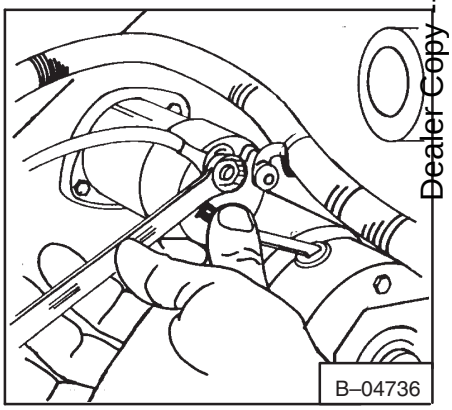

Fig. 7C–14 Removing The Starter Wire

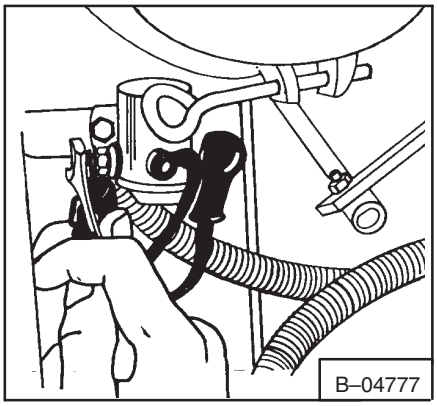

Fig. 7C–15 Removing Solenoid Wire

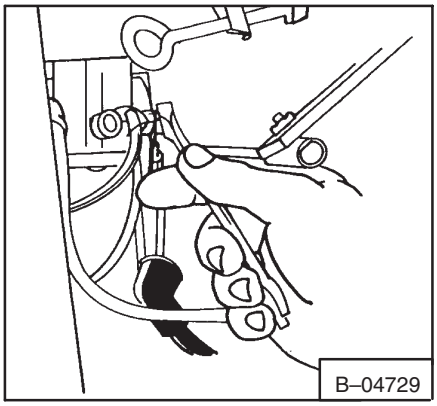

Fig. 7C–16 Removing Solenoid Wires

10. Remove the fuel inlet line at the fuel filter.

11. Remove the air cleaner hose (Fig. 7C–17).

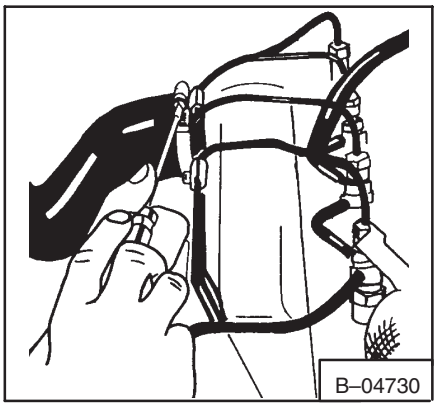

Fig. 7C–17 Removing Air Cleaner Hose

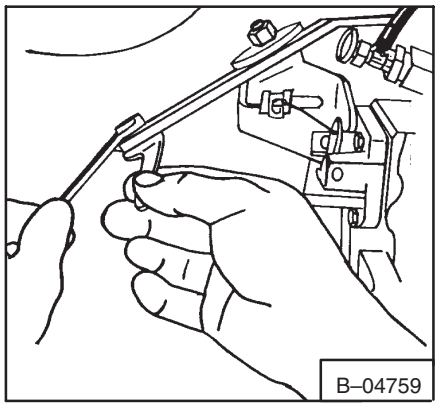

Fig. 7C–18 Removing Throttle Linkage

12. Remove the throttle linkage (Fig. 7C–18).

13. Disconnect the engine harness at the connector (Fig. 7C–19).

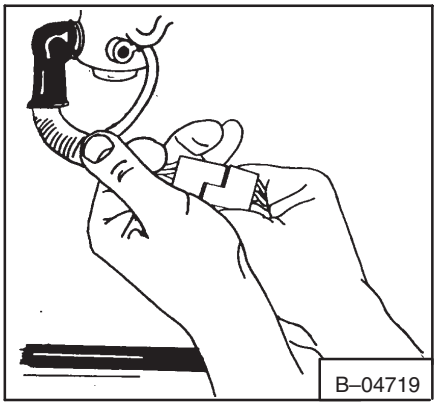

Fig. 7C–19 Disconnecting Harness

14. Remove the spring clamp from the fuel shut–of f cable (Fig. 7C–20).

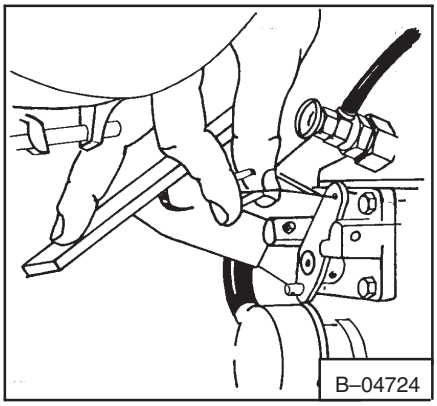

Fig. 7C–20 Removing Spring Clamp

15. Remove the cable from the speed control arm (Fig. 7C–21).

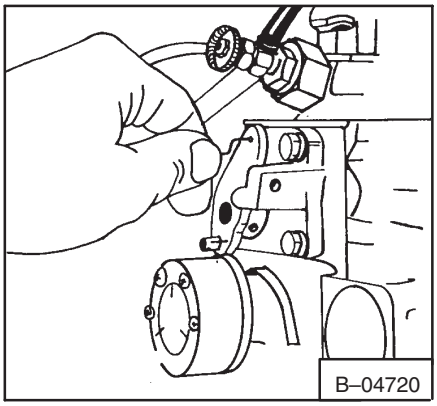

Fig. 7C–21 Removing Cable

16. Remove the engine mounting bolts (Fig. 7C–22).

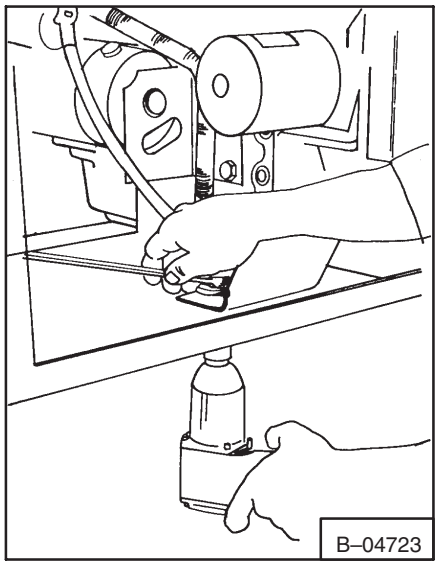

Fig. 7C–22 Removing Mounting Bolts

17. Remove the engine (Fig. 7C–23).

7C–3.2 Installing The Engine

1. Raise the operator guard.
2. Put the engine in the loader.
3. Have a second person make alignment of the coupler on the engine flywheel to the splined shaft on the hydrostatic motor from the inside of the operator area.
4. Install the bolts in the engine mounts and tighten the bolts 65–70 ft.–lbs. (88–95 Nm) torque.
5. Install all other parts removed.

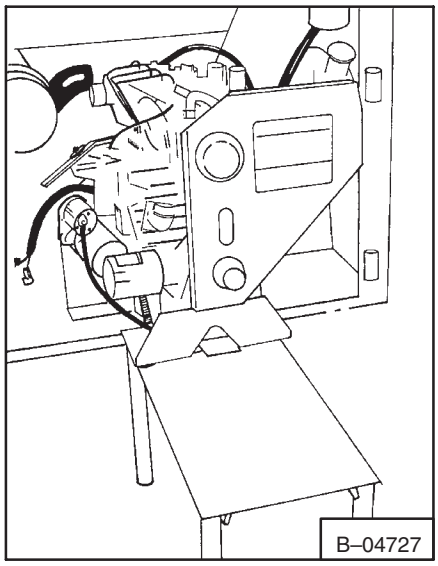

Fig. 7C–23 Installing the Engine

To repair the injector nozzles (Fig. 7C–10):

IMPORTANT

Do not disassemble or test the injector nozzles unless you have the correct service and testing tools.

I–2121–0297

You can adjust the release pressure of the injector nozzle by adding or removing spacers (Fig. 7C–24, Item 1) from the top of the nozzle spring (Fig. 7C–24, Item 2). Each spacer will change the release pressure about 142 PSI (980,6 kPa). The release pressure must be 1990–2133 PSI (13721–14707 kPa).

⚠ WARNING

Diesel fuel or hydraulic fluid under pressure can penetrate skin or eyes, causing serious injury or death. Fluid leaks under pressure may not be visible. Use a piece of cardboard or wood to find leaks. Do not use your bare hand. Wear safety goggles. If fluid enters skin or eyes, get immediate medical attention from a physician familiar with this injury.

W–2072–0496

To check the injector nozzle:

1. Connect the injector nozzle to the tester with the nozzle down.
2. Operate the hand lever at a slow rate until the injector nozzle opens. The pressure must be 1990–2133 PSI (13721–14707 kPa).
3. If the pressure is not correct, disassemble the injector nozzle and add or remove spacers. Each 0.05 mm shim will change pressure setting about 70 PSI (485 kPa). Assemble the injector nozzle and check the pressure. When you assemble the injector nozzle, tighten the retainer nut (Fig. 7C–24, Item 3) 43–58 ft.–lbs (59–79 Nm) torque. Any higher torque can cause slow action of the valve.

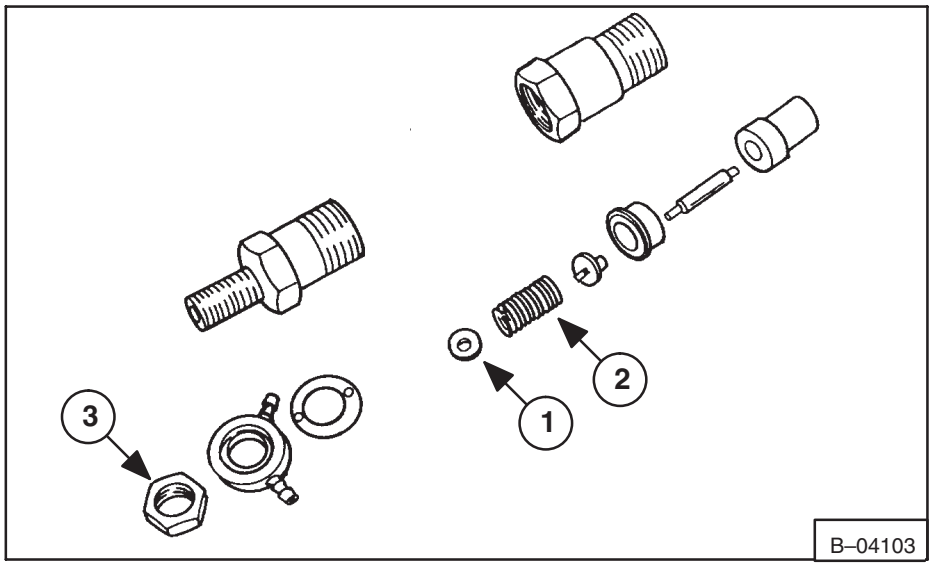

Fig. 7C–24 Injector Nozzle

4. Check for inside leakage. Operate the hand lever until the pressure is almost enough to open the injector valve. Record the pressure. Release the hand lever. Check the pressure decrease for 10 seconds. The nozzle has damage if the pressure decrease is more than 740 PSI (5162 kPa) in 10 seconds.

Check that the spray pattern is correct (Fig. 7C–25). The spray pattern is not correct if:

1. Fuel comes out of the side of the nozzle.
2. Drops of fuel are coming from the nozzle.
3. The nozzle does not have an even flow coming from the nozzle.

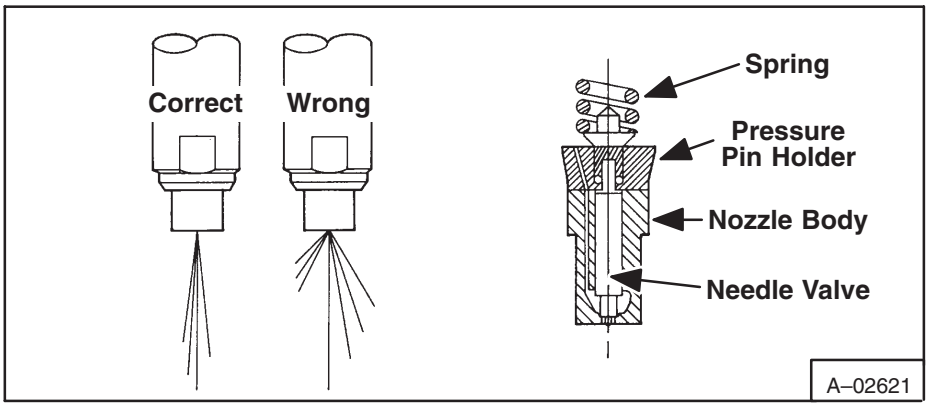

Fig. 7C–25 Spray Pattern For Injector Nozzle

7C–4 REPAIRING THE CYLINDER HEAD

7C–4.1 Removing The Cylinder Head

1. Remove the nuts from the valve cover.
2. Remove the valve cover (Fig. 7C–26).
3. Disconnect the injector tubelines.
4. Remove the injector nozzles and the copper gasket (Fig. 7C–27).
5. Remove the intake manifold.
6. Remove the belt shield.
7. Remove the alternator.
8. Remove the rocker arms (Fig. 7C–28).
9. Remove the valve rotators.
10. Remove the push rods.
11. Remove the water return pipe.
12. Remove the cylinder head bolts.

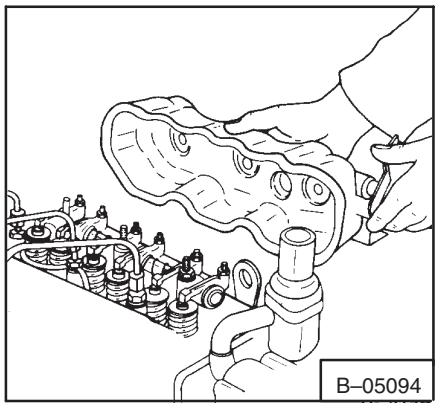

Fig. 7C–26 Removing The Valve Cover

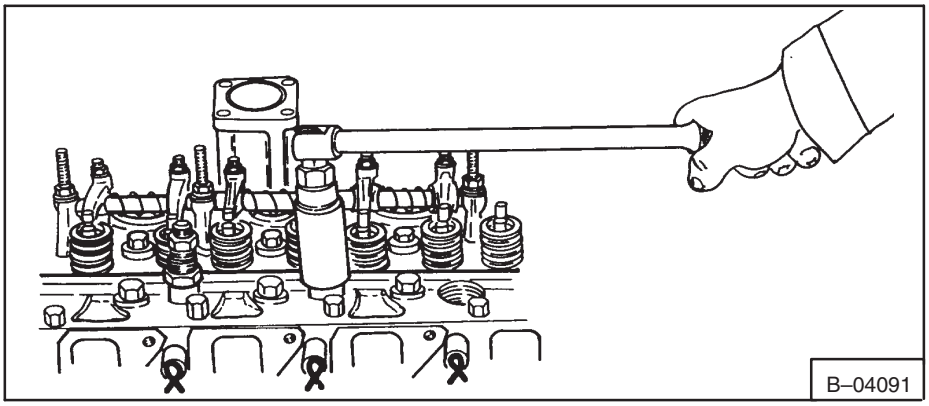

Fig. 7C–27 Removing Injector Nozzles

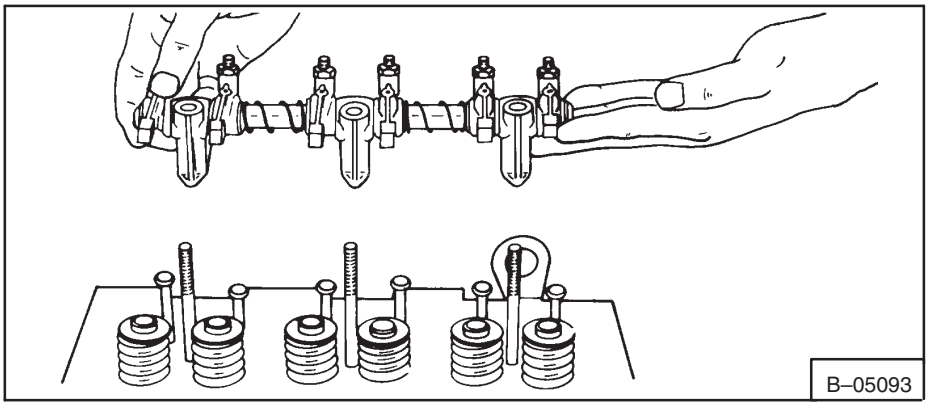

Fig. 7C–28 Removing The Rocker Arms

13. Remove the cylinder head (Fig. 7C–29).

14. Remove the gasket and the O–ring.

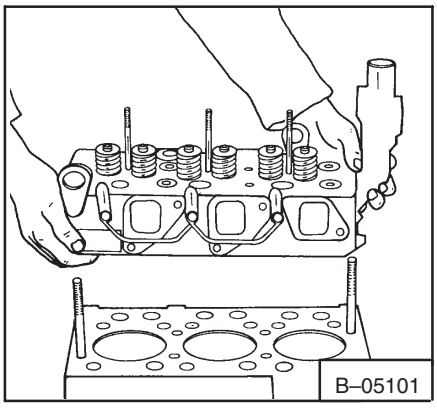

Fig. 7C–29 Removing The Cylinder Head

7C–4.2 Disassembly Of The Cylinder Head

NOTE: There may be a shim under the cylinder head gasket. Use the shim over again or replace it with the same size shim.

1. Remove the valve cap and the valve spring collet (Fig. 7C–30).

2. Remove the valve spring retainer.

3. Remove the seal on the valve and remove the valve from the cylinder head.

4. Remove the thermostat (Fig. 7C–31).

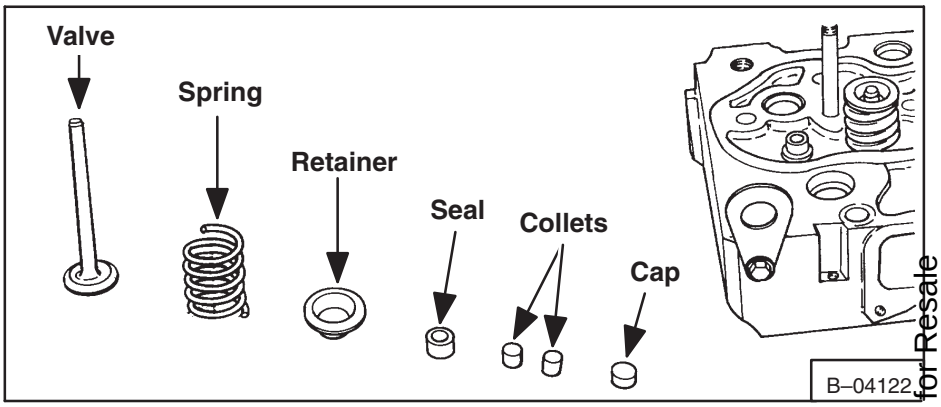

Fig. 7C–30 Removing The Valves

7C–4.3 Servicing The Cylinder Head

1. Clean the surface of the cylinder head.

2. Put a straight edge on the cylinder head (Fig. 7C–32).

NOTE: Do not put the straight edge across the combustion chamber.

3. Put a feeler gauge between the straight edge and the surface of the cylinder head.

4. The maximum distortion of the cylinder head surface is ± 0.002 inch (± 0,05 mm).

5. If the measurement is more than the specifications, remove the combustion chamber then grind the cylinder head (max. allowable is 0.004 inch). Check valve recess after servicing. See Steps 10 & 11. Grind the same amount of material from the bottom of the combustion chamber as was removed from the head.

6. Clean the surface of the valve surface.

7. Measure the width of the valve seat (Fig. 7C–33).

8. The correct width of the valve seat is 0.0827 inch (2,1 mm) and the seat angle is 45 degrees.

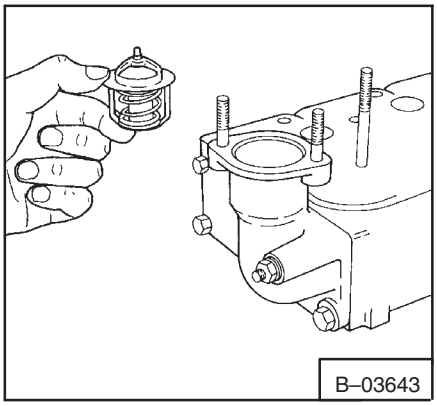

Fig. 7C–31 Removing The Thermostat

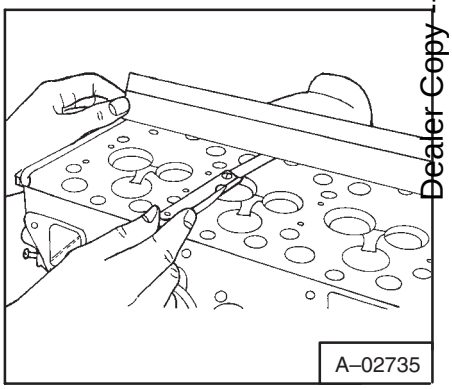

Fig. 7C–32 Checking Cylinder Head Surface

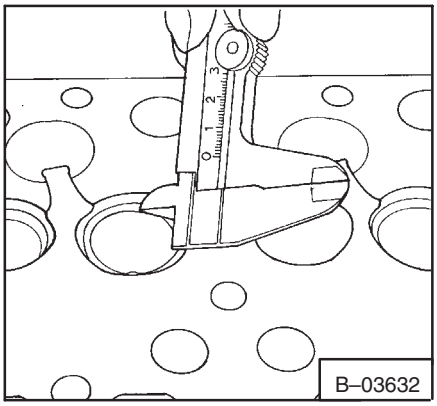

Fig. 7C–33 Checking The Valve Seat

9. Use the following steps to grind the valve seats (Fig. 7C–34):

   Item a – Use a 45° cutter to grind the surface of the valve seat.

   Item b – Use a 15° cutter to grind the front surface of the valve seat.

   Item c – Use a 65° or 75° cutter to grind the rear surface of the valve seat to finish the seat to a 0.0827 inch (2,1 mm) width.

   Item d – Grind the valve surface to a 45° angle.

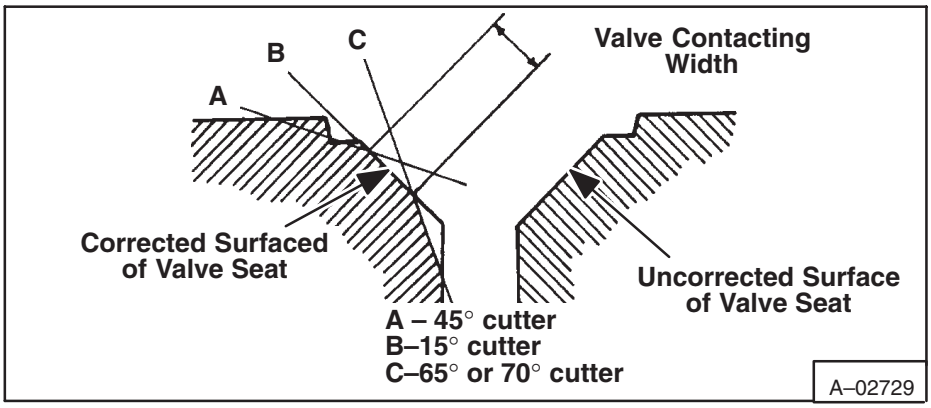

Fig. 7C–34 Grinding The Valve Seat

10. Install the valve in the seat and check depth (Fig. 7C–35).

11. The specification for the depth of the valve is 0.0433–0.0512 inch (1,1–1,3 mm).

If the measurement is more than the specification add the correct thickness washer under the valve spring to keep the correct tension on the spring.

12. Clean the valve guide.

13. Install the valve in the cylinder head.

14. Install a dial indicator gauge.

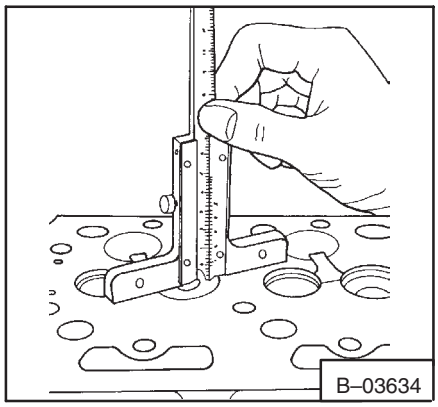

Fig. 7C–35 Checking Valve Depth

15. Measure the clearance of the valve guide and the valve (Fig. 7C–36).

16. The measurement must be 0.0016–0.0023 inch (0,040–0,058 mm). To remove and replace the valve guide, make the driver tool as shown in (Fig. 7C–36a).

    Press the used valve guide out of the cylinder head using the special driver tool (Fig. 7C–36b).

    Put oil on the outside diameter of the new valve guide. Press the new valve guide into the cylinder head from the top side. Use the special driver tools (Items 1 & 2), press the new guide until the tool contacts the cylinder head (Fig. 7C–36b).

    Ream the valve guide to the correct specifications.

17. Measure the valve spring (Fig. 7C–37). The length of the spring must be 1.6417–1.6614 inch (41,7–42,2 mm). Replace the valve spring if it does not meet this specification.

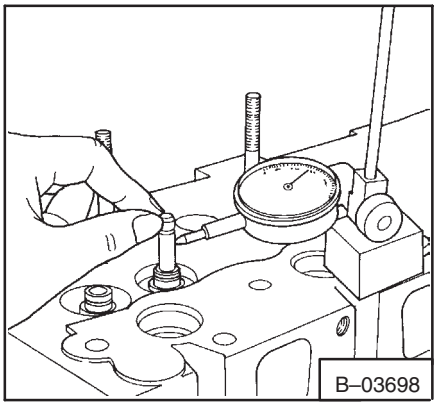

Fig. 7C–36 Checking Valve Guide

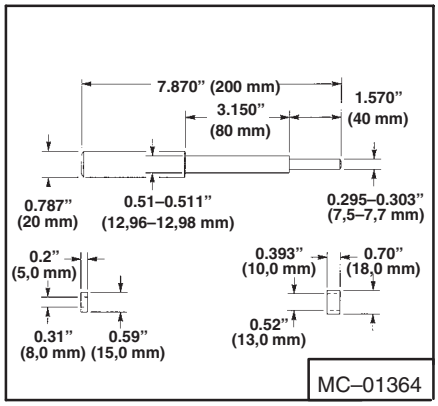

Fig. 7C–36a Valve Guide Tool

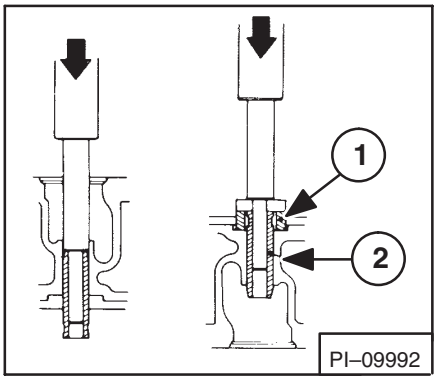

Fig. 7C–36b Removing & Installing Guides

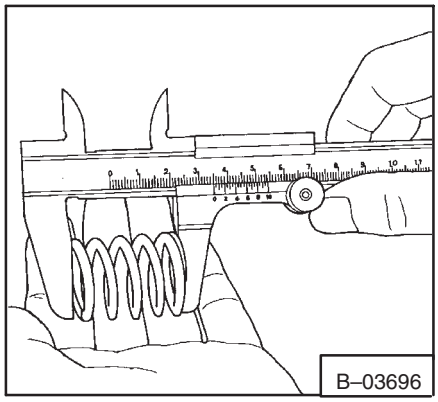

Fig. 7C–37 Checking Valve Spring Length

18. Check the valve spring with a straight edge to make sure it is straight (Fig. 7C–38). Replace the spring if it is not straight.

19. Put the valve spring in a tester (Fig. 7C–39).

20. Push down on the spring 1.3839 inch (35,15 mm). The compression load must be 22.5 to 26.5 lbs. (10,21 to 12,03 kg). Replace the valve spring if it does not meet these specifications.

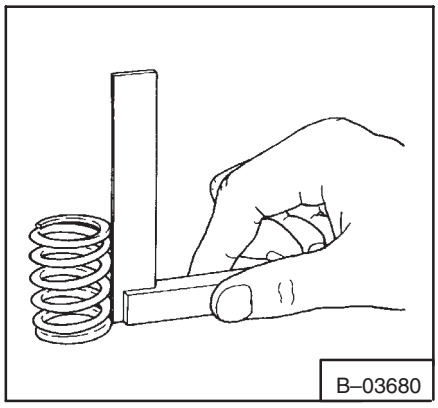

Fig. 7C–38 Checking Valve Spring

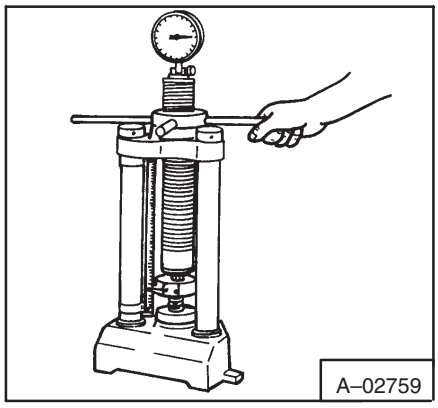

Fig. 7C–39 Valve Spring Compression

21. Measure the inside diameter of the rocker arm bushing and the shaft diameter (Fig. 7C–40). The inside of the rocker bushing is 0.5513–0.5529 inch (14,002 – 14,043 mm). The rocker arm shaft diameter is 0.5501–0.5506 inch (13,973 – 13,984 mm). If the measurements are not within the specifications replace the needed parts.

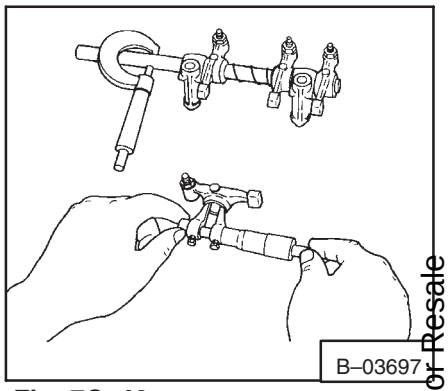

Fig. 7C–40 Checking Rocker Arm & End Shaft

7C–4.4 Assembly Of The Cylinder Head

1. Install the valves.
2. Put oil on the valve seal and install the seal on the valve.
3. Install the valve spring and the retainer.
4. Install the spring collet and the valve cap.
5. Install the thermostat.

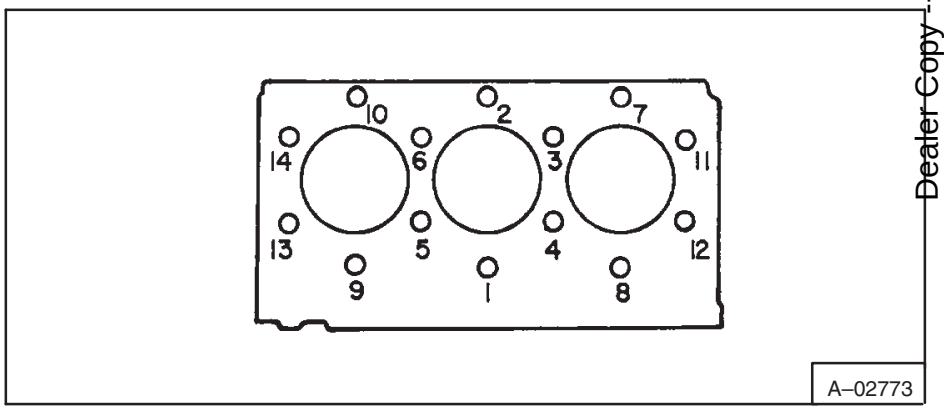

Fig. 7C–41 Torque Sequence

7C–4.5 Installing The Cylinder Head

1. Install a new gasket and O–ring. Install a shim if there was one removed.
2. Install the cylinder head on the engine block.
3. Put oil on the bolts and nuts and tighten torque. Use the same tightening sequence as shown in (Fig. 7C–41).

   Flange Head Bolt . . . . . .65–68 ft.–lbs. (88–92 Nm)
   Bolt W/Washer . . . . . .58–61 ft.–lbs. (79–88 Nm)

4. Lower the piston which is to be measured for the clearance between the cylinder head and the piston.
5. Put a piece of solder in the injector port (Fig. 7C–42). Make sure the solder does not touch the valves.
6. Turn the engine with your hand.

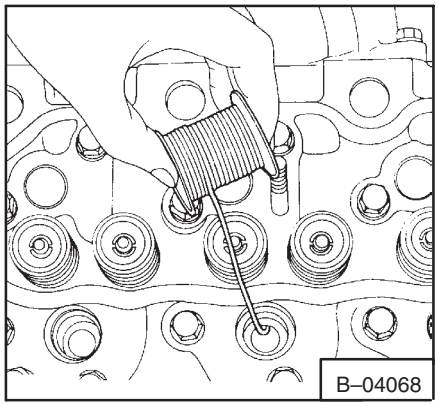

Fig. 7C–42 Checking Top Clearance

7. Remove the solder and measure it. The thickness must be 0.0276–0.0454 inch (0,7–11,5 mm). If the measurement is not in specifications, remove the cylinder head and install the correct shim between the cylinder head and the engine block.

8. Install cylinder head and tighten the bolts and nuts (Fig. 7C–41). Make sure to tighten the bolts and nuts to the correct torque after the engine has been operated for 30 minutes.

9. Install the push rods.

10. Install water return pipe.

11. Install the rocker arms. Tighten the holding nuts to 15 ft.–lbs. (20 Nm) torque.

12. Install the intake manifold.

13. Install the injector nozzle with a new copper gasket. Tighten to 22–36 ft.–lbs. (30–49 Nm) torque.

14. Install the injector tubelines.

15. Adjust the valve clearance (Fig. 7C–43). Make sure the piston for each cylinder is at T.D.C. when making the adjustment.

16. Install the valve cover.

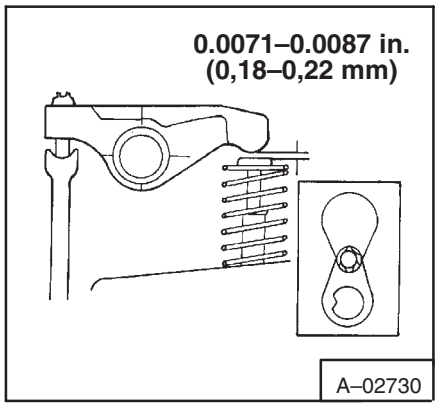

Fig. 7C–43 Valve Clearance

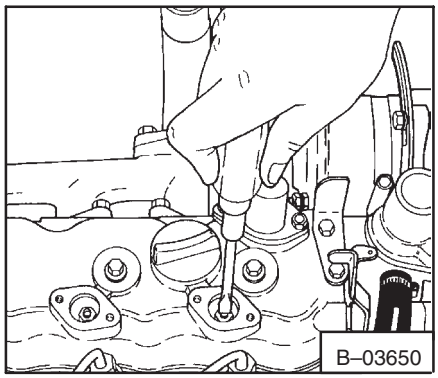

Fig. 7C–44 Compression Release Adjustment

7C–4.6 Adjusting The Compression Release Mechanism (S/N 1 1620 and Below Only)

The compression release lever is used for the purpose of decreasing the compression for cold weather starting, but normally is not used.

To adjust the compression release mechanism (Fig. 7C–44):

1. Remove the covers from the valve cover.

2. Adjust the exhaust valve in the closed position.

3. Loosen the locknut and turn the adjustment bolt out.

4. Put the compression release lever in the compression release position.

5. Turn the adjustment bolt clockwise until it contacts the rocker . From this position turn the adjustment bolt 1 to 1.5 turns clockwise to get the correct clearance (Fig. 7C–45). Make the adjustment to each exhaust valve.

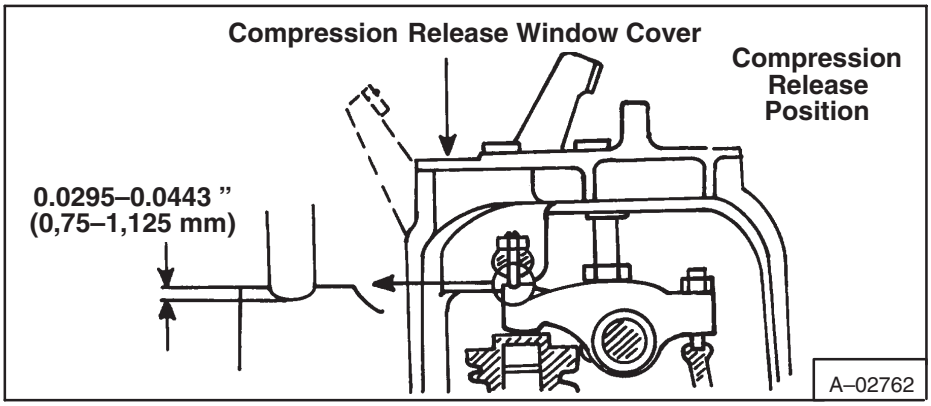

Fig. 7C–45 Compression Release

6. Tighten the lock nut and make sure that the compression release clearance is not too wide. Turn the engine by hand and check to see that the valves do not touch the top of the pistons.

7. Install the covers on the valve cover.

IMPORTANT

DO NOT engage the compression release lever when the engine is running. To do so will cause serious damage to the engine.

I–2081–1095

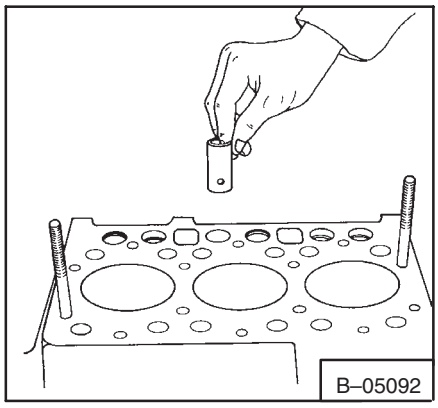

Fig. 7C–46 Removing The Tappets

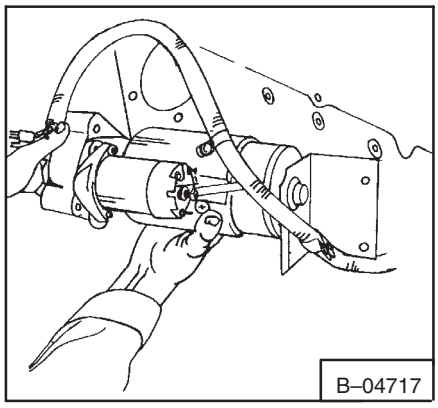

Fig. 7C–47 Removing The Starter

7C–5 REPAIRING THE ENGINE

See Paragraph 7C–4.1 to remove the cylinder head. Then remove the tappets (Fig. 7C–46) and the starter (Fig. 7C–47) from the engine. See Paragraph 7C–2.3 to remove the injection pump.

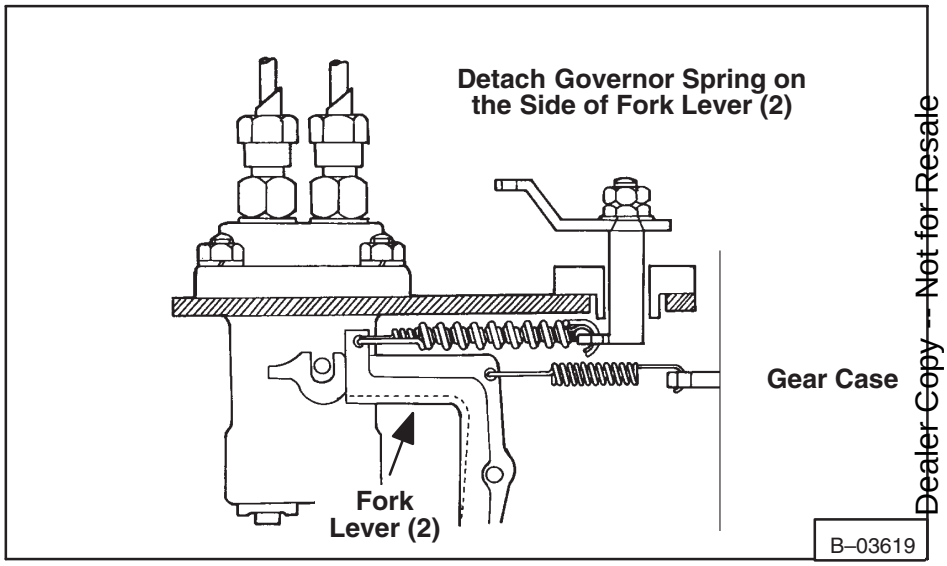

Fig. 7C–48 Removing The Governor Spring

7C–5.1 Removing The Gear Case

1. Remove the governor spring from the governor fork (Fig. 7C–48 and 7C–49).

2. Remove the plate for speed control and governor spring (Fig. 7C–50).

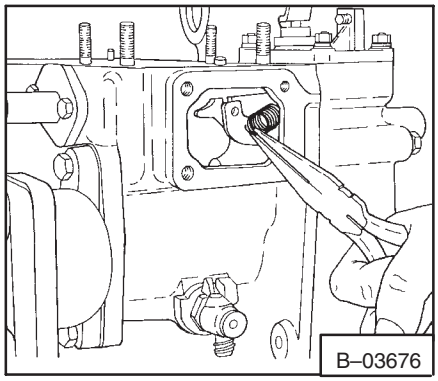

Fig. 7C–49 Removing The Governor Spring

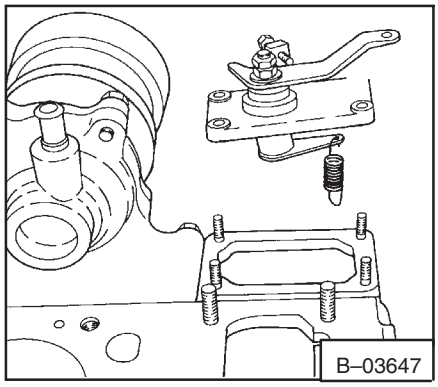

Fig. 7C–50 Removing Speed Control Plate

3. Remove the start spring from the gear case (Fig. 7C–51 and 7C–52).

4. Straighten the washer on the crankshaft sheave. Remove the nut and washer.

5. Use a puller and remove the engine crankshaft sheave (Fig. 7C–53).

6. Remove the key.

7. Remove the bolts from the gearcase.

8. Remove the gear case (Fig. 7C–54) and the O–ring.

7C–5.2 Removing The T iming Gear, Camshaft And Oil Pump

1. Remove the crankshaft collar, O–ring, oil slinger and the gear collar (Fig. 7C–55).

2. Remove the snap ring on the idler gear.

3. Remove the idler gear (Fig. 7C–56).

4. Remove the idler gear collar from the shaft.

5. Straighten the washer on the bolt for the camshaft stop.

6. Remove the bolt for the camshaft stop.

7. Remove the camshaft (Fig. 7C–57).

8. Remove the 3 bolts that hold the fork lever on the fuel camshaft.

9. Remove the stop for the fuel.

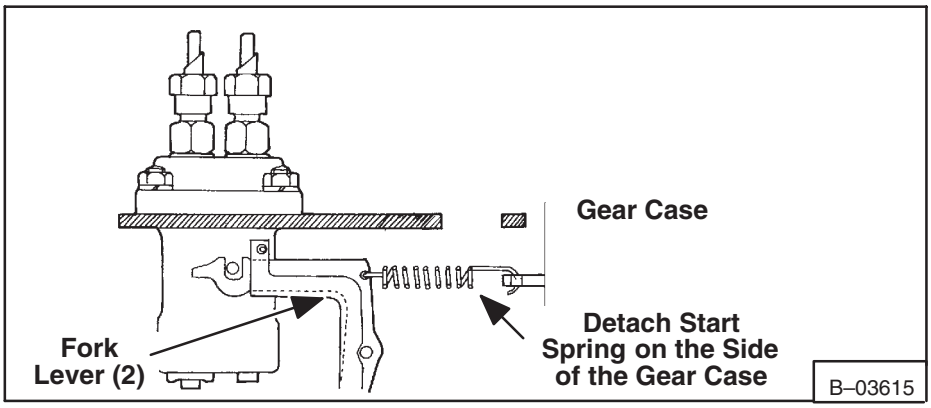

Fig. 7C–51 Removing The Start Spring

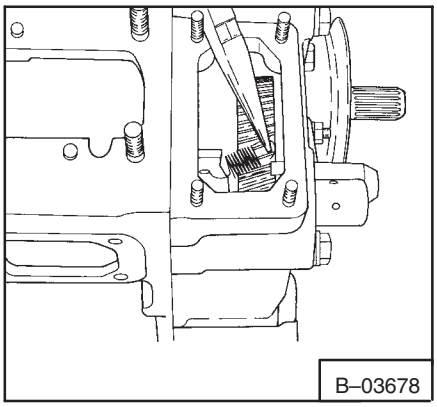

Fig. 7C–52 Removing The Start Spring

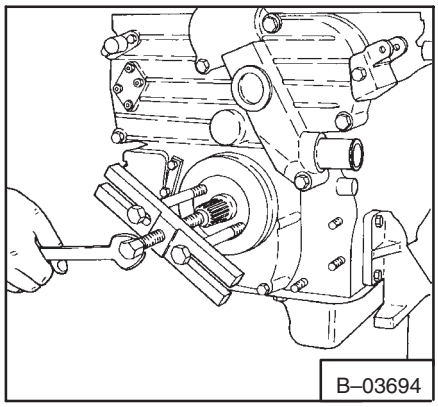

Fig. 7C–53 Removing Crankshaft Sheave

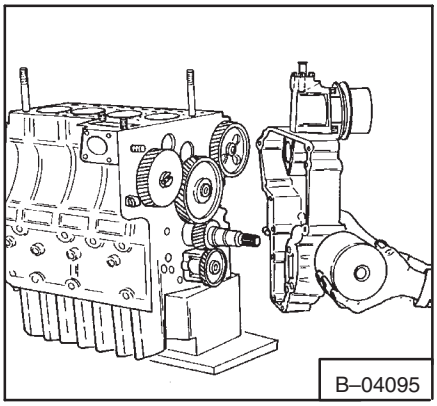

Fig. 7C–54 Removing The Gear Case

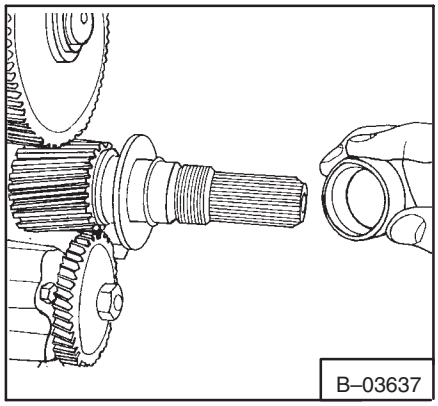

Fig. 7C–55 Removing Crankshaft Collar

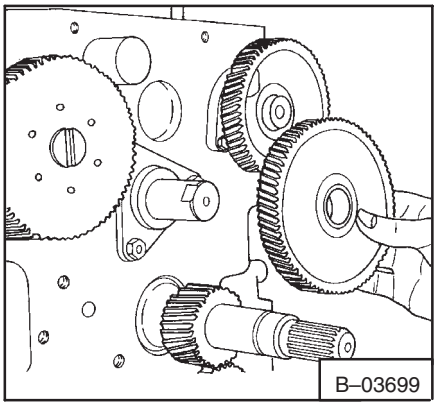

Fig. 7C–56 Removing The Idler Gear

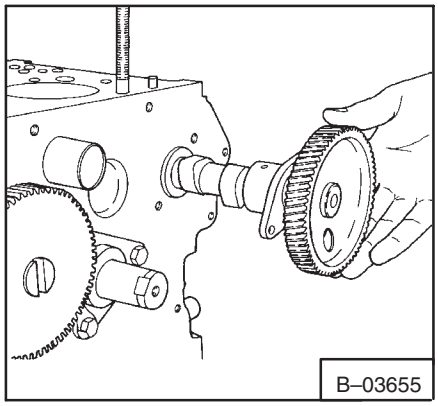

Fig. 7C–57 Removing The Camshaft

10. Remove the fuel camshaft and the fork lever at the same time (Fig. 7C–58).

11. Remove the crankshaft gear with a puller (Fig. 7C–59).

12. Remove the key.

13. Straighten the washer on the gear of the oil pump.

14. Remove the bolt on the gear of the oil pump.

15. Remove the pump gear.

16. Remove the oil pump bolts.

17. Remove the oil pump (Fig. 7C–60).

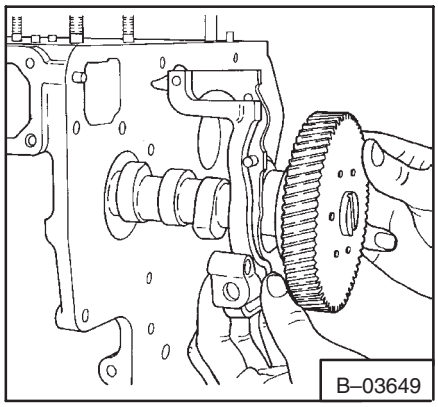

Fig. 7C–58 Removing Fuel Camshaft

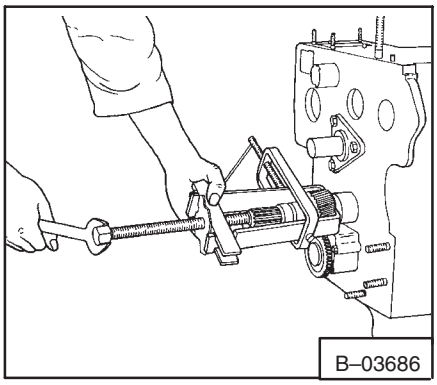

Fig. 7C–59 Removing The Crankshaft Gear

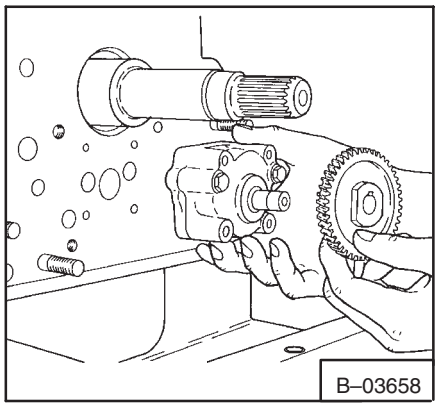

Fig. 7C–60 Removing Oil Pump

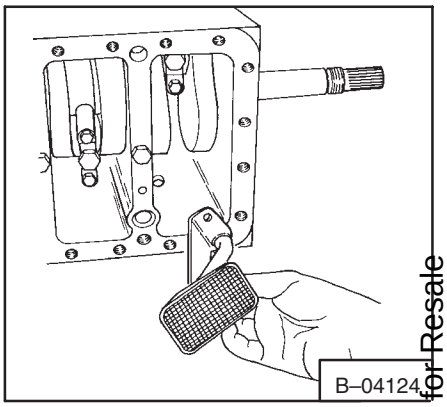

Fig. 7C–61 Remove Oil Screen

7C–5.3 Removing Pistons And Crankshaft

1. Remove the oil pan.
2. Remove the oil screen (Fig. 7C–61). Be careful not to damage the O–ring.
3. Remove the connecting rod bolts.
4. Remove the cap and the bearing from the connecting rod (Fig. 7C–62).
5. Remove the piston from the engine block (Fig. 7C–63).

NOTE: Make sure the pistons are marked so they will be returned to the same cylinder.

6. Straighten the washers on the flywheel bolts.
7. Remove the bolts from the flywheel.
8. Use a puller to remove the flywheel.
9. Straighten the washers on the bolts that hold the main bearing in position.

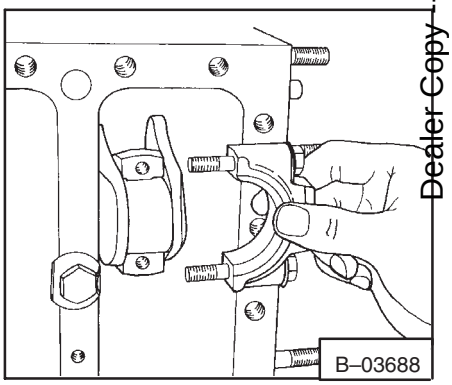

Fig. 7C–62 Removing Connecting Rod Cup

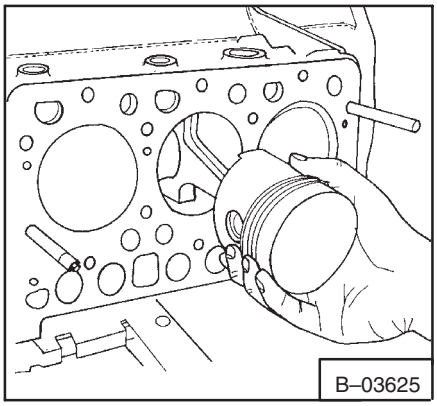

Fig. 7C–63 Removing The Pistons

10. Remove the main bearing bolts from the engine block (Fig. 7C–64).

11. Straighten the washer on the bolts that hold the main bearing in position.

12. Remove the bolts.

13. Install two bolts in the cover and pull the rear cover out (Fig. 7C–65).

14. Remove the crankshaft from the rear of the engine (Fig. 7C–66). Make sure you do not damage the crankshaft.

15. Straighten the washers on the bolts of the main bearings.

16. Remove the bolts (Fig. 7C–67) from the bearing cap halves.

17. Remove the halves of the main bearings.

NOTE: When installing the bearing cap halves, make sure to position the markings (on the bearing caps) toward the flywheel. Thrust washers must be installed with oil grooves facing outward.

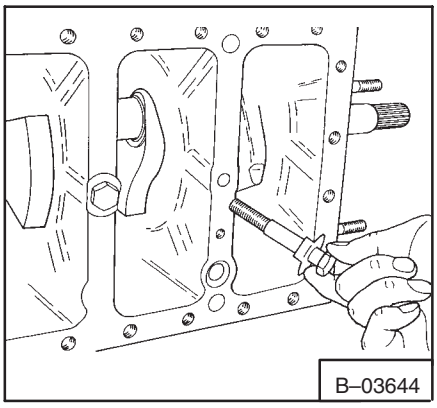

Fig. 7C–64 Removing The Main Bearing

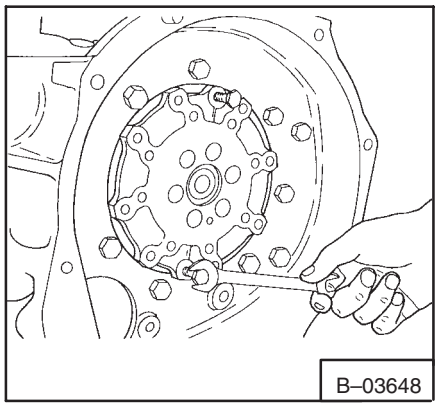

Fig. 7C–65 Removing The Bearing Cover

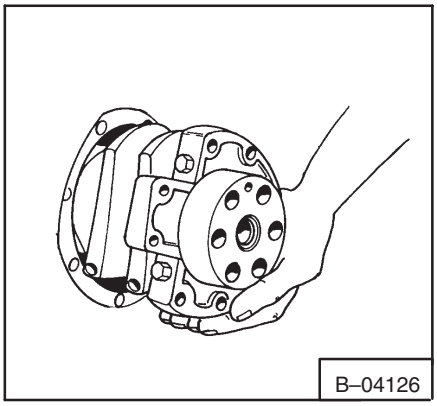

Fig. 7C–66 Removing The Crankshaft

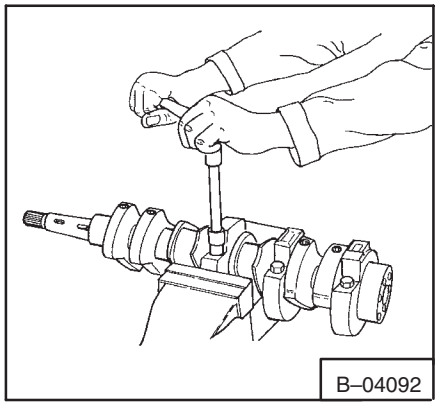

Fig. 7C–67 Removing The Main Bearings

7C–5.4 Servicing The Timing Gear And Camshaft

1. Measure the camshaft bearing on the engine block (Fig. 7C–68). The specification is 1.5748 – 1.5758 inch (40 – 40,041 mm). The allowable wear limit is 0.002 – 0.0036 inch (0,05 – 0,09 mm).

2. Measure the camshaft journal (Fig. 7C–69). The specification is 1.5722 – 1.5728 inch(39,934 – 39,950 mm). The allowable wear limit is 0.002 – 0.0036 inch (0,05 – 0,09 mm).

3. If the measurements are not within the specifications replace the needed parts.

4. Put the camshaft on v–blocks.

5. Put a dial gauge on the journal.

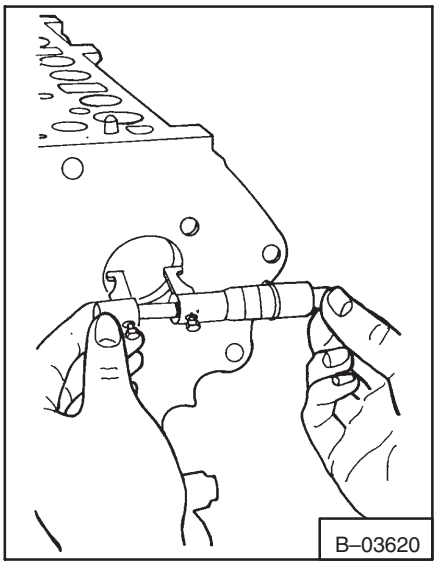

Fig. 7C–68 Camshaft Specifications

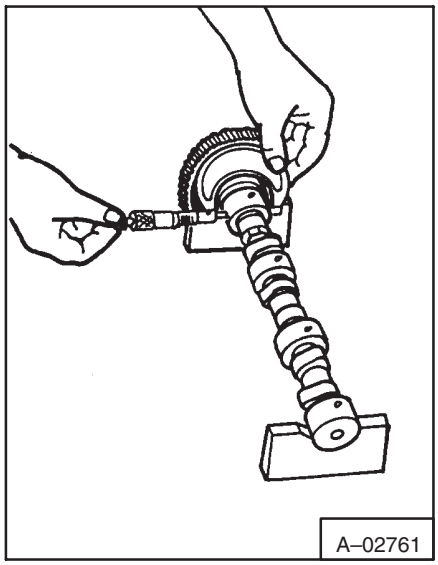

Fig. 7C–69 Camshaft Specifications

6. Turn the camshaft at a slow rate (Fig. 7C–70). The allowable wear limit is 0.0008 inch (0,02 mm).

7. If the camshaft measurements are more than the specifications replace the needed parts.

8. Make a measurement of the highest point on each camshaft lobe (Fig. 7C–71).

9. The specifications are 1.3134 inch (33,36 mm). The allowable wear limit is 1.3115 inch (33,31 mm).

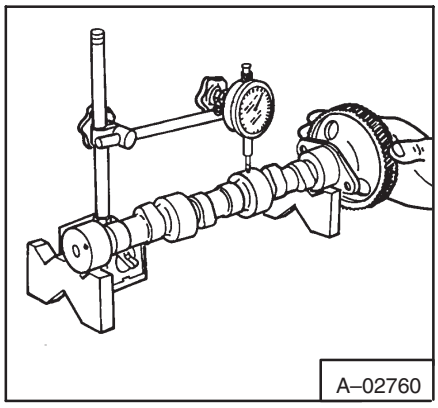

Fig. 7C–70 Camshaft Alignment

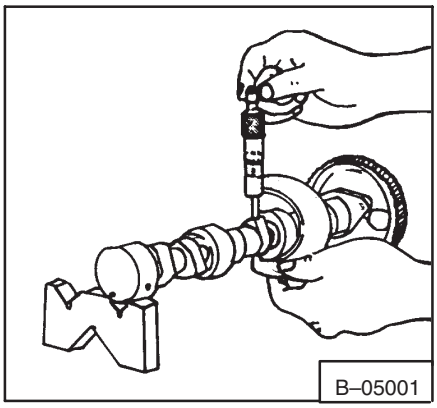

Fig. 7C–71 Camshaft Lobe Measurement

NOTE: After the crankshaft is installed check the clearance for the camshaft gear.

10. Install a dial gauge.

11. Hold one gear while turning the other gear (Fig. 7C–72).

12. The specification is 0.0016 to 0.0045 inch (0,041 to 0,1 15 mm). The allowable wear limit is 0.0118 inch (0,3 mm).

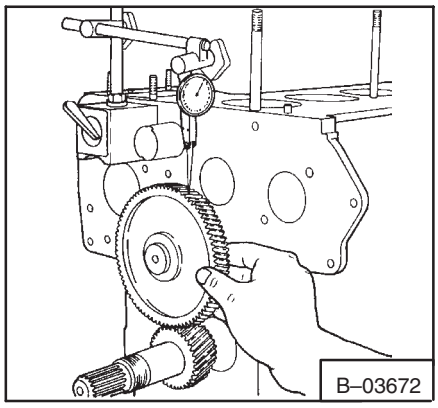

Fig. 7C–72 Camshaft Gear Clearance

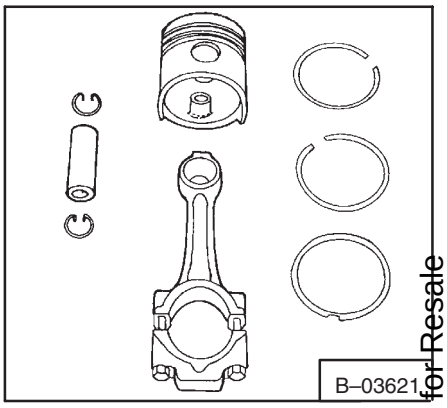

Fig. 7C–73 Piston Assembly

7C–5.5 Servicing The Connecting Rods And Pistons

1. Remove the piston rings.

2. Remove the pin (Fig. 7C–73).

NOTE: Make sure to mark the piston and the connecting rod so they are assembled the correct way. (See Page 7–22, Paragraph 7C–6.2 and Fig. 7C–96).

3. Measure the piston pin hole with an inside micrometer (Fig. 7C–74).

4. The specifications are 0.0955–0.9060 inch (23–23,013 mm). The allowable wear limit is 0.9076 inch (23,053 mm).

5. Measure the piston pin with a micrometer (Fig. 7C–75).

6. Measure the connecting rod bushing.

7. The specifications are as follows:

   New Engine; 0.0006/0.0015 inch (0,015/0,04 mm)
   Service Parts; 0.0006/0.0026 inch (0,015/0,07 mm)

   Allowable Wear Limit: 0.006 inch (0,15 mm)

NOTE: Drill oil hole in bushing after installation.

8. Put the piston ring in the cylinder . Use the piston to push the ring to the bottom of the cylinder.

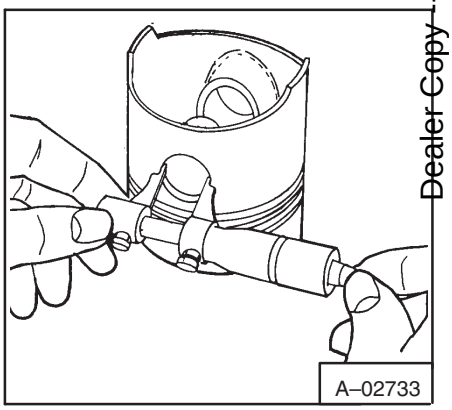

Fig. 7C–74 Piston Specifications

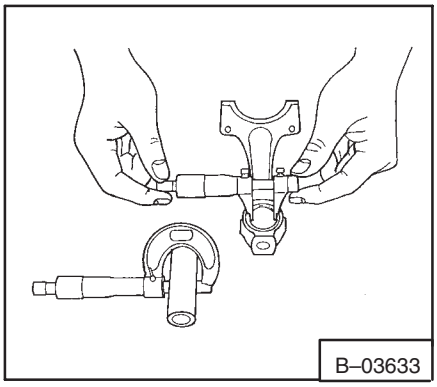

Fig. 7C–75 Piston Pin And Connecting Rod

9. Measure the clearance with a feeler gauge (Fig. 7C–76).

10. The specification is 0.0018 –0.0177 inch (0,30 – 0,45 mm). The allowable wear limit is 0.0492 inch (1,25 mm). Replace the ring as needed.

11. Install the connecting rod on the tool for connecting rod alignment.

12. Measure the clearance at the piston pin area (Fig. 7C–77).

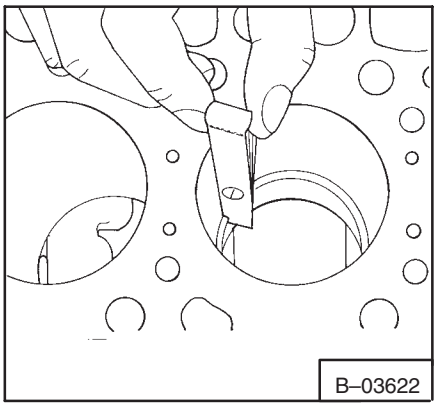

Fig. 7C–76 Piston Ring Clearance

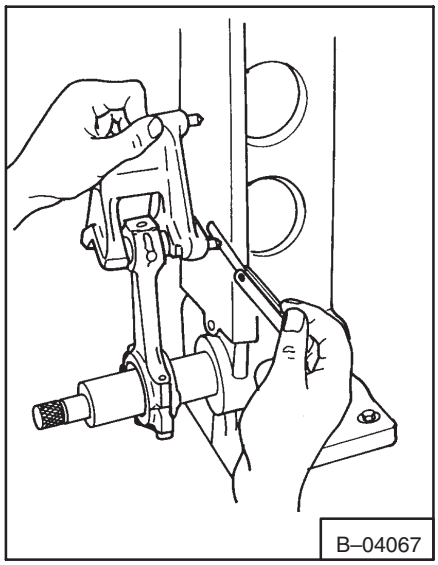

Fig. 7C–77 Connecting Rod Alignment

NOTE: Make sure the bushing diameter of the connecting rod is in specification.

13. The specifications are 0.0008 inch (0,02 mm). The allowable wear limit is 0.0020 inch (0,05 mm).

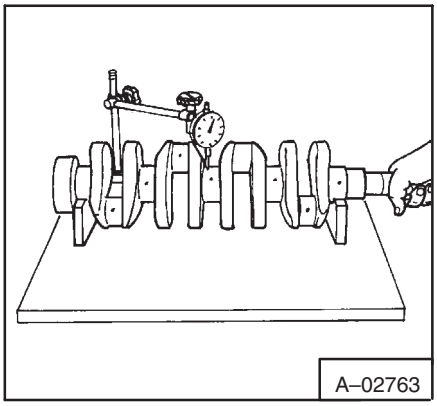

Fig. 7C–78 Camshaft Alignment

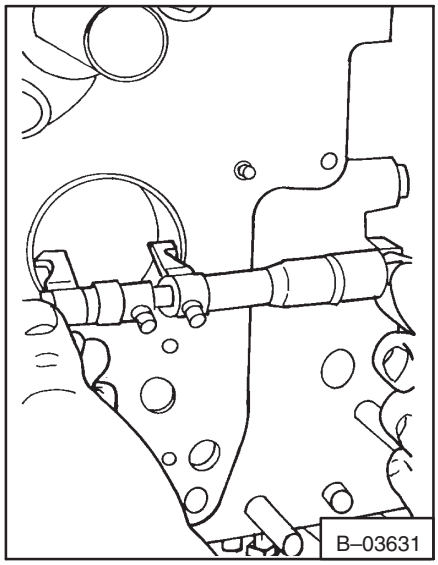

Fig. 7C–79 Checking Clearance

7C–5.6 Servicing The Crankshaft

1. Put the crankshaft on v–blocks.

2. Put a dial gauge on the center journal (Fig. 7C–78). Turn the crankshaft at a slow rate.

3. The specifications are 0.0008 inch (0,02 mm). The allowable wear limit is 0.0031 inch (0,08 mm). Replace as needed.

4. Measure the #1 crankshaft journal (Fig. 7C–79). The specification is 2.0465 – 2.0488 inch (51,980 – 52,039 mm). The allowable wear limit is 0.0079 inch (0,2 mm).

5. Measure the inside diameter of the crankshaft bearing (Fig. 7C–8). The specification is 2.0441 – 2.0449 inch (51,921 – 51,940 mm). The allowable wear limit is 0.0079 inch (0,2 mm). Replace as needed.

6. Put a piece of plastic gauge on the crankshaft main bearing.

7. Install the main bearing on the journal and tighten the bolts 21 – 25 ft.–lbs. (29,4 – 34,3 Nm) torque.

NOTE: DO NOT turn the bearing.

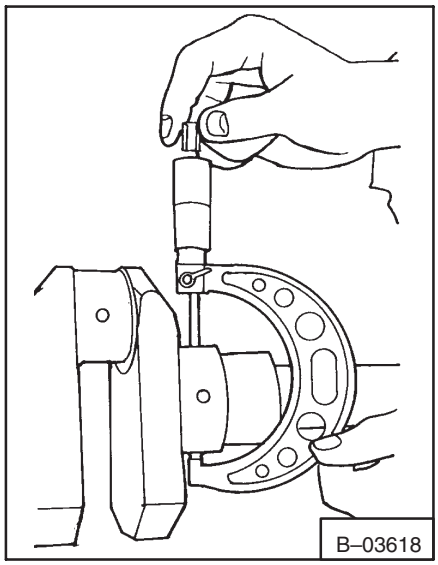

Fig. 7C–80 Checking Clearance

8. Remove the main bearing and measure the plastic gauge (Fig. 7C–81).

9. The specification for the outside diameter of the main crankshaft journal is 2.0441 – 2.0449 inches (51,921 – 51,940 mm). The inside diameter of the crankshaft main bearing is 2.0465 – 2.0482 inches (51,980 – 52,025 mm). The allowable wear limit of the two items is 0.0079 inch (0,2 mm). Replace the parts as needed.

10. Measure the connecting rod bearings (Fig. 7C–82). The specification is 1.7327 – 1.7343 inch (44,010 – 44,052 mm). The allowable wear limit is 0.0079 inch (0,2 mm). Replace as needed.

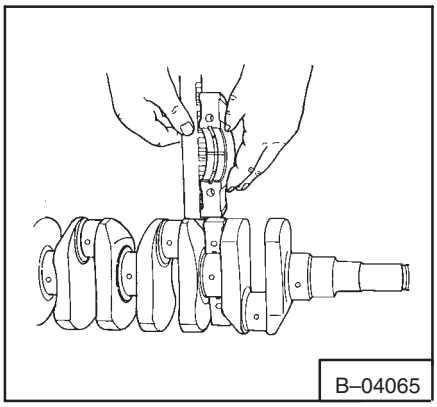

Fig. 7C–81 Checking Main Bearings

11. Measure the connecting rod crankpins (Fig. 7C–83). The specification is 1.7307 – 1.7313 inches (43,959 – 43,975 mm). The allowable wear limit is 0.0079 inch (0,2 mm). Replace as needed.

12. If the crankpins are not to specifications grind them (Fig. 7C–84).

    (a) Crankshaft corner radius (A) must be 0.1378R + 0.0079 inch (3,5R + 0,2 mm).

    (b) The oil hole (B) must be chamfered to 0.0394 to 0.0591R inch (1–1,5R mm).

See Specifications Page 8C – 4 for each undersize.

13. When the crankshaft is installed the end play can be checked (Fig. 7C–85). If the endplay is more than 0.0059 – 0.0122 inch (0,15 – 0,31 mm) replace the thrust bearings on the main bearing.

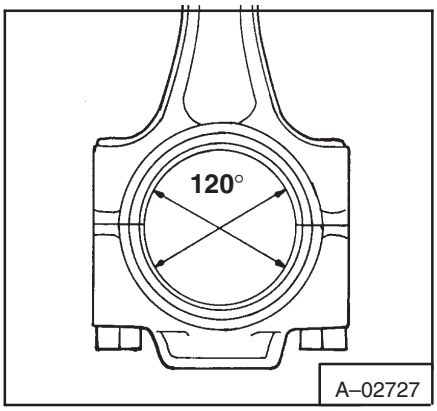

Fig. 7C–82 Checking Rod Bearings

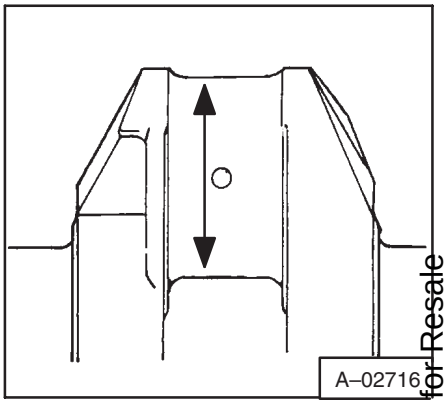

Fig. 7C–83 Checking Journals (Crankpin)

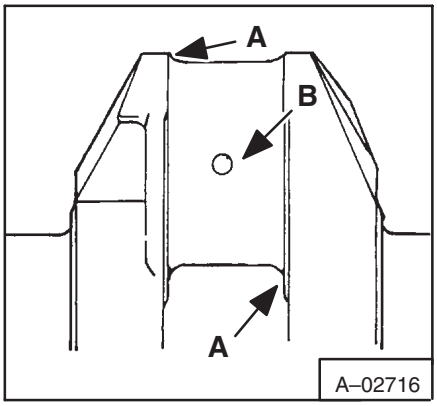

Fig. 7C–84 Connecting Rod Journal

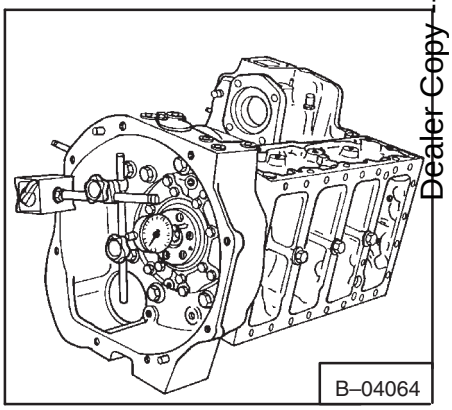

Fig. 7C–85 Checking Crankshaft Endplay

7C–5.7 Servicing The Cylinder Liners

1. Use a micrometer to measure the inside diameter of the cylinder liner (Fig. 7C–86).

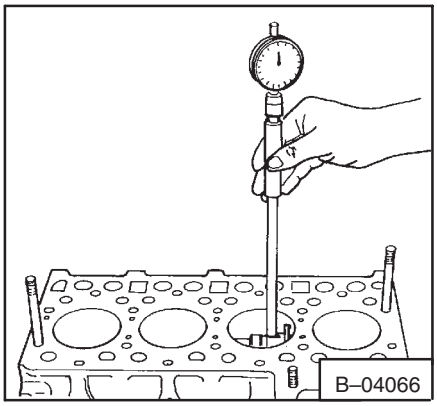

Fig. 7C–86 Checking Cylinder Wear

2. To find the maximum wear measure inside diameter of the cylinder liner in three different locations (Fig. 7C–87). The inside diameter specification on the cylinder liner is 3.3465 – 3.3473 inches (85 – 85,022 mm), with an allowable wear limit of +0.0059 inch (+0,15 mm).

3. When the cylinder has more wear than the specifications, bore and hone the cylinder to 0.0197 inch (0,5 mm) until the oversize diameter is correct (See Specifications Page 8C–4).

NOTE: Make sure you use the correct oversize pistons and rings.

4. When the cylinder wear is more than the wear limit replace the cylinder liner These are dry cylinder liners.

5. Remove the cylinder liners.

6. Clean and put oil in the holes of the engine block.

7. Clean and put oil on the outside of the cylinder liners.

8. Install the cylinder liners into the engine block with the inside and outside diameter chamfered end down. The top of the liners must be even with the top of the engine block machined surface.

9. After installation, bore and hone the cylinder to standard size (See Specifications Page 8C–4).

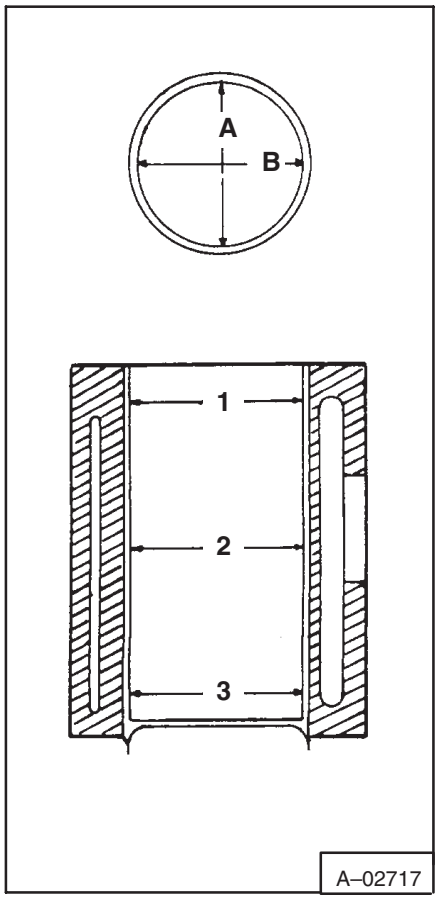

Fig. 7C–87 Cylinder Measuring Points

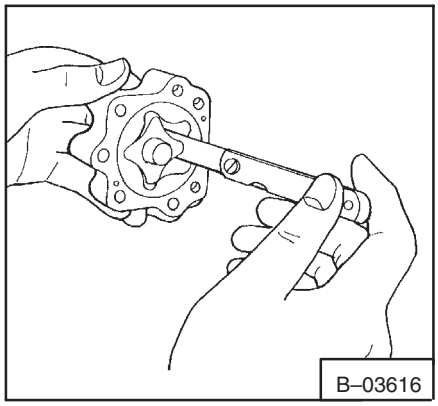

Fig. 7C–88 Checking Clearance

7C–5.8 Servicing The Oil Pump

1. Use a feeler gauge to check the clearance between the inner and outer rotor (Fig. 7C–88).

2. The clearance for the inner rotor is 0.0039 – 0.0063 inch (0,099 – 0,0160 mm). The allowable wear limit is 0.0079 inch (0,2 mm).

3. Use a feeler gauge to check the clearance between the outer rotor and the body of the oil pump (Fig. 7C–89).

4. The clearance for the outer rotor is 0.0043 – 0.0075 inch (0,11 – 0,19 mm).

5. At rated engine speed, the oil pressure is 42 – 56 PSI (294,2 – 392,2 kPa) and must not be any lower than 35 PSI (245,2 kPa).

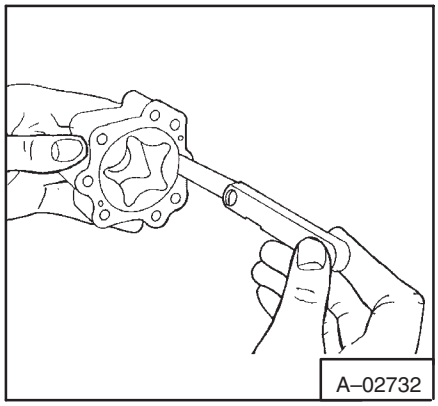

Fig. 7C–89 Checking Clearance

7C–5.9 Servicing The Water Pump

1. Remove the water pump from the gear case (Fig. 7C–90).
2. Put the water pump in a vise and remove the fan and the fan pulley (Fig. 7C–91).
3. Remove the snap ring.
4. Drive the shaft out to the impeller side (Fig. 7C–92) of the water pump.
5. Remove the seal (Fig. 7C–93).
6. Put in a vise and tighten the nut 50–57 ft.–lbs. (68,8 – 78,4 Nm) torque.
7. Install the water pump assembly on the gear case with a new gasket.

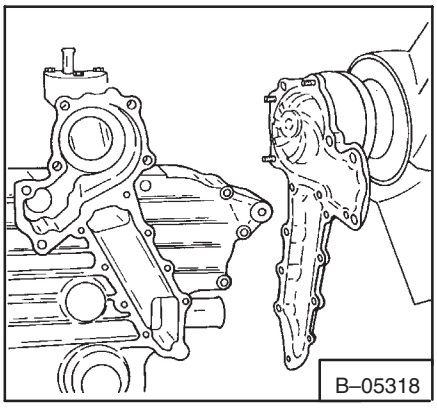

Fig. 7C–90 Removing Water Pump

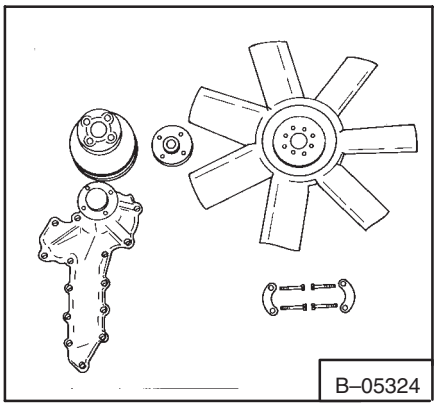

Fig. 7C–91 Removing Pulley

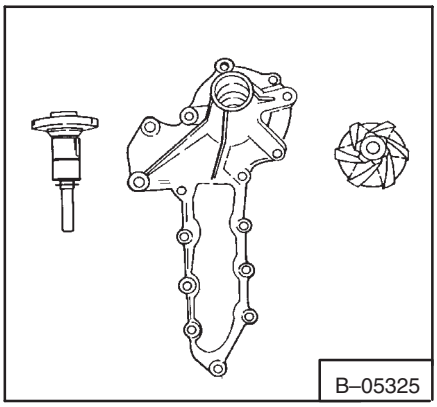

Fig. 7C–92 Removing The Shaft

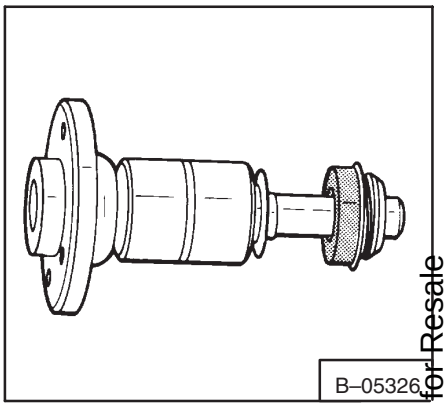

Fig. 7C–93 Installing Seals

7C–6 ASSEMBLY OF THE ENGINE

7C–6.1 Installing The Crankshaft

1. Install the main bearings on the crankshaft journals. Tighten the bolts 21 – 25 ft.–lbs. (29,4 – 34,3 Nm) torque.
2. Install the thrust bearing with oil grooves to the outside.
3. Install the crankshaft in the engine block. Make sure the holes in the main bearings are in alignment with the holes in the engine block (Fig. 7C–94). The main bearings are numbered.
4. Install the main bearing bolts and tighten 47 – 50 ft.–lbs (63,7 – 68,6 Nm) torque.
5. Install new seals in the crankshaft rear cover.
6. Install the rear cover and tighten the bolts 13 to 15 ft.–lbs. (17,7 – 20,7 Nm) torque.

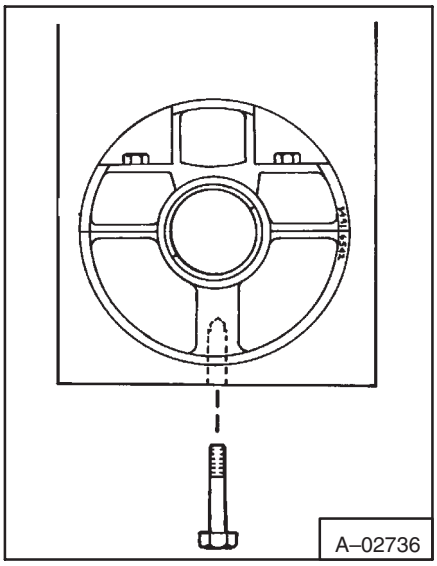

Fig. 7C–94 Alignment Of Holes

7C–6.2 Installing Pistons

1. Assemble the connecting rod to the piston.

NOTE: Make sure the marks on the piston and connecting rod are in the same direction.

2. Install the rings on the piston (Fig. 7C–95). Position the top ring gap towards the camshaft. Position the other rings so there is a gap every 90° with no gap toward the piston pin in the cylinder.

3. Install the pistons in the engine block using a ring compressor. The alignment marks must be opposite the camshaft (Fig. 7C–95).

4. Make alignment of the bearing cap to the connecting rod (Fig. 7C–96).

NOTE: Two types of bolts are used. Install in matched pairs only. Do not mix on same rod.

5. Put oil on the bolts and tighten (13 mm head size bolts) 26 – 30 ft.–lbs. (36,3 – 41,2 Nm) torque; (12 mm head size bolts) 33 – 36 ft.–lbs. (45 – 49 Nm) torque (Fig. 7C–95A).

6. Install the oil pump tube and screen.

7. Put a new gasket on the oil pan and install the oil pan.

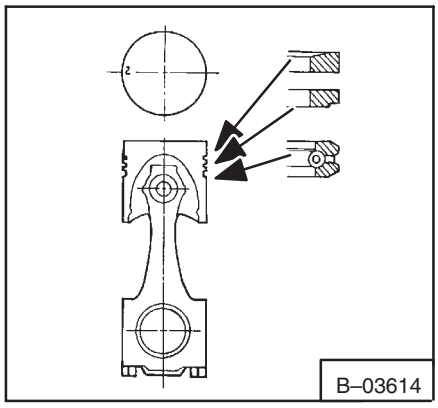

Fig. 7C–95 Installing Rings

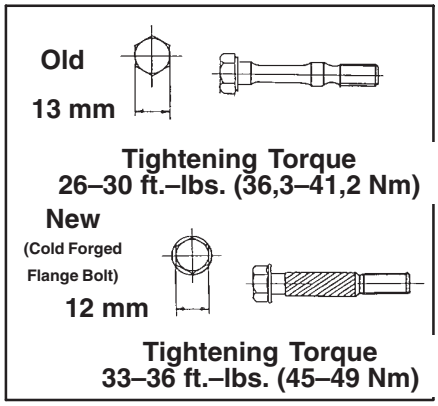

Fig. 7C–95A Rod Bolts

7C–6.3 Installing The Camshaft And Timing Gears

1. Install the oil pump and tighten the bolts 5 – 6 ft.–lbs. (7,8 – 9,3 Nm) torque (Fig. 7C–97).

2. Install the gear and tighten the nut.

3. Install the key and gear on the crankshaft.

4. Install the fuel camshaft and fork lever at the same time (Fig. 7C–98).

5. Install the stop bolt on the fork lever and tighten 5 – 6 ft.–lbs. (7,8 – 9,3 Nm) torque.

6. Install the bolts and tighten 13 – 15 ft.–lbs. (17,7 – 20,6 Nm) torque.

7. Install the camshaft and tighten the bolts 13 – 15 ft.–lbs. (17,7 – 20,6 Nm) torque (Fig. 7C–99).

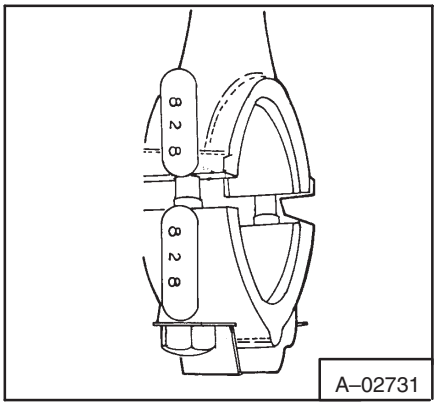

Fig. 7C–96 Installing Rod Bearing Caps

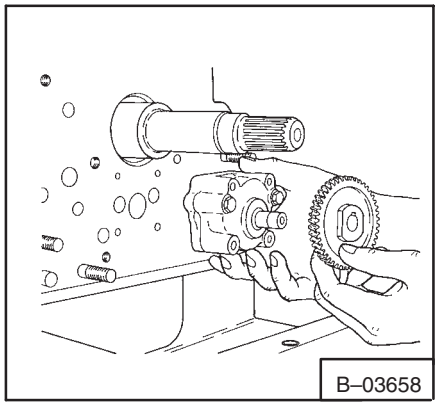

Fig. 7C–97 Installing Oil Pump

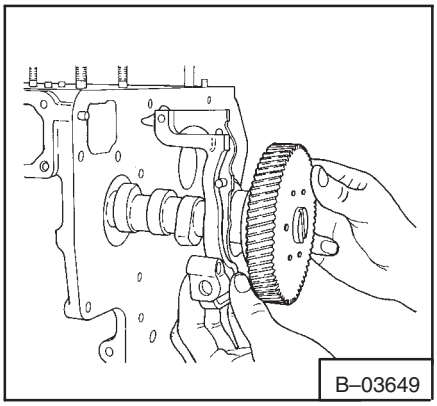

Fig. 7C–98 Installing Fuel Camshaft

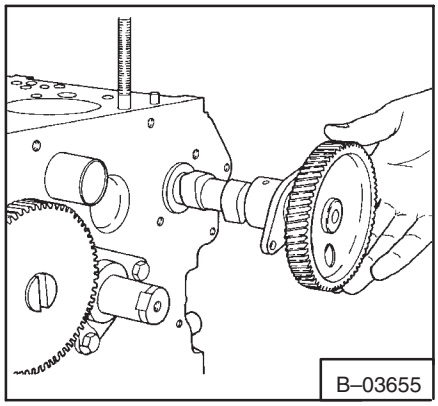

Fig. 7C–99 Installing Camshaft

8. Install the idler gear (Fig. 7C–100).

9. Make sure the timing marks are in correct alignment (Fig. 7C–101).

10. Install the snap ring on the idler gear shaft.

11. Install the oil slinger. Put oil on the O–ring and install the O–ring and the collar (Fig. 7C–102).

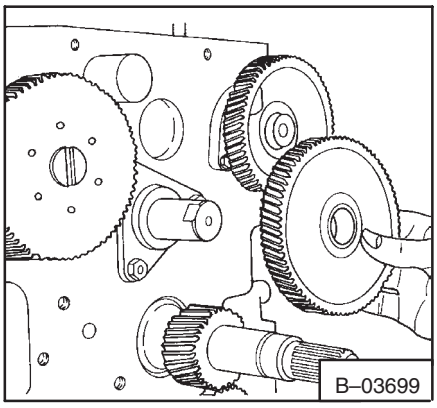

Fig. 7C–100 Installing Idler Gear

7C–6.4 Installing The Gear Case Cover

1. Install the O–rings and oil seal in the gear case cover (Fig. 7C–103). Put oil on the oil seal.

2. Install the gear case cover and tighten the bolts 13 – 15 ft.–lbs. (17,7 – 20,6 Nm) torque.

3. Install the crankshaft sheave and tighten the nut.

4. Install the start spring (Fig. 7C–104).

5. Install the speed control plate and governor spring (Fig. 7C–105).

NOTE: Make sure you do not drop the governor spring into the gear case.

6. Connect the governor spring (Fig. 7C–106).

See Paragraph 7C–2.3 to install the injection pump.

See Paragraph 7C–4.5 to install the cylinder head.

See Paragraph 7C–3.2 to install the engine in the loader.

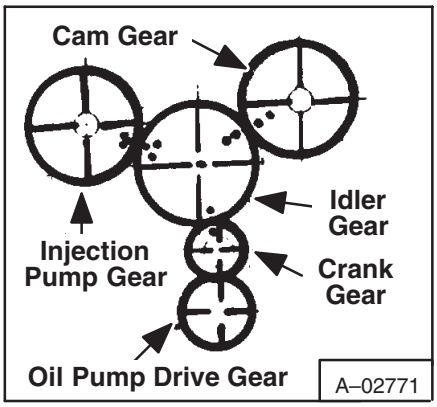

Fig. 7C–101 Timing Marks

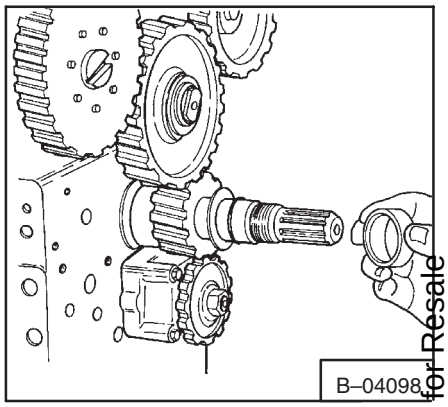

Fig. 7C–102 Installing O–ring

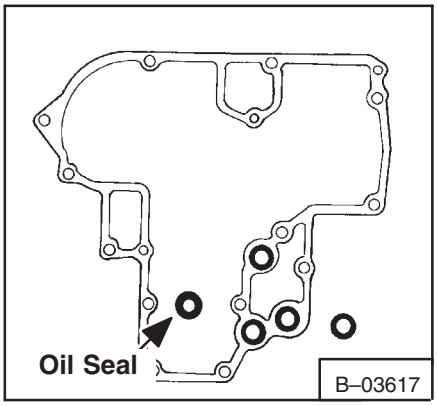

Fig. 7C–103 Installing O–rings

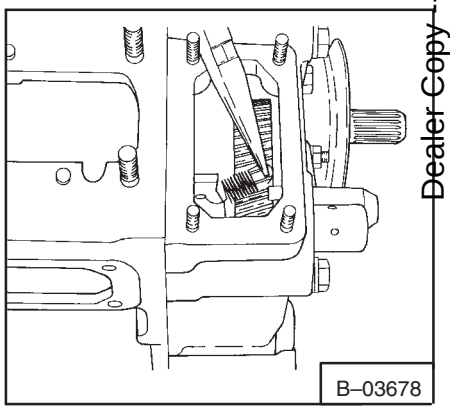

Fig. 7C–104 Installing Start Spring

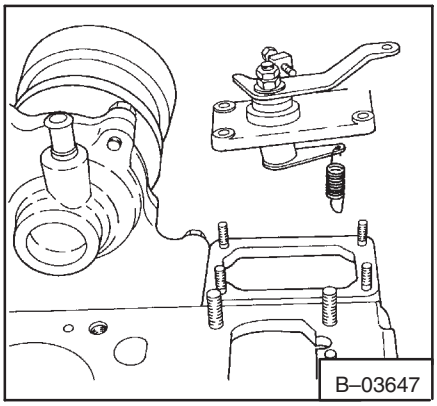

Fig. 7C–105 Installing Speed Control

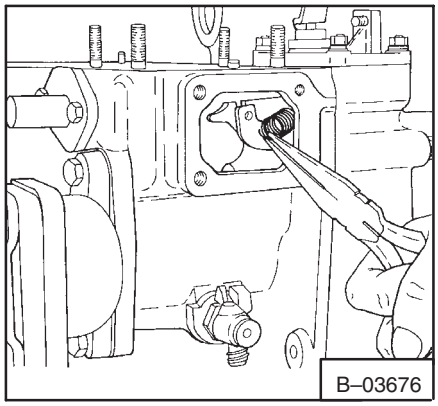

Fig. 7C–106 Connecting Governor Spring

7C–7 UNIVERSAL JOINT

7C–7.1 Removing The U–Joint

1. Remove the engine (See Section 7C–2).
2. Remove the bolts holding the U–joint to the flywheel.
3. Remove the U–joint.

7C–7.2 Installing The U–Joint

1. Install the U–joint.
2. Put LOCTITE on the four bolts and install the bolts.
3. Tighten the bolts 270 – 300 in.–lbs. (31 – 34 Nm) torque.

7C–8 FLYWHEEL

7C–8.1 Removing The Flywheel

1. Remove the U–joint and blower fan.
2. Bend the locking tabs on the bolts.
3. Remove the flywheel bolts.
4. Remove the flywheel.

7C–8.2 Installing The Flywheel

1. Install the flywheel.
2. Install the bolts and tighten 72 – 80 ft.–lbs. (98 – 108 Nm) torque.
3. Bend the locking tabs over the the bolt heads.
4. Install the U–joint mounting plate.
5. Put LOCTITE on the bolts and install the bolts and tighten 180 – 200 in.–lbs. (20 – 23 Nm) torque.

7C–9 MUFFLER

7C–9.1 Removing The Muffler

1. Remove the rear grill.
2. Remove the exhaust pipe from the muffler (Fig. 7C–107).
3. Remove the bolts holding the muffler on (Fig. 7C–108).
4. Installation is the reverse of removal.

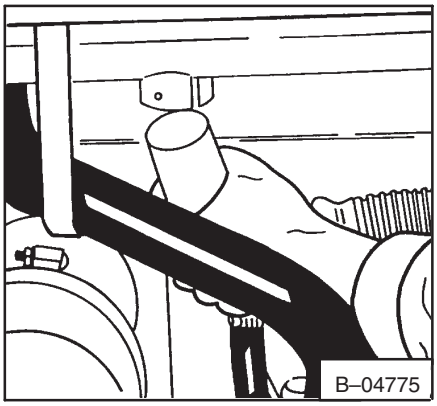

Fig. 7C–107 Removing Exhaust Pipe

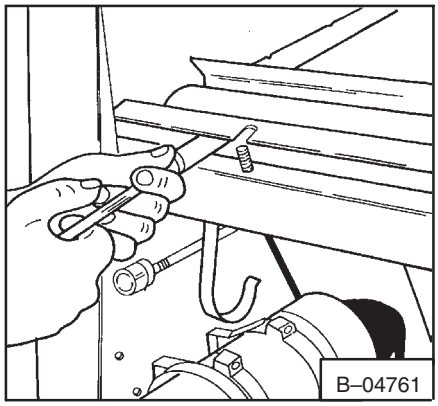

Fig. 7C–108 Removing Muffler Bolts

7C–10 RADIATOR

7C–10.1 Removing The Radiator

1. Remove the panel from the blower housing (Fig. 7C–109).

2. Loosen the hose clamp on the overflow tube (Fig. 7C–110).

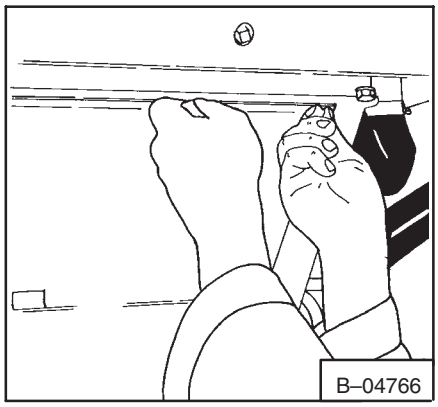

Fig. 7C–109 Removing Panel

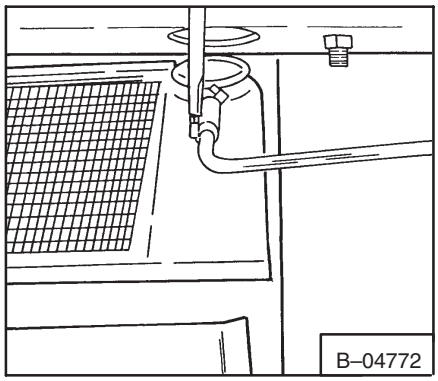

Fig. 7C–110 Removing Clamp From Overflow

3. Drain the coolant tank and loosen the clamp on the overflow tube by the recovery tank and remove the tank (Fig. 7C–111).

4. Remove the overflow tube (Fig. 7C–112).

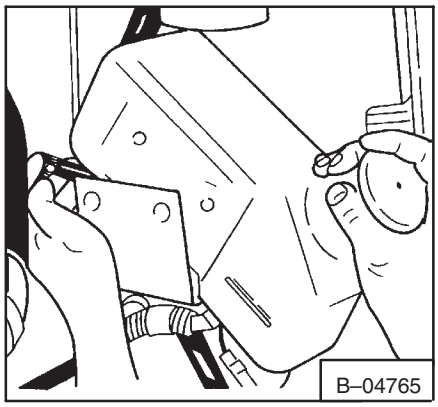

Fig. 7C–111 Removing Coolant Tank

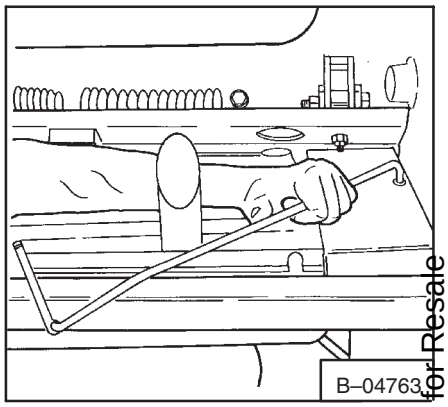

Fig. 7C–112 Removing Overflow Tube

5. Remove the muf fler exhaust pipe.

6. Drain the coolant and remove the inlet radiator hose (Fig. 7C–113).

7. Remove the outlet radiator hose (Fig. 7C–114).

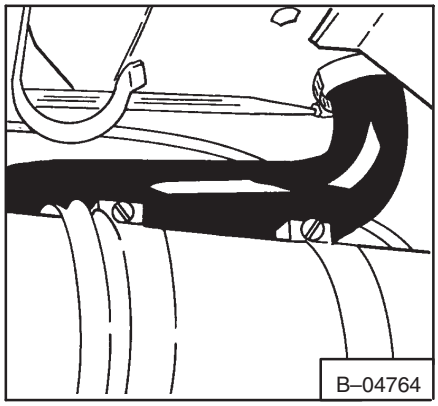

Fig. 7C–113 Removing Inlet Hose

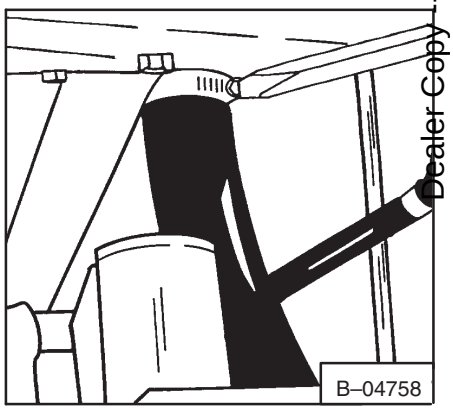

Fig. 7C–114 Removing Hose

8. Remove both the inlet and the outlet tubelines from the oil cooler (Fig. 7C–115).

9. Remove the right mounting bolt for the radiator assembly (Fig. 7C–116).

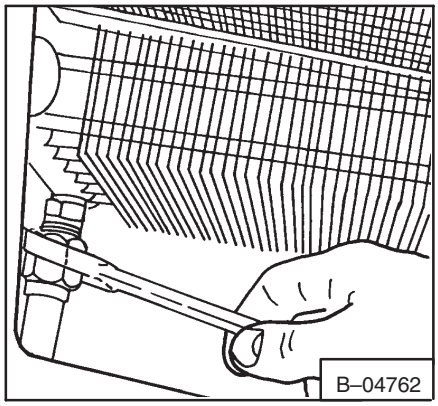

Fig. 7C–115 Removing Tubeline

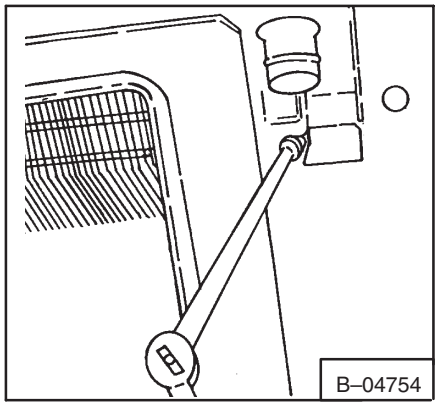

Fig. 7C–116 Removing Bolt

10. Remove the left mounting bolt for the radiator assembly (Fig. 7C–117).

11. Remove the radiator assembly (Fig. 7C–118).

12. Remove the radiator mounting bolts (Fig. 7C–119).

13. Remove the radiator from the assembly.

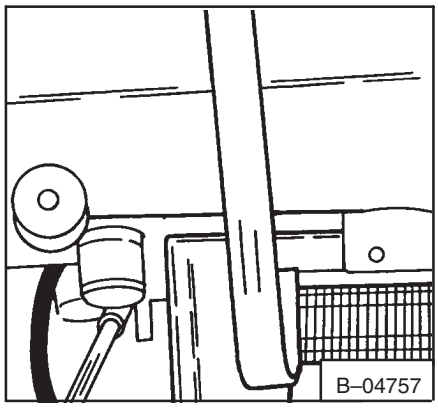

Fig. 7C–117 Removing Bolt

7C–10.2 Installing The Radiator

1. Install the mounting bolts (Fig. 7C–119).

2. Tighten the mounting bolts 180 – 200 in.–lbs. (21 – 23 Nm) torque.

3. Install the radiator assembly (Fig. 7C–118).

4. Install the assembly mounting bolts (Fig. 7C–116 and 7C–117). Tighten the bolts 180 – 200 in.–lbs. (21 – 23 Nm) torque.

5. Install the tubelines tothe oil cooler.

6. Install the two radiator hoses.

7. Install the muffler exhaust pipe.

8. Install the overflow tube and the coolant recovery tank.

9. Connect the overflow tube at both ends and tighten the hose clamps.

10. Install the panel on the blower housing. Tighten the bolts 180 – 200 in.–lbs. (21 – 23 Nm) torque.

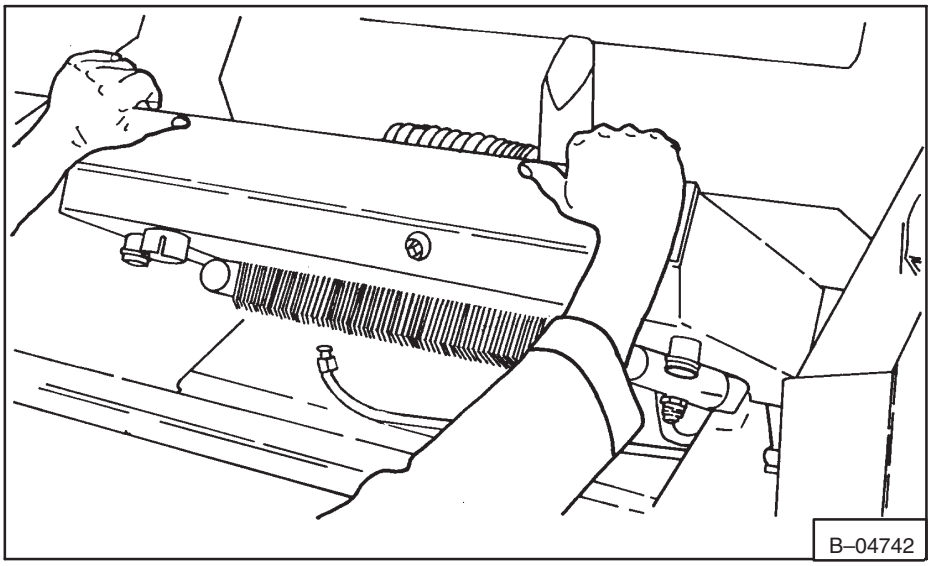

Fig. 7C–118 Removing Radiator Assembly

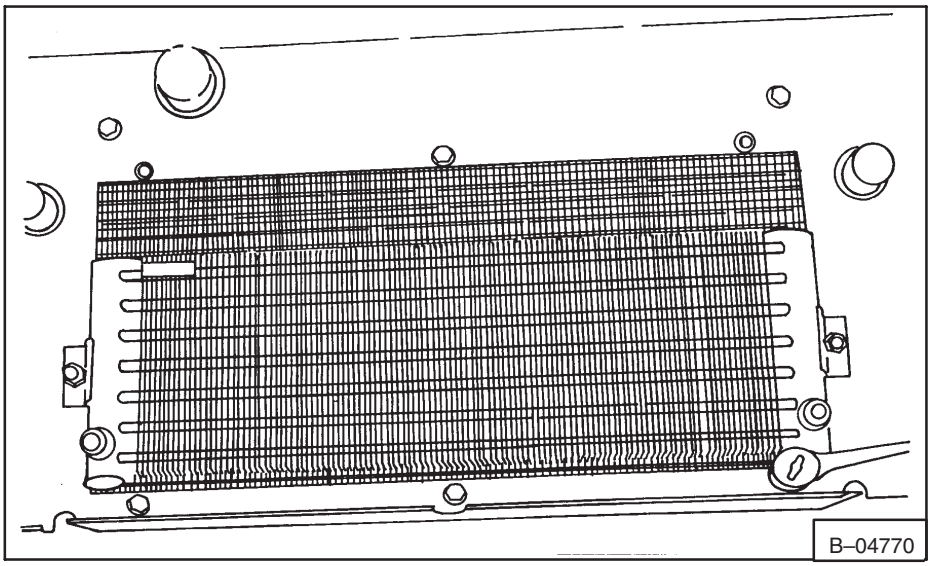

Fig. 7C–119 Removing Mounting Bolts

7C–11 BLOWER HOUSING

7C–11.1 Removing The Blower Housing

1. Remove the engine (See Paragraph 7C–3.1).

2. Remove the radiator, oil cooler assembly (See Paragraph 7C–10.1).

3. Remove the center nut from the blower housing (Fig. 7C–120).

4. Remove the bottom bolt from the blower housing (Fig. 7C–122).

5. Remove the blower housing (Fig. 7C–122).

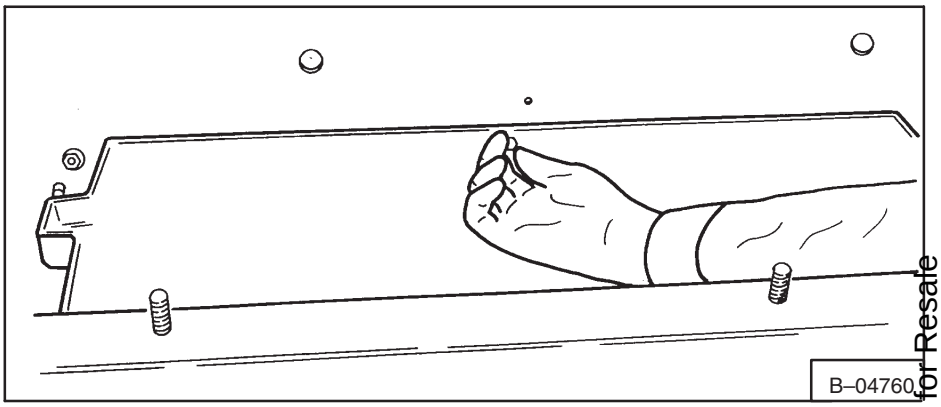

Fig. 7C–120 Removing Center Bolt

7C–11.2 Installing The Blower Housing

1. Install the blower housing and install the bottom bolt (Fig. 7C–122). Tighten the bottom bolt 25–28 ft.–lbs. (34 – 38 Nm) torque.

2. Install the center nut (Fig. 7C–124). Tighten the nut 180 – 200 in.–lbs. (21 – 23 Nm) torque.

3. Install the radiator and oil cooler assembly.

4. Install the engine.

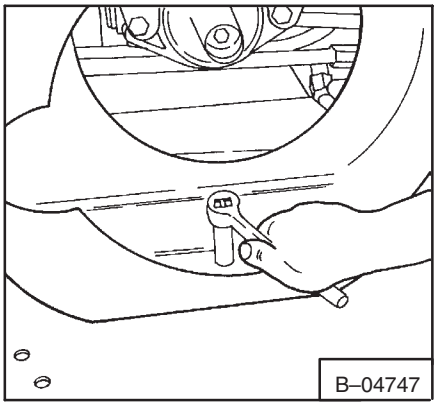

Fig. 7C–121 Removing Bolt

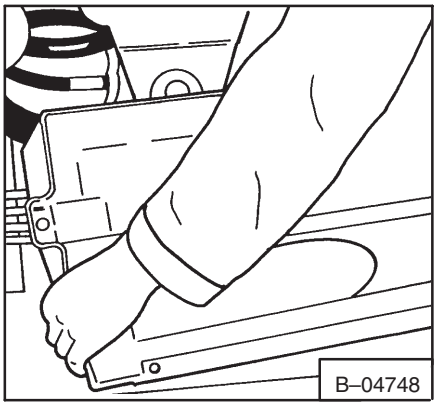

Fig. 7C–122 Removing Blower Housing

7C–12 STARTER

7C–12.1 Removing The Starter

1. Disconnect the battery cables (negative battery cable first).

2. Remove the wires from the starter (Fig. 7C–123). Make note of the wire connections to make sure the wires are connected correctly during assembly.

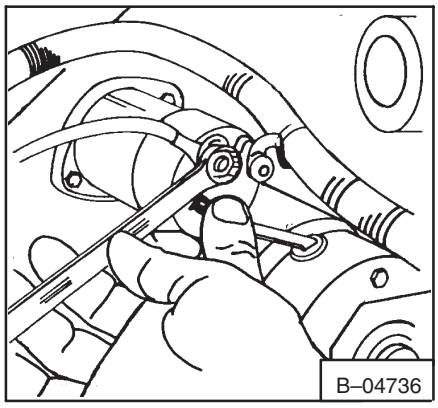

Fig. 7C–123 Removing Starter Wires

3. Remove the starter mounting bolts (Fig. 7C–124) and the starter brake.

4. Remove the starter (Fig. 7C–125).

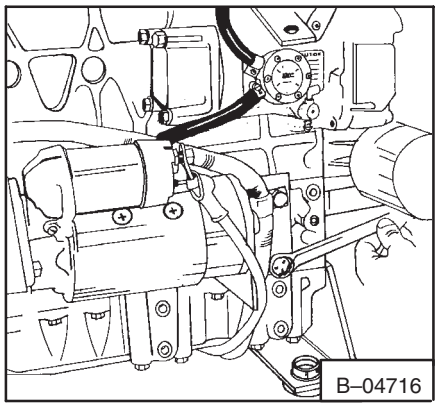

Fig. 7C–124 Removing Mounting Bolts

7C–12.2 Installing The Starter

1. Install the starter (Fig. 7C–125).

2. Install the mounting bolts and tighten 25–28 ft.–lbs. (34 – 38 Nm) torque.

3. Connect the wires to the correct terminals (Fig. 7C–124).

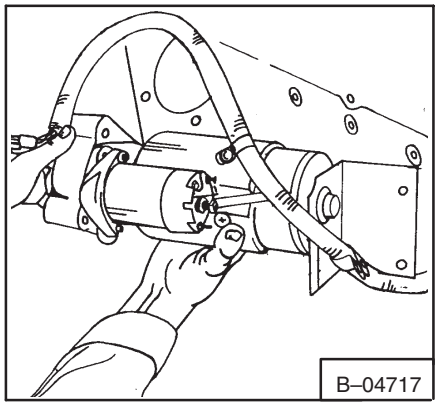

Fig. 7C–125 Removing Starter

TECHNICAL DATA

WARNING

Instructions are necessary before operating or servicing machine. Read Operation & Maintenance Manual, and signs (decals) on machine. Follow warnings and instructions in the manuals when making repairs, adjustments or servicing. Check for correct function after adjustments. repairs or service. Failure to follow instructions can cause injury or death.

W–2144–0189

bobcat®

TECHNICAL DATA (641 DEUTZ)

641 DEUTZ

WARNING

Instructions are necessary before operating or servicing machine. Read Operation & Maintenance Manual, and signs (decals) on machine. Follow warnings and instructions in the manuals when making repairs, adjustments or servicing. Check for correct function after adjustments. repairs or service. Failure to follow instructions can cause injury or death.

W–2144–0189

8A–1 (641 LOADER SPECIFICATIONS)

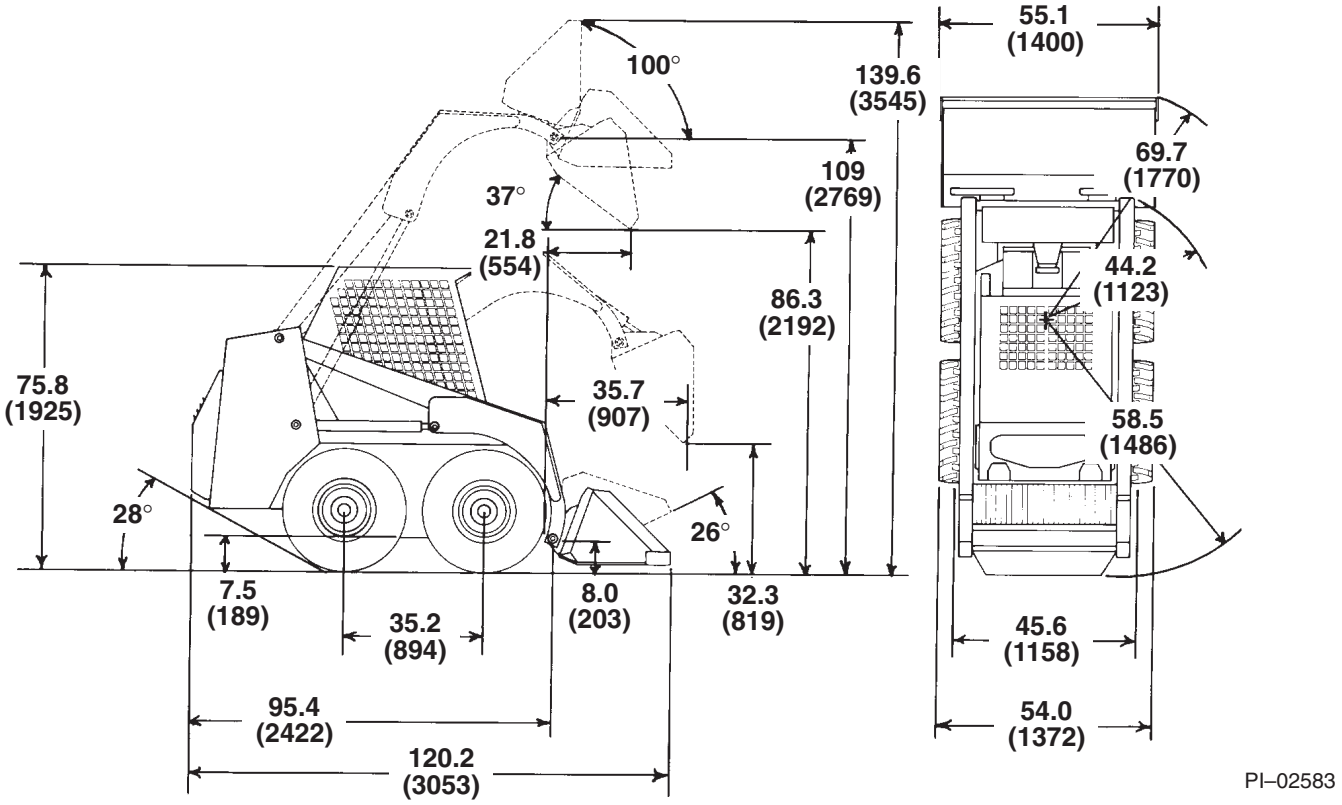

Dimensions are given for loader equipped with standard tires and dirt bucket and may vary with other bucket types. All dimensions are shown in inches. Respective metric dimensions are given in millimeters enclosed by parentheses.

Where applicable specifications conform to SAE standard and are subject to change without notice.

8A–1.1 OPERATION & PERFORMANCE SPECIFICATIONS

This loader was designed for use without counterweights or ballasts. The manufacturer warns that changes of structure or weight distribution of the loader can change the steering and also cause failure of loader parts.

Operating Weight . . . . . 4140 lbs. (1880 kg)
Bucket Capacity (SAE) (54” Dirt) . . . . . 9,84 cu. ft. (0,28 m^3)
Rated Operating Capacity . . . . . 1000 lbs. (454 kg)
Travel Speed . . . . . Infinitely variable 0–6.6 MPH (9,7 Km/hr.)

8A–1.2 ENGINE SPECIFICATIONS

Cylinders 2
Cooling System . . . . . Air
Displacement . . . . . 101 cu. in. (1,65 L)
Horsepower . . . . . 27.6 HP (21 Kw) @ 2500 RPM
Torque . . . . . 65 ft.–lbs. (88 Nm) @ 2000 RPM
Fuel Type . . . . . No. 2 Diesel
Engine Lubrication . . . . . Gear Pump
Crankcase Ventilation . . . . . Open Breathing
Air Cleaner . . . . . Replaceable dry cartridge
Maximum Governed RPM (Full Load) 2500

8A–1.3 HYDRAULIC SYSTEM

Pump Type . . . . . Vane
Pump Capacity . . . . . 9.5 GPM (36 ltr./min.) @ 2500 RPM
Control Valve . . . . . Open center with lift, tilt & auxiliary sections
System Relief Pressure . . . . . 1900 PSI (13100 kPa)
Filtration . . . . . 10 Micron, replaceable cartridge
Hydraulic Fluid Type . . . . . Clark Bobcat Fluid (6563328) 10W–30 or 10W–40
Class SE or SF Motor Oil (5W–30 at temp. below –10°F. [–23°C.])

8A–1.4 HYDRAULIC CYLINDERS . . . . . Doubleacting

Function	Lift	Tilt
Bore	2.0 inch (50,80 mm)	3.250 inch (76,20 mm)
Rod	1.250 inch (31,75 mm)	1.500 inch (38,10 mm)
Stroke	25.0 inch (635 mm)	12.300 inch (312,42 mm)

8A–1.5 HYDROSTATIC TRANSMISSION & FINAL DRIVE

Pump Type . . . . . Inline, axial piston
Pump Displacement . . . . . 2.5 cu. in. (40,96 cm^3)
Motor Type . . . . . Geroler
Motor Displacement . . . . . 19 $in.^3$ (239,5 cm^3)
Final Drive . . . . . Gearbox and roller chains & sprockets in oil bath

8A–1.6 ELECTRICAL

Alternator . . . . . 37 amp. ventilated
Battery . . . . . 12 volt, 600 cold cranking amps., 170 minutes reserve capacity
Starter . . . . . 12 volt, gear drive

8A–1.7 TIRES

Floatation . . . . . 10 x 16.5, 4 ply rating 35 PSI (240 kPa)
Standard . . . . . 7.00 x 15,6 ply rating, 55 PSI (379 kPa)

8A–1.8 FLUID CAPACITIES

Fuel Tank . . . . . 13 gal. (49 Ltr.)
Engine Lube Oil (W/Filter) . . . . . 1 gal. (3,8 Ltr.)
Transmission (Chaincase) . . . . . 20 qt. (19 Ltr.)
Hydraulic/Hydrostatic Reservoir . . . . . 3.5 gal. (13,2 Ltr.)
Hydraulic/Hydrostatic System . . . . . 6 gal. (23 Ltr.)

8A–2 ENGINE SPECIFICATIONS, 641 (Deutz – F2L511)

All specifications are given in inches with metric in parenthesis.

Displacement	100.7 cu. in. (1650 cm^3)
Bore	3.937 (100 mm)
Stroke	4.134 (105 mm)
Firing Order	2–1
Oil Capacity W/Filter	1 gallon (3,79 liters)
Compression Pressure	426–455 PSI (29–31)

NOTE: The cylinders must be within 35 PSI (241 kPa) of each other.

8A–2.1 Fuel System

Pressure of Fuel Lit Pump	4–5 PSI (0,28–0,35 bar)
Make of Fuel Injection Pump	Bosch
Make of Fuel Injection Nozzle	Bosch DLLA 149 S 774
Release Pressure of Injection Nozzle (New)	2604–2720 PSI (180–188 bar)
(Used)	2532–2648 PSI (175–183 bar)
Injection Timing (Start of Injection)	22° B.T.D.C. capillary tube
Distance from Injection Pump Mounting Flange to Camshaft Base Circle (Including gasket and shims)	3.2519–3.2559 (82,6–82,7 mm)

8A–2.2 Governor, Front Cover And Throttle

Distance from Governor Bearing Cup To Engine Block	3.370–3.374 (85,6–85,7 mm)
End Play In Throttle Shaft	0.008–0.43 (0,2–1,1 mm)
Engine High Idle Speed	2625–2675 RPM
Engine Low Idle Speed	1050–1150 RPM

8A–2.3 Cylinder Head And Valves

I.D. of Valve Guides	.3149–.3156 (8,0–8,015 mm)
I.D. of Bore for Exhaust Valve Seat	1.575–1.576 (40,0–40,025)
I.D. of Bore for Intake Valve Seal	1.791–1.792 (45,5–45,525)
Valve Seat Width, Inlet	0.059–0.0826 (1,5–2,1)
Valve Seat Width, Exhaust	0.059–0.0826 (1,5–2,1)
Valve Seat Angle, Exhaust And Intake	45°
Valve Stem Diameter, Intake	0.3128–0.3134 (7,945–7,960)
Valve Stem Diameter, Exhaust	0.3188–0.3126 (7,92–7,94)
Maximum Distance Valves may be Recessed into Head	0.232 (5,9 mm)
Maximum Distance Valves may Protrude from Head	0.205 (5,2 mm)
Valve Clearance, Cold, Intake and Exhaust	0.006 (0,15 mm)
Minimum Free Length of Valve Springs	2.32 (59 mm)
Length of Head Bolts	7.40–7.42 (188–188,5 mm)

8A–2.4 Cylinder, Piston And Connecting Rod

Cylinder Bore (Standard)	3.937–3.9378 (1000,000–100,022 mm)
Maximum Wear Limit	0.012 (0,3 mm)
Piston Diameter (Standard)	3.9354–3.9358 (99,96–99,969)
Piston Diameter (1st oversize)	3.9551–3.9752 (100,461–100,969 mm)
Piston Diameter (2nd oversize)	3.9748–3.9752 (100,960–100,969 mm)
Wrist Pin Bore	1.3781–1.3783 (35,004–35,010)
Wrist Pin Diameter	1.3777–1.3780 (34,994–35,000)
Piston Ring Side Clearance, Top Compression Ring	0.0041–0.0057 (0,105–0,145 mm)

Piston Ring Side Clearance, Oil Ring . . . . . 0.0015–0.0028 (0,040–0,072 mm)
Compression Ring End Gap (Normal) . . . . . 0.0138–0.0216 (0,35–0,55 mm)
Slotted Oil Control Ring End Gap (Normal) . . . 0.0098–0.0157 (0,25–0,40 mm)
Maximum Ring End Gap (All) (Wear Limit) . . . . . .0.079 (2,0 mm)
Piston Crown Clearance (Measure with Lead Wire) 0.039–0.047 (1,0–1,2)

NOTE: The cylinders must be within 35 PSI (241 kPa) of each other.

I.D. of Bore in Connecting Rod for
Wrist Pin Bushing 1.4961–1.4967 (38,000–38,016)
I.D. of Wrist Pin Bushing (Installed) 1.379–1.3811 (35,036–35,080)
I.D. of Bore in Connecting Rod for
Connecting Rod Bearing . . . . . .2.244–2.254 (57,0–57,019 mm)
Connecting Rod Bearing Clearance . . . . . 0.002–0.0043 (0,050–0,108 mm)
Connecting Rod Bearing Clearance (Maximum) 0.012 (0,3)
Connecting Rod Bearing Side Clearance (End Play) 0.007–0.011 (0,170–0,271)
Connecting Rod Bearing Side Clearance (Maximum) . . . . . .0.0236 (0,6 mm)

8A–2.5 Camshaft, Crankshaft, Bearings

Camshaft End Play . . . . . .0.010–0.024 (0,25–0,6 mm)
I.D. of Camshaft Bushing 1.8902–1.8922 (48,01–48,064)
Diameter of Crankpin, Standard 2.046–2.0468 (51,971–51,990)
Diameter of Crankpin, 1st Undersize 2.0263–2.0074 (50,971–50–990)
Diameter of Crankpin, 2nd Undersize 2.006–2.0074 (50,971–50–990)
Diameter of Crankpin, 3rd Undersize 1.9868–1.9876 (50,471–50,490)
Width of Crankpin 1.338–1.3401 (34,000–34,039)
Diameter of Crankshaft Main Journals
Standard 2.5185–2.5193 (63,971–63,99)
Diameter of Crankshaft Main Journals
1st Undersize 2.4988–2.4996 (63,471–63,490)
Diameter of Crankshaft Main Journals,
2nd Undersize 2.4791–3.4799 (6 2,971–62,990)
Diameter of Crankshaft Main Journals,
3rd Undersize 2.4595–2.4602 (62,471–62,4900)
Crankshaft Center Journal, Standard 2.3611–2.3618 (59,971–59,990)
Crankshaft Center Journal, 1st Undersize 2.3414–2.3421 (59,471–59,490)
Crankshaft Center Journal, 2nd Undersize . . . 2.3217–2.3224 (58,971–58,990)
Crankshaft Center Journal, 3rd Undersize . . . 2.302–2.3028 (58–471–58,490)
Maximum Out–of–Round Tolerance of Journals 00275 (0,07)
End Play of Crankshaft 0.0078–0.0157 (0,2–0,4)
Hardness of Journals (Minimum) . . . . . .50 HRC
Hardness of Journals (Normal) . . . . . .55–61 HRC

8A–2.6 Lubrication System

Oil Pressure Minimum at Low Idle . . . . . 7.25 PSI (0,5 bar)
Oil Pressure Minimum at 2500 RPM . . . . . .60–75 PSI (4–5 bar)
End Clearance in Oil Pump Gear . . . . . 0.004 (0,1 mm)

Check level must be maintained between the *ADD* and *FULL* marks on the dipstick. Use a good quality detergent motor oil that meets the API service classification CC or CD.

Use oil of correct SAE viscosity for expected temperature conditions.

RECOMMENDED SAE VISCOSITY NUMBER (LUBRICATION OILS FOR ENGINE CRANKCASE)

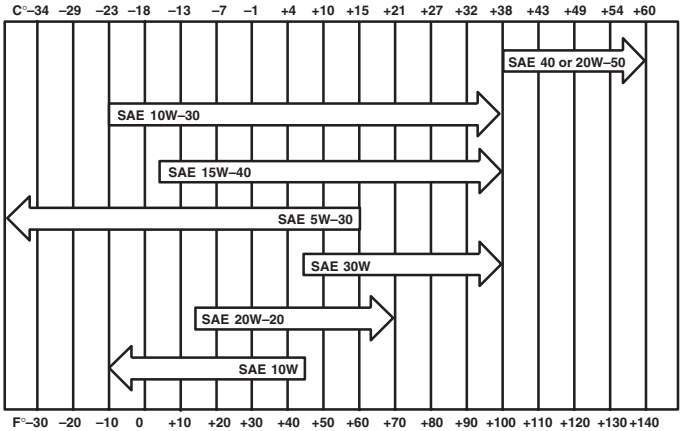

TEMPERATURE RANGE ANTICIPATED BEFORE NEXT OIL CHANGE

8A–2.7 Torque Specifications (Deutz Engine)

ITEM	PRELOADING	TIGHTENING	TOTAL
Cylinder Head Bolts	22 ft–lbs (30 Nm)	45°45°45°30°	165°
Cylinder Head Brass Plug	59 ft–lbs (80 Nm)	– – –	–
Injector Hold–Down	18–22 ft–lbs (25–30 Nm)	– – –	–
Connecting Rod	22 ft–lbs (30 Nm)	30°30°30°	90°
Main Bearing Support Bracket Bolt (1 Only)	22 ft–lbs (30 Nm)	60° – –	60°
Main Bearing Bolts	22 ft–lbs (30 Nm)	30°30° –	60°
Blower Mounting Bolts	22 ft–lbs (30 Nm)	60° – –	60°
V–Belt Pulley	22 ft–lbs (30 Nm)	90° – –	90°
Intake Manifold	11 ft–lbs (15 Nm)	– – –	11 ft–lbs (15 Nm)
Crankshaft Gear	22 ft–lbs (30 Nm)	30°30° –	60°
Oil Suction Pipe	–	37 ft–lbs (50 Nm)	37 ft–lbs (50 Nm)
Flywheel	22 ft–lbs (30 Nm)	30°60° –	90°
Rocker Arm Nuts	–	– – –	20 ft–lbs (28 Nm)
Counter Balance Weights	22 ft–lbs (30 Nm)	30°30° –	60°
Anti–Fatigue Bolt For Cooling Blower	26 ft–lbs (35 Nm)	– – –	–

TECHNICAL DATA (642 FORD)

WARNING

Instructions are necessary before operating or servicing machine. Read Operation & Maintenance Manual, and signs (decals) on machine. Follow warnings and instructions in the manuals when making repairs, adjustments or servicing. Check for correct function after adjustments. repairs or service. Failure to follow instructions can cause injury or death.

W–2144–0189

bobcat®

8B–1 (642 LOADER SPECIFICATIONS)

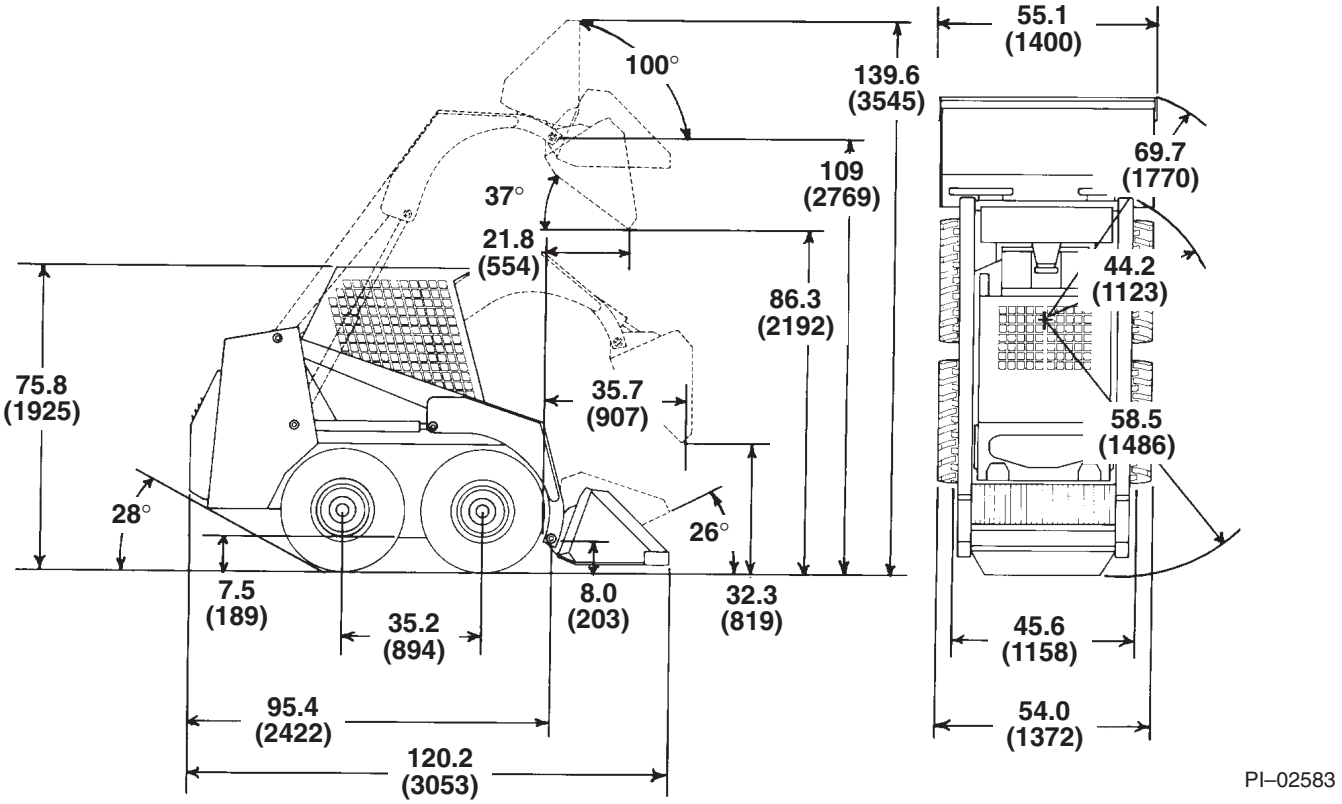

Dimensions are given for loader equipped with standard tires and dirt bucket and may vary with other bucket types. All dimensions are shown in inches. Respective metric dimensions are given in millimeters enclosed by parentheses.

Where applicable specifications conform to SAE standard and are subject to change without notice.

8B–1.1 OPERATION & PERFORMANCE

Operating Weight . . . . . 4000 lbs. (1860 kg)
Bucket Capacity (SAE) (54” Dirt) . . . . . 9,84 cu. ft. (2,7 m^3)
Rated Operating Capacity . . . . . 1000 lbs. (454 kg)
Travel Speed . . . . . 6.6 MPH (10,6 Km/hr.)

8B–1.2 ENGINE SPECIFICATIONS

Cylinders 4
Cooling Medium . . . . . Liquid
Displacement . . . . . 98 cu. in. (1606)
Horsepower . . . . . 32 HP (23,9 Kw)
Torque . . . . . 72.8 ft.–lbs. (99 Nm) @ 1800 RPM
Fuel Type . . . . . Gas
Engine Lubrication . . . . . Full Pressure with Full Flow Filter
Crankcase Ventilation . . . . . Open Breathing
Air Cleaner . . . . . Replaceable dry cartridge
Maximum Governed RPM (Full Load) . . . . . 2500 RPM

8B–1.3 HYDRAULIC SYSTEM

Pump Type . . . . . Vane
Pump Capacity . . . . . 9,5 gal./min. (36L/min.) @ 2500 RPM
Control Valve . . . . . Open center with lift, tilt & auxiliary sections
System Relief Pressure . . . . . 1900 PSI (13100 kPa)
Filtration . . . . . 10 Micron, replaceable cartridge and 40 Micron sintered filter
Hydraulic Fluid Type . . . . Clark Bobcat Fluid (6563328) or 10w–30 or 10W–40
. . . . . Class SE or SF motor oil (5W–30 at Temp. below 10°F. [23°C])

8B–1.4 HYDRAULIC CYLINDERS . . . . . Doubleacting

Function	Lift (2)	Tilt (1)
Bore	2.0 in. (50,80 mm)	3.25 in. (82,55 mm)
Rod	1.25 in. (31,75 mm)	1.50 in. (38,10 mm)
Stroke	25 in. (635 mm)	12.30 in. (312,42 mm)

8B–1.5 HYDROSTATIC TRANSMISSION & FINAL DRIVE

Pump Type . . . . . Inline, axial piston
Pump Displacement . . . . . 2.5 cu. in. (40,96 cm^3)
Motor Type . . . . . Gerotor
Motor Displacement . . . . . 1.9 cu. in. (239,5 cm^3)
Final Drive . . . . . Oil Bath Gear Reduction and Roller Chain to Each Axle

8B–1.6 ELECTRICAL

Alternator . . . . . 37 amp. ventilated
Battery . . . . . 12 volt, 435 cold cranking amps.
Starter . . . . . 12 volt, gear drive 1.5 HP (1,1 Kw)

8B–1.7 TIRES

Flotation . . . . . 10 x 16.5, 4 ply rating, 35 PSI (240 kPa)
Standard . . . . . 7.00 x 15, 6 ply rating, 55 PSI (379 kPa)

8B–1.8 FLUID CAPACITIES

Fuel Tank . . . . . 13 gal. (49 L)
Engine Lube Oil (W/Filter) . . . . . 4 qts. (3,8 L)
Transmission (Chaincase) . . . . . 20 qt. (19 L)
Hydraulic/Hydrostatic Reservoir . . . . . 3.5 gal. (12,30 L)
Engine Cooling system (w/Overflow Reservoir) . . . . . 13 qts. (12 L)

8B–2 ENGINE SPECIFICATIONS, 642 (Ford)

All specifications are given in inches with metric in parenthesis.

Displacement . . . . . 98 CID (1600 cc)
Bore 3.188 (80,98)
Stroke 3.056 (77,62)
Firing Order 2–1–4–3
Oil Capacity W/Filter (Approx.) . . . . . 3.5 Qt. (3,311 liters)

8B–2.1 Fuel Specifications

Always use clean fuel. Do not let the tank become empty.
Type of Fuel . . . . . Regular gasoline, 85–90 octane

Fuel System

Float Level . . . . . 1.15625 inch (29,4 mm)
Pump Pressure . . . . . 3.5 – 5.0 PSI (4,75 – 6,78 kPa)

8B–2.2 Engine Oil

Specifications

Check oil level after every 8 hours of operation. (Check oil every 4 hours on new engine during the first 50 hours of operation.)

Oil level must be between the *ADD* and *FULL* mark on the dipstick. Use a good quality detergent motor oil that meets the correct API service classification SC or SE.

Use oil of correct SAE viscosity for expected temperature conditions.

RECOMMENDED SAE VISCOSITY NUMBER (LUBRICATION OILS FOR ENGINE CRANKCASE)

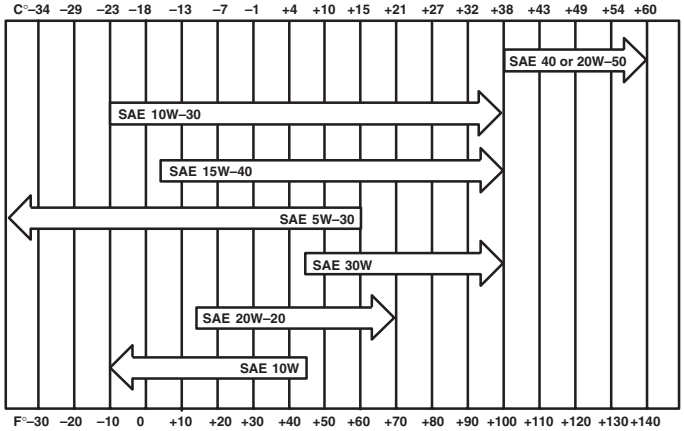

TEMPERATURE RANGE ANTICIPATED BEFORE NEXT OIL CHANGE

IMPORTANT

Never overfill the engine crankcase with oil.

I–2125–0597

8B–2.3 Lubrication System

Oil Pressure–Hot @ 2000 RPM	35–40 PSI (47,5–54,2 kPa)
Oil Pump–Rotor Assembly	
Eng. Clearance	0.001–0.004 (0,025–0,102)
Outer Race to Housing Clearance	0.005–0.0075 (0,13–0,195)
Clearance Between Inner & Outer Rotors	0.006 (0,160)

8B–2.4 Cylinder Heads

Gasket Surface Flatness per 12 inches (304,8)	0.0015 (0,0375)
Valve Guide Bore Diameter	0.3113–0.3125 (7,907–7,938)
Valve Guide Replacement Bushing Bore Diameter	0.4383–0.4391 (11,113–11,153)
Valve Seat Width – Intake	0.0625 (1,59)
Exhaust	0.0781 (1,98)
Valve Seat Angle	45°

8B–2.5 Valve Mechanism

Lash Intake – (Cold)	0.008–0.010 (0,20–0,25)
Exhaust – (Cold)	0.018–0.020 (0,45–0,51)
Stem Diameter – Intake	0.3098–0.3105 (7,868–7,886)
Exhaust	0.3098–0.3096 (7,846–7,863)
Oversize 0.003 (0,076) Intake	0.3128–0.3135 (7,944–7,962)
Exhaust	0.3110–0.3126 (7,922–7,939)
Oversize 0.015 (0,38) Intake	0.3248–0.3255 (8,248–8,266)
Exhaust	0.3239–0.3246 (8,226–8,243)
Stem to Guide Clearance Intake	0.0008–0.0027 (0,020–0,068)
Exhaust	0.0017–0.0036 (0,043–0,091)
Length – All	4.345–4.365 (110,4–110,9)
Head Diameter	
Intake	1.559–1.550 (39,60–39,40)
Exhaust	1.340–1.330 (34,00–33,80)
Seat Angle	44–1/2°–45°
Face Runout–Wear Limit	0.002 (0,05)
Spring Free Length	1.48 (37,6)
Spring Assembled Height Pad to Retainer	1.263 (32,8)
Spring Load at Assembled Height	44–49 lbs. (19,96–22,23 kg)
Push Rod Diameter	0.250–0.254 (6,35–6,45)
Length	7.59–7.62 (192,79 – 193,55)
Max Runout	0.012 (0,300)
Tappet–Length	1.85 (47,0)
Stem Diameter	0.5120–0.5122 (13,004–13,009)
Block Bore	0.516–0.517 (13,106–13,107)
Clearance to Block	0.0005–0.002 (0,013–0,05)
Rocker Shaft–Diameter	0.623–0.624 (15,83–15,85)
Rocker Bore	0.625–0.6365 (15,88–15, 913)
Shaft Clearance in Rocker	0.001–0.0035 (0,03–0,089)
Rocker Arm Ratio	1.54:1

8B–2.6 Camshaft

Journal Diameter 1.5597–1.5605 (39,617–39,637)
Bearing I.D. 1.5615–1.5620 (39,662–39,675)
Length Front & Rear 2.26 (57,4)
Center 2.26 (57,4)
Clearance 0.001–0.0023 (0,025–0,058)
wear limit .003 (0,076)
Bore for Bearing 1.6885–1.6895 (42,888–42,913)
Oversize Bearing
O/S on OD Standard ID 0.020 (0,513)
End Play 0.0024–0.075 (0,061–0,192)
Thrust Plate Thickness 1755–.1775 (4,458–4,509)
Valve Timing –
Inlet Opens – °BTDC 17–21
Inlet Closes – °ABDC 51–55
Exhaust Opens – °BBDC 51–70
Exhaust Closes – °ATDC 17–22
Inlet Cam Lift . . . . . 0.2108 (5,3548) – 0.2356 (5,9851)
Exhaust Cam Lift . . . . . 0.2176 (5,5276) – 0.2321 (5,8943)

8B–2.7 Crankshaft

Main Bearing Journal Diameter 2.1253–2.1261 (53,983–54,003)
Main Bearing Clearance 0.0005–0.002 (0,013–0,051)
Rod Bearing Journal Diameter 1.9368–1.9376 (49,194–49,215)
Rod Bearing Clearance 0.0005–0.002 (0,013–0,051)
Main & Rod Bearing Journal –
Max. Taper 0.0003 (0,008)
Max. Out–of–Round 0.0004 (0,010)
Crankshaft End Play 0.003–0.011 (0,08–0,28)
Bearing Wall Thickness – Standard 0.0719–0.0722 (1,788–1,796)
For every 0.002 (0,051) undersized thickness add 0.001 (0,026) to standard thickness
Thrust Washers . . . . . 0.091–0.093 (Std), 0.002, 0.005, 0.007 and 0.010

The crankshaft and cylinder block are color–coded for installation of the correct bearings AT THE FACTORY.

Use a micrometer to measure the inside diameter and the outside diameter of the bearing surfaces so that correct replacement bearings can be ordered.

8B–2.8 Connecting Rod

Piston Pin Bushing I.D. 0.8121–0.8125 (20,627–20,638)
Connecting Rod Bearing Bore 2.0825–2.0830 (52,90–52,91)
Connecting Rod Length Center to Center . . 4.9265–4.9295 (124,133–125,209)
Side Clearance 0.004–0.010 (0,10–0,25)
Max. Twist or Bend 0.004 (0,10)

Pin bushing and crankshaft bearing bore must be parallel and in the same vertical plate within the specified total difference at ends of 8–inch long bar measure 4.0 inches on each side of rod.

8B–2.9 Piston

Diameter 3.1853–3.1877 (80,907–80,967)
Piston to Bore Clearance 0.0016–0.0025 (0,04064–0,06350)
(Measure 90° to pin centerline and at bottom of pin)
(Clearance 90° to pin centerline and at bottom of pin)
Clearance between Deck and Piston crown at TDC . 0.025–0.043 (0,63–1,09)

8B–2.10 Piston Pin

Diameter 0.8119–0.8123 (20,622–20,632)
Interference Fit in Piston 0.0001–0.0003 (0,003–0,008)
Clearance in Rod Bushing 0.0001–0.0003 (0,003–0,008)

8B–2.11 Piston Rings

Top Compression Ring Width 0.6115–0.0625 (1,56–1,59)
Bottom Compression Ring Width 0.077–0.078 (0,003–0,008)
Top Clearance Ring Side Clearance 0.0016–0.0036 (0,041–0,091)
Bottom Compression Ring Side Clearance 0.0016–0.0036 (0,041–0,091)
Compression Ring Side Clearance–Wear Limit 0.006 (0,152)
Oil Ring Width 0.155–0.156 (3,94–3,96)
Oil Ring Side Clearance 0.0018–0.0038 (0,046–0,097)
Oil Ring Side Clearance–Wear Limit 0.007 (0,178)
Top Compression Ring–Std. Bore –
Ring Gap 0.009–0.014 (0,23–0,36)
Bottom Compression Ring –
Std. Bore–Ring Gap 0.009–0.014 (0,23–0,36)
Oil Ring–Std. Bore–Ring Gap Width 0.009–0.014 (0,23–0,36)

8B–2.12 Cylinder Block

Cylinder Bore Diameter 3.1869–3.1893 (80,948–81,008)
Cylinder Bore Out–of–Round – Max. 0.0015 (0,013)
Taper – Max. 0.001 (0,025)
Tappet Bore Diameter 0.516–0.517 (13,11–13,13)
Main Bearing Bore Diameter 2.2710–2.2715 (57,683–15,696)
Height, Pan Surface to Deck 8.326–8.331 (211,48–211,61)
Gasket Surface Flatness . . . . . 0.003–(0,076)
in any 6.0 inches . . . . . 0.006 (0,152) Max. overall
Cylinder Liner (Standard) . . . . . O.D. 3.316 (84,23 mm) I.D. 3.147 (80 mm)
Cylinder Liner –
(Oversize Block Bore) . . . . . O.D. 3.336 (84,73 mm) I.D. 3.157 (80,19 mm)

8B–2.13 Ignition system

Distributor Point Gap 0.025 (0,64)
Dwell Angle (Under 700 RPM W/Vacuum Line Removed) . . . . . 48°–52°
Firing Order 1–2–4–3
Rotation . . . . . Counterclockwise
Initial timing – BTC . . . . . 12°.
End Play . . . . . Preload
Spark Plug AGR–22
Plug Gap 0.026–0.028 (0,66–0,71)
Coil–Primary Resistance (Ohms) . . . . . 1.40–1.54 (75°F)
Secondary Resistance (Ohms) . . . . . 7600–8800 (75°F)
Primary External Resistor (Ohms) . . . . . 1.30–1.40 (75°F)
Condenser–(Micro Farads) 0.21–0.25

DISTRIBUTOR ADVANCE CHARACTERISTICS

ENGINE RPM	CENTRIFUGAL PLUS INITIAL ADVANCE	CENTRIFUGAL PLUS VACUUM PLUS INITIAL ADVANCE
500	10–12°	28–36°
1000	10–12°	28–36°
1200	10–12°	28–39°
1400	11–17°	29–41°
1600	13–19°	31–43°
2000	18–24°	36–48°
2600	22–28°	40–52°

*All above values are readings as seen at crankshaft timing marks.

8B–2.14 Starter

Solenoid Actuated Starter Motor			Starter Brushes		
Dia. In Inches (Metric)	Current Draw Under Normal Load (Amps.)	Normal Engine Cranking Speed (RPM) @ 79°F	No. Load (Amps.)	Wear Limit In Inches (Metric)	Spring Tension (Ounces Force)
3–1/2 (88,9)	135–250	140–180	65	5/16 (.8)	28

8B–2.15 Torque Specifications For Engine

Item	Ft.–Lbs.	Nm
Camshaft Sprocket to Camshaft Bolt	12 – 15	16 – 20
Camshaft Thrust Plate Bolt	2.5 – 3.5	3,4 – 4,7
Connecting Rod Bolts	30 – 35	41 – 47
Cylinder Head Bolts	Step 1–20–30 Step 2–50–55 Step 3–65–70	27 – 41 68 – 75 88 – 95
Crankshaft Pulley Bolt	24 – 28	33 – 38
Cylinder Front Cover Bolts	5 – 7	7– 9,5
Carburetor Attaching Nuts	12 – 15	16 – 20
Chain Tension Support to Cylinder Block	5 – 7	7 – 9,5
Distributor to Cylinder Block	5 – 7	7 – 9,5
Distributor Clamp	2 – 3	2,7 – 4,1
Exhaust Manifold to Cylinder Head Nuts	15 – 18	20 – 24
Separator Clamping Bolt	6 – 9	8 – 12
Flywheel to Crankshaft Bolts	45 – 50	61 – 68
Fuel Pump to Cylinder Block	12 – 15	16 – 20
Alternator Mounting to Cylinder Block Bolts	20 – 25	27 – 34
Intake Manifold to Cylinder Head Bolts	15 – 18	20 – 24
Main Bearing Cap Bolts	65 – 70	88 – 95
Oil Pump to Cylinder Block	12 – 15	16 – 20
Oil Drain Plug	20 – 25	27 – 34
Oil Pan to Cylinder Block Bolts	6 – 8	8 – 11
Oil Pump Cover to Oil Pump Bolts	5 – 7	7 – 9,5
Rear Oil Seal Retainer to Cylinder Block	12 – 15	16 – 20
Rocker Cover to Cylinder Head Screws	2.5 – 3.5	3,4 – 4,7
Rocker Shaft Support Bolt	25 – 30	34 – 41
Spark Plug to Cylinder Head	22 – 28	30 – 38
Water Outlet Connection to Cylinder Head	12 – 15	16 – 20
Water Pump to Cylinder Block	5 – 7	7 – 9,5
Water Pump to Cylinder Block	12 – 15	16 – 20
Oil Filter	1/2 turn after gasket contacts surface	

bobcat®

TECHNICAL DATA (643 KUBOTA)

WARNING

Instructions are necessary before operating or servicing machine. Read Operation & Maintenance Manual, and signs (decals) on machine. Follow warnings and instructions in the manuals when making repairs, adjustments or servicing. Check for correct function after adjustments. repairs or service. Failure to follow instructions can cause injury or death.

W–2144–0189

8C–1 (643 LOADER SPECIFICATIONS)

Where applicable, specifications conform to SAE standards. Specifications are subject to change without notice.

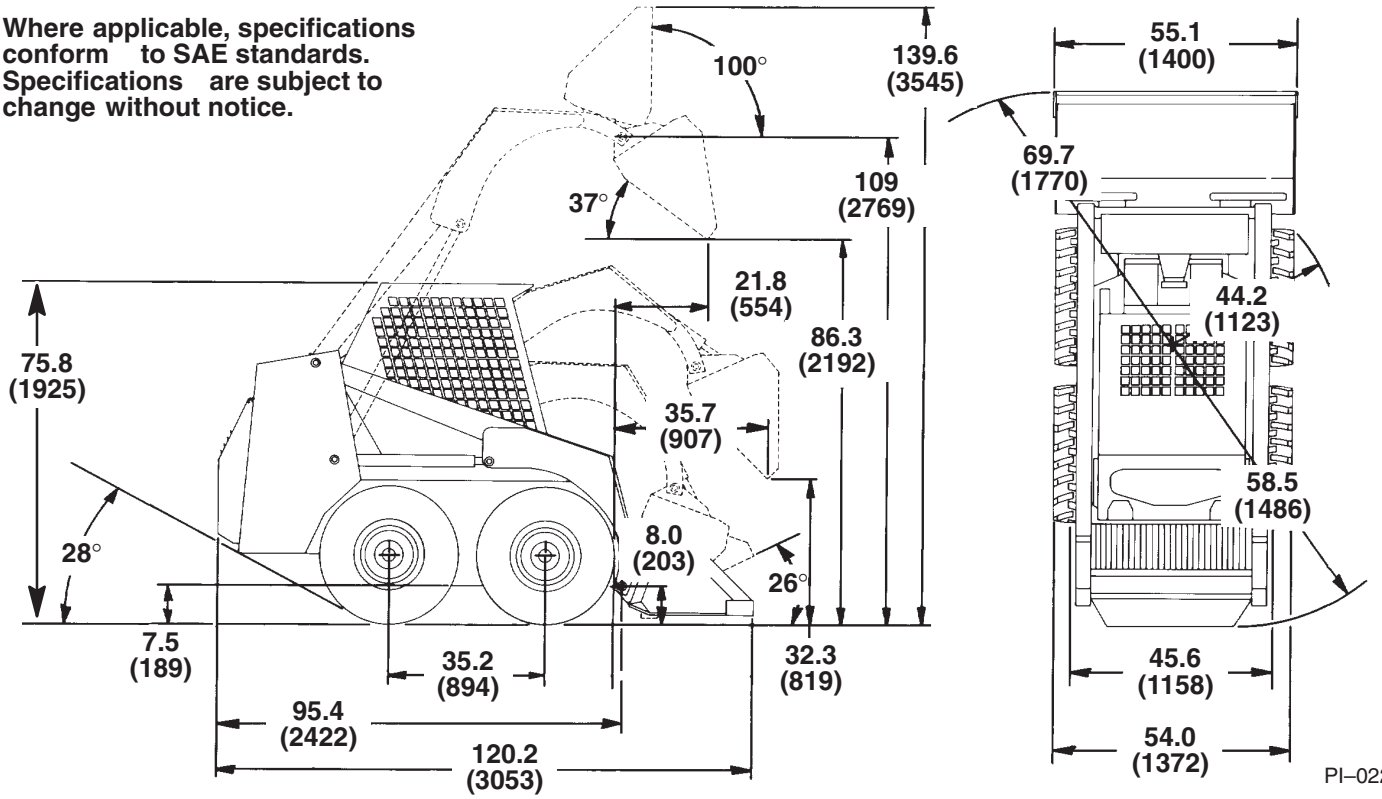

Dimensions are given for a loader equipped with standard tires and dirt bucket. Dimensions may vary with other bucket types. All dimensions are shown in inches. Respective metric dimensions are given in millimeters enclosed by parentheses.

8C–1.1 OPERATION & PERFORMANCE

Operating Weight . . . . . 4200 lbs. (1907 kg)
Bucket Capacity (SAE) (54" Dirt) . . . . . 9,84 cu. ft. (2,8 m^3)
Rated Operating Capacity . . . . . 1000 lbs. (454 kg)
Travel Speed . . . . . 6.6 MPH (10,6 Km/hr.)

8C–1.2 ENGINE SPECIFICATIONS

Cylinders 3
Cooling System . . . . . Liquid
Displacement . . . . . 85.13 cu. in. (1395)
Horsepower . . . . . 28.5 HP (21,26 Kw)
Torque . . . . . 63.3 ft.–lbs. (86 Nm)
Fuel Type . . . . . Diesel
Engine Lubrication . . . . . Gear Pump Pressure
Crankcase Ventilation . . . . . Open Breathing
Air Cleaner . . . . . Replaceable Dry Cartridge with Safety Element
Maximum Governed RPM (Full Load) . . . . . 2500 RPM
Low Idle . . . . . 900–1000 RPM
High Idle . . . . . 2580–2700 RPM

8C–1.3 HYDRAULIC SYSTEM

Pump Type . . . . . Vane
Pump Capacity . . . . . 9.5 gal./min. (36L/min.) @ 2500 RPM
Control Valve . . . . . Open center with lift, tilt & auxiliary sections
System Relief Pressure . . . . . 1900 PSI (13100 kPa)
Filtration . . . . . 10 Micron, replaceable cartridge and 40 Micron sintered filter
Hydraulic Fluid Type . . . . Clark Bobcat Fluid (6563328) or 10w–30 or 10W–40
Class SE or SF motor oil (5W–30 at Temp. below 10°F. [23°C])

Cylinders . . . . . Doubleacting

Function	Lift (2)	Tilt (1)
Bore	2.0 in. (50,80 mm)	3.25 in. (82,55 mm)
Rod	1.25 in. (31,75 mm)	1.50 in. (38,1 mm)
Stroke	25.00 in. (635 mm)	14.30 in. (363,22 mm)

8C–1.4 HYDROSTATIC TRANSMISSION & FINAL DRIVE

Pump Type . . . . . Inline, axial piston
Pump Displacement . . . . . 2.5 cu. in. (40,96 cm^3)
Motor Type . . . . . Geroler
Motor Displacement . . . . . 1.9 cu. in. (239,5 cm^3)
Final Drive . . . . . Oil Bath Gear Reduction and Roller Chain to Each Axle

8C–1.5 ELECTRICAL

Alternator . . . . . 55 amp. Ventilated
Battery . . . . . 12 volt, cold cranking 600 amps.
Starter . . . . . 12 volt, gear drive 4.15 HP (3,1 Kw)

8C–1.6 TIRES

Standard . . . . . 7.00 x 15, 6 ply rating, 55 PSI (379 kPa)
Flotation . . . . . 10 x 16.5, 6 ply rating, 35 PSI (240 kPa)

8C–1.7 FLUID CAPACITIES

Fuel Tank . . . . . 13 gal. (49 L)
Engine Lube Oil (W/Filter) . . . . . 7 qts. (6,622 L)
Transmission (Chaincase) . . . . . 20 qt. (19 L)
Hydraulic/Hydrostatic Reservoir . . . . . 3.5 gal. (12,3 L)
Engine Cooling system (w/Overflow Reservoir) . . . . . 11 qts. (10,4 L)

8C–2 ENGINE SPECIFICATIONS

8C–2.1 Fuel Injection Nozzles

Opening Pressure . . . . . 1990–2130 PSI (13721–14686)
Fuel Tightness Nozzle Seat . . . . . Dry Nozzle at 1848–1990 PSI (12742–13721 kPa)

8C–2.2 Fuel Injection Pump

Fuel Tightness of Plunger . . . . . 8 sec: initial pressure from 8532–7110 PSI (58828–49023 kPa)
Limit Permitted . . . . . 5 seconds or less
Injection Timing . . . . . 25–26 degrees before TDC

8C–2.3 Cylinder Head

Cylinder Head Surface
Not Straight . . . . . 0.0012 in. (0,03 mm)
Thickness of Gasket . . . . . 0.0512–0.0630 in. (1,300–1,600 mm)
Thickness of Gasket Shims . . . . . 0.0079 in. (0,20 mm)
Top Clearance (Piston to Head) . . . . . 0.0276–0.0454 in. (0,7–11,5 mm)
Head Bolt Torque
Flange Head Bolt . . . . . 65–68 ft.–lbs. (88–92 Nm)
Bolt W/Washer . . . . . 58–61 ft.–lbs. (79–83 Nm)
Maximum Milling Allowed . . . . . 0.004 in. (0,1 mm)

8C–2.4 Valves

Valve Seat Width . . . . . 0.0827 in. (2,1 mm)
Valve Seat Angle . . . . . 45 degrees
O.D. of Valve Stems
(Intake and Exhaust) . . . . . 0.3134–0.3140 in. (7,960–7,975 mm)
I.D. of Valve Guides
(Intake and Exhaust) . . . . . 0.3156–0.3161 in. (8,015–8,030 mm)
Clearance Between Valve Stem
And Guide . . . . . 0.0016–0.0028 in. (0,04–0,07 mm)
Limited Permitted . . . . . 0.0039 in. (0,1 mm)
Depth of Valve . . . . . 0.0433–0.0512 in. (1,1–1,3 mm)
Valve Clearance (Old)
(Intake and Exhaust) . . . . . 0.0071–0.0087 (0,18–0,22 mm)

8C–2.5 Valve Springs

Free Length . . . . . 1.6417–1.6614 in. (41,7–42.2 mm)
Fitted Length . . . . . 1.3839 in. (35,15 mm)
Load to Compressed to Fitted Length . . . . . 26.5 lbs. (12,03 kg)
Limit Permitted . . . . . 22.5 lbs. (10,22 kg)

8C–2.6 Rocker Arms

O.D. of Rocker Arm Shaft . . . . . 0.5501–0.5506 in. (13,973–13,984 mm)
I.D. of Rocker Arm Bushings . . . . . 0.5513–0.5529 in. (14,002–14,043 mm)
Clearance Between Rocker Arm
and Bushings . . . . . 0.0004–0.0028 in. (0,01–0,07 mm)
Limit Permitted . . . . . 0.0059 in. (0,15 mm)

8C–2.7 Camshaft

O.D. of Camshaft Bearing Journal . . . 1.5722–1.5728 in. (39,934–39,950 mm)
I.D. of Camshaft Bearing . . . . . 1.5748–1.5758 in. (40–40,025 mm)
Clearance Between Camshaft
Journal and Bearing . . . . . 0.002–0.0036 in. (0,50–0,091 mm)
Limit Permitted . . . . . 0.0059 in. (0,15 mm)
Alignment of Camshaft . . . . . 0.0008 in. (0,02 mm)
Cam Lobe Height (Intake and Exhaust) . . . . . 1.3134 in. (33,36 mm)
Limit Permitted . . . . . 1.3114 in. (33,31 mm)
Gear Clearance (Backlash) . . . . . 0.0016–0.0045 in. (0,04150–0,1154 mm)
Limited Permitted . . . . . 0.0118 in. (0,3 mm)

NOTES

8C–2.8 Cylinder

I.D. of Cylinder Liner	3.3465–3.3473 in. (85–85,022 mm
Limit Permitted	+0.0059 in. (+0,150 mm)
Oversize	3.366–3.3670 in. (85,5–85,5522 mm)

8C–2.9 Piston Rings

Ring Gap (Top and 2nd Ring)	0.0118–0.0177 in. (0,30–0,45 mm)
Limit Permitted	0.0492 in. (1,25 mm)
Ring Gap (Oil Ring)	0.0098–0.0157 in. (0,25–0,40 mm)
Limit Permitted	0.0491 in. (1,25 mm)
Side Clearance of Ring Groove	
Top Ring	0 Clearance
Second Ring	0.0037–0.0047 in. (0,093–0,120 mm)
Oil ring	0.0008–0.0020 in. (0,020–0,052 mm)

8C–2.10 Pistons

O.D. of Piston (Standard)	3.342 (84,88 mm)
O.D. of Piston (Oversize)	3.362 (85,39 mm)
I.D. of Piston Bosses	0.9055–0.9060 in. (23–23,013 mm)
Limit Permitted	0.9076 in. (23,053 mm)
O.D. of Piston Pin	0.9056–0.9059 in. (23,002–23,011 mm)
I.D. of Connect Rod Bushing	
(Small End, Fitted)	0.9065–0.9071 in. (23,025–23,030 mm)
Clearance Between Piston Pin	
And Bushing (New)	0.0006–0.0015 in. (0,015–0,04 mm)
(Service Parts)	0.0006/0.0026 in. (0,015/0,07 mm)
Limit Permitted	0.0059 in. (0,15 mm)
Connecting Rod Alignment	0.0008 in. (0,02 mm)
Limit Permitted	0.002 in. (0,05 mm)

8C–2.11 Crankshaft

I.D. of Crankshaft Main Bearing	
(No. 1)	2.0465–2.0488 in. (51,98–52,039 mm)
I.D. of Crankshaft Main Bearing	2.0465–2.0482 in. (51,98–52,025 mm)
Clearance Between Crankshaft	
And Journal and Bearing	0.0016–0.0046 in. (0,04–0,118 mm)
Limit Permitted	0.0079 in. (0,2 mm)
O.D. of Connecting Rod JOurnals	1.7307–1.7313 in. (43,959–43,975 mm)
I.D. of Connecting Rod Bearings (Std.)	1.7327–1.7343 in. (44,010–44,052 mm)
I.D. of Connecting Rod (Undersizes)	1.7228–1.7234 (43,759–43,775 mm)
	1.7149–1.7156 (43.559–43,575 mm)
Clearance Between Connecting	
Rod Journal and Bearing	0.0014–0.0037 in. (0,035–0,093 mm)
Limit Permitted	0.0079 in. (0,2 mm)
End Play of Crankshaft	0.0059–0.0122 in. (0,15–0,21 mm)

8C–2.12 Oil Pump

Oil Pressure @ rated RPM	42–56 PSI (289,6–386,1 kPa)
Limit Permitted	36 PSI (248,2 kPa)
Rotor Lobe Clearance	0.0039–0.0063 in. (0,10–0,16 mm)
Limit Permitted	0.0079 in. (0,20 mm)
Clearance Between Outer Rotor	
And Pump Body	0.0043–0.0075 in. (0,11–0,19 mm)
Limit Permitted	0.0098 in. (0,25 mm)

8C–2.13 Engine Oil

Specifications

Check oil level every 8 hours of operation (Check oil every 4 hours on new engine during the first 50 hours of operation).

Oil level must be between the *ADD* and *FULL* marks on the dipstick. Use a good quality detergent motor oil that meets the correct API service classification (See Chart on Page 8C–5).

Use oil of the correct SAE viscosity for expected temperature conditions.

NOTES

RECOMMENDED SAE VISCOSITY NUMBER (LUBRICATION OILS FOR ENGINE CRANKCASE)

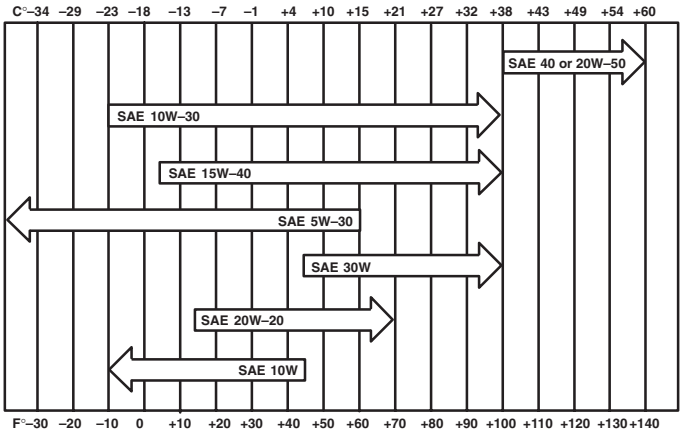

TEMPERATURE RANGE ANTICIPATED BEFORE NEXT OIL CHANGE

IMPORTANT

Never overfill the engine crankcase with oil.

I–2125–0597

NOTE: Special bolts are used where required. Please refer to assembly section for the correct torque of the special bolts.

8C–3 643 ENGINE BOLT TORQUES

Bolt material grades are shown by numbers punched on the bolt heads.

Before tightening, check the numbers shown below:

PUNCHED NUMBER	BOLT MATERIAL GRADE	
None	Standard Bolts	SS41, S20C
7	Special Bolts	S43C, 248C (Refined)
9	Special Bolts	SCM3, SCR3 (Refined)

BOLT TORQUES			
MATERIAL GRADE	STANDARD BOLT	SPECIAL BOLT	SPECIAL BOLT
NOMINAL DIAMETER	SS41, S20C	S43C, S48C (Refined)	SCR3, SCM3 (Refined)
M6	5.8 to 6.9 ft.–lbs. (7.8 to 9.3 Nm)	7.2 to 8.3 ft.–lbs. (9.8 to 11.3 Nm)	9.0 to 10.5 ft.–lbs. (12.3 to 14.2 Nm)
M8	13.0 to 15.2 ft.–lbs. (17.7 to 20.6 Nm)	17.4 to 20.3 ft.–lbs. (23.5 to 27.5 Nm)	21.7 to 25.3 ft.–lbs. (29.4 to 34.3 Nm)
M10	28.9 to 33.3 ft.–lbs. (39.2 to 45.1 Nm)	35.4 to 41.2 ft.–lbs. (48.0 to 11.3 Nm)	44.8 to 52.1 ft.–lbs. (60.8 to 70.6 Nm)
M12	46.3 to 53.5 ft.–lbs. (62.8 to 72.6 Nm)	57.1 to 66.5 ft.–lbs. (77.5 to 90.2 Nm)	75.9 to 86.8 ft.–lbs. (103.0 to 117.7 Nm)
M14	79.6 to 92.6 ft.–lbs. (107.9 to 125.5 Nm)	91.1 to 108.5 ft.–lbs. (123.6 to 147.1 Nm)	123.0 to 144.7 ft.–lbs. (166.7 to 196.1 Nm)
M16	123.0 to 141.0 ft.–lbs. (166.7 to 191.2 Nm)	144.7 to 166.4 ft.–lbs. (196.1 to 225.5 Nm)	191.7 to 224.2 ft.–lbs. (259.9 to 304.0 Nm)
M18	180.8 to 209.8 ft.–lbs. (245.2 to 284.4 Nm)	202.5 to 235.1 ft.–lbs. (274.6 to 318.7 Nm)	253.2 to 296.5 ft.–lbs. (343.2 to 402.0 Nm)
M20	245.9 to 289.3 ft.–lbs. (333.4 to 392.2 Nm)	271.2 to 318.2 ft.–lbs. (367.7 to 431.5 Nm)	361.6 to 419.5 ft.–lbs. (490.3 to 568.7 Nm)

TECHNICAL DATA

WARNING

Instructions are necessary before operating or servicing machine. Read Operation & Maintenance Manual, and signs (decals) on machine. Follow warnings and instructions in the manuals when making repairs, adjustments or servicing. Check for correct function after adjustments. repairs or service. Failure to follow instructions can cause injury or death.

W–2144–0189

8D–1 TORQUE SPECIFICATIONS

8D–1.1 Engine Group (641)

Ref.	Torque
1.	65–70 ft.–lbs. (88–95 Nm)
2.	25–28 ft.–lbs. (34–38 Nm)
3.	40–50 ft.–lbs. (54–68 Nm)
4.	125–140 ft.–lbs. (169–190 Nm)
5.*	90–100 ft.–lbs. (125–135 Nm)
6.	180–200 in.–lbs. (21–23 Nm)
7.*	270–300 in.–lbs. (31–34 Nm)
8.	30–35 in.–lbs. (3–4 Nm)
9.	190–240 in.–lbs. (21–27 Nm)

* Put LOCTITE on threads.

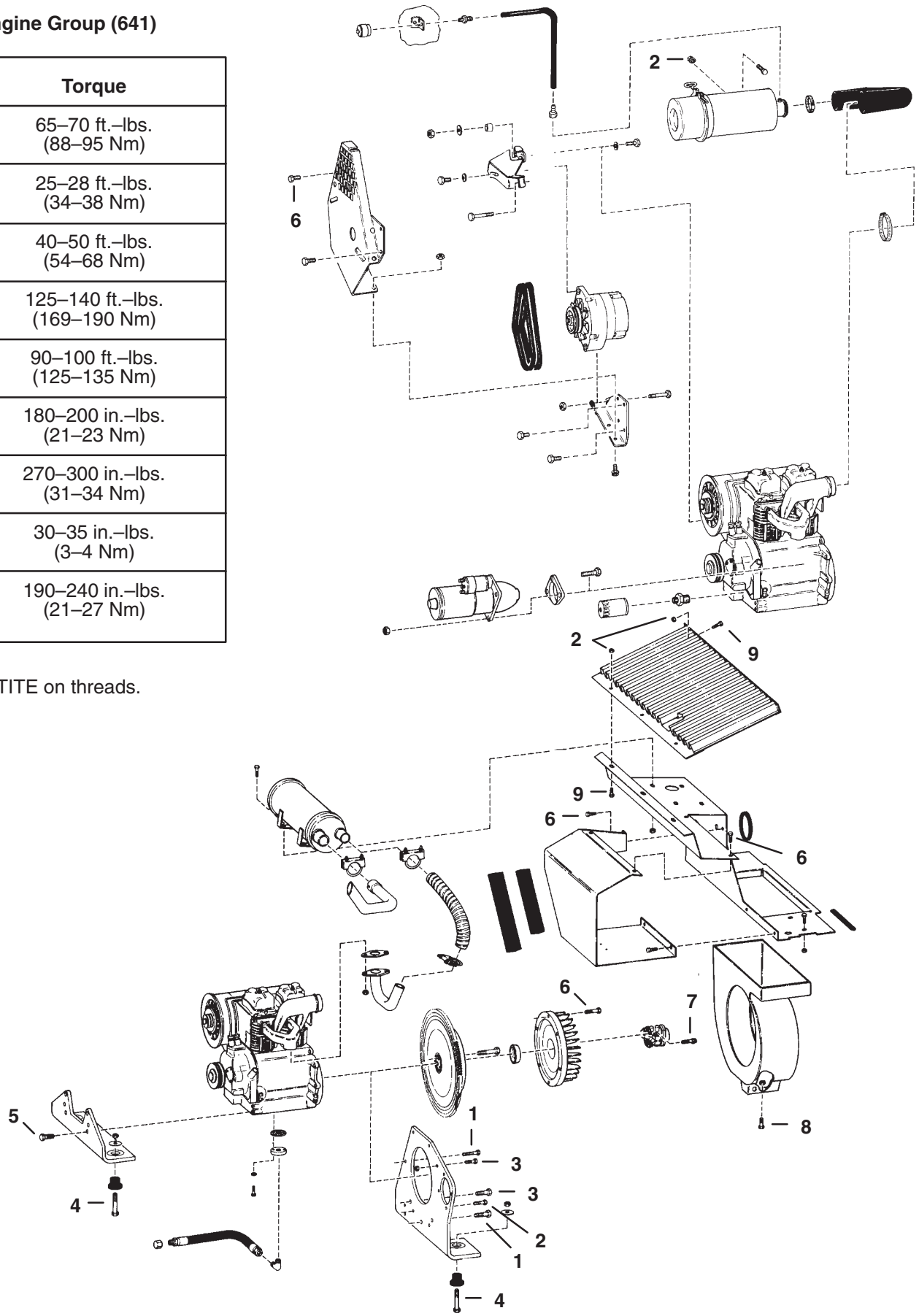

E–01345
D–01557

8D–1.2 Engine Group (642)

Ref.	Torque
1.	180–200 in.–lbs. (21–23 Nm)
2.	25–28 ft.–lbs. (34–38 Nm)
3.	65–70 ft.–lbs. (88–95 Nm)

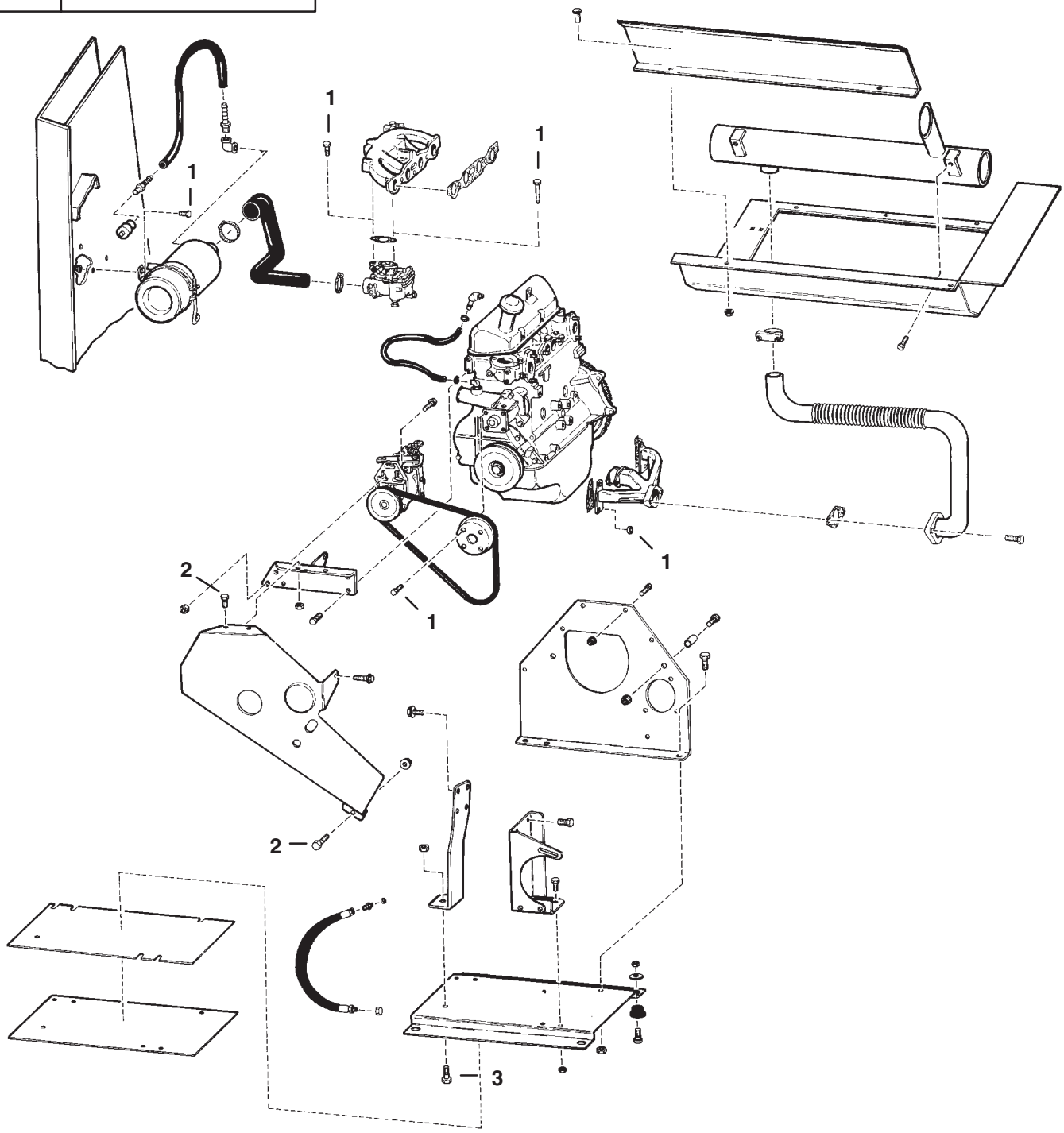

E–01346

8D–1.2 Engine Group (642) (Cont'd)

Ref.	Torque
1.	190–240 in.–lbs. (21–27 Nm)
2.	25–28 ft.–lbs. (34–38 Nm)
3.	180–200 ft.–lbs. (21–23 Nm)

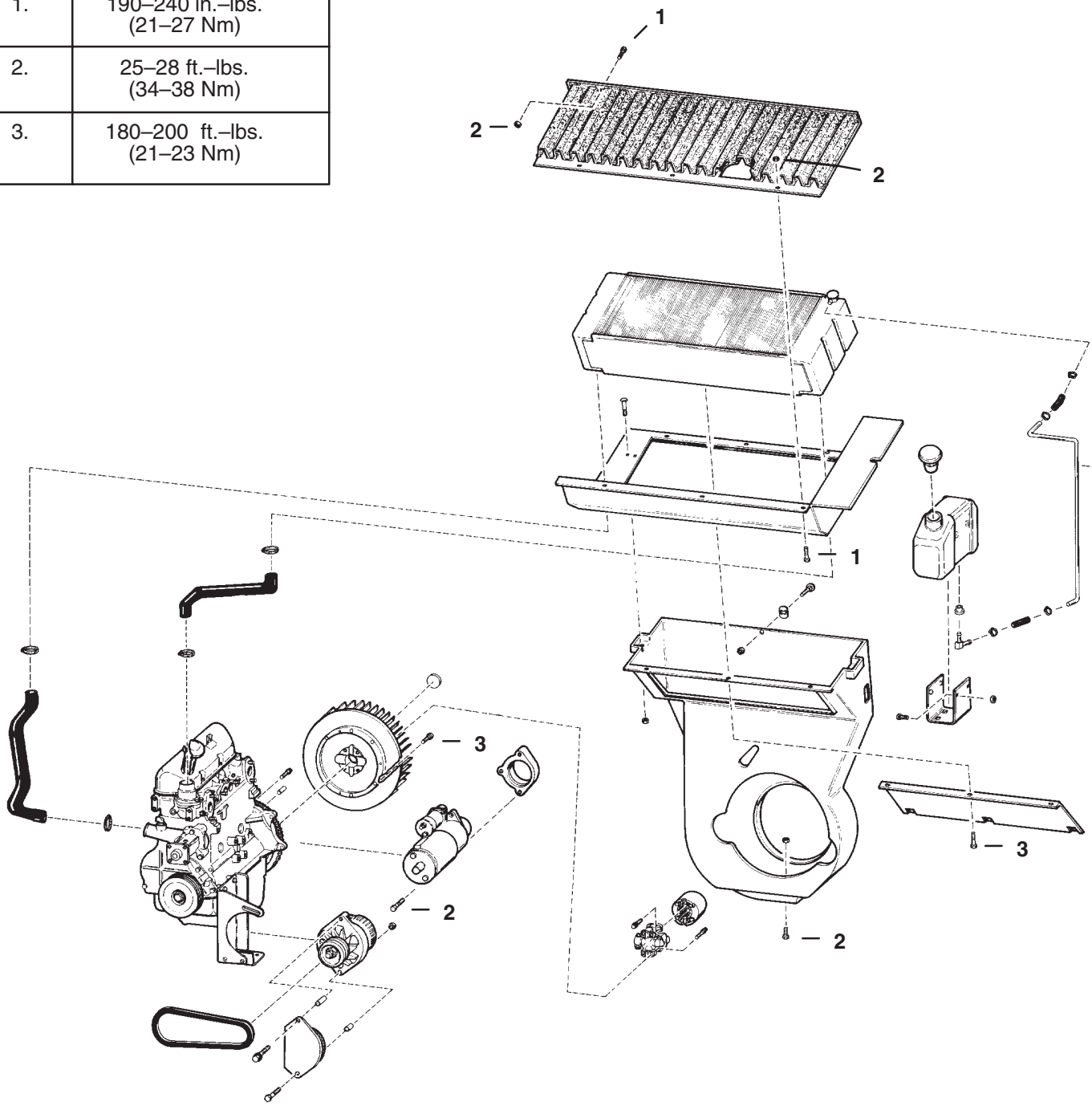

E–01347

8D–1.3 Engine Group (643)

Ref.	Torque
1.	180–200 in.–lbs. (21–23 Nm)
2.	65–70 ft.–lbs. (88–95 Nm)
3.	80–90 in.–lbs. (9–10 Nm)
4.	25–28 ft.–lbs. (34–38 Nm)

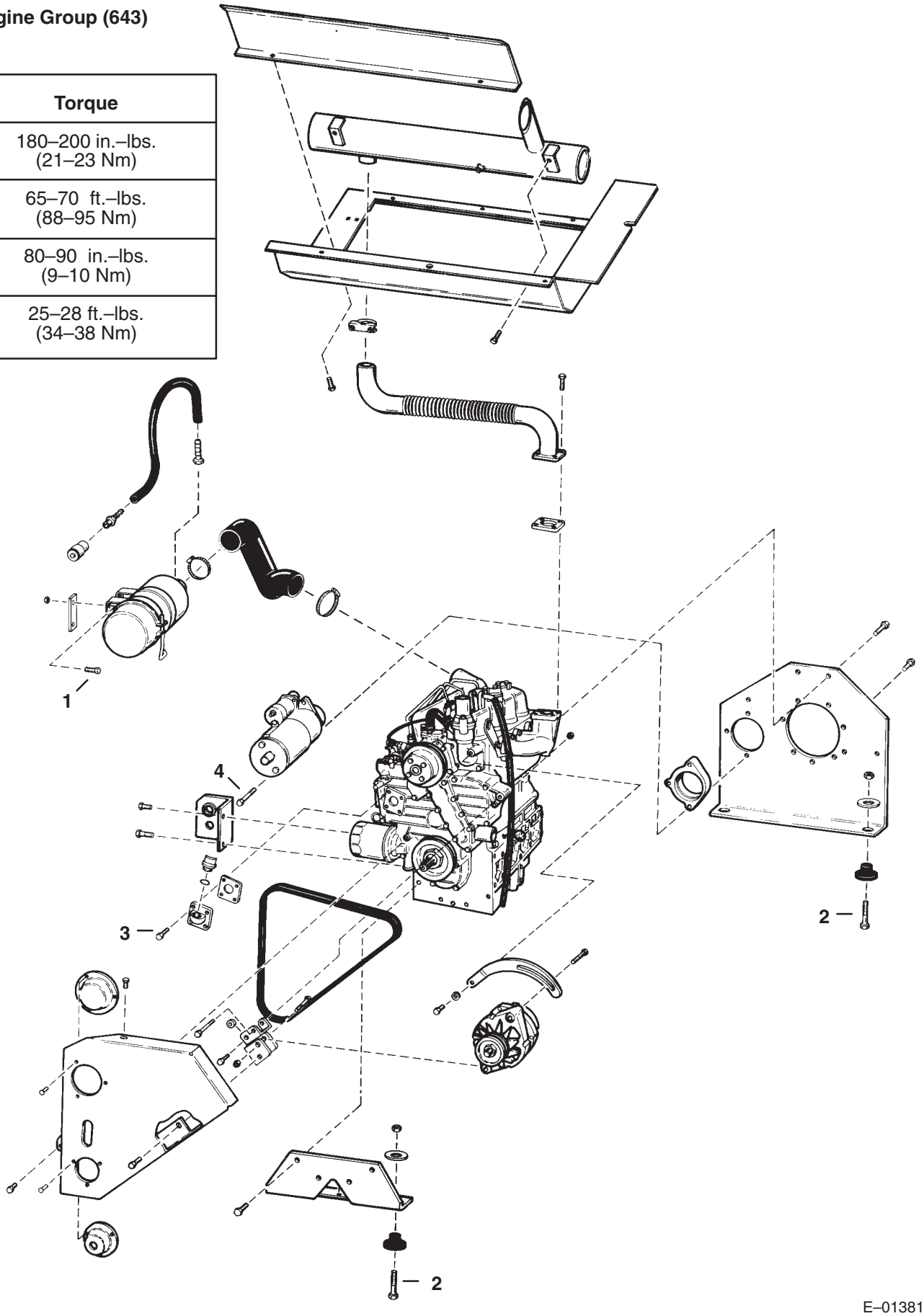

E–01381

8D–1.3 Engine Group (643) (Cont'd)

Ref.	Torque
1.*	25–28 ft.–lbs. (34–38 Nm)
2.*	270–300 in.–lbs. (31–34 Nm)
3.	65–70 ft.–lbs. (88–95 Nm)

* Apply LOCTITE to threads.

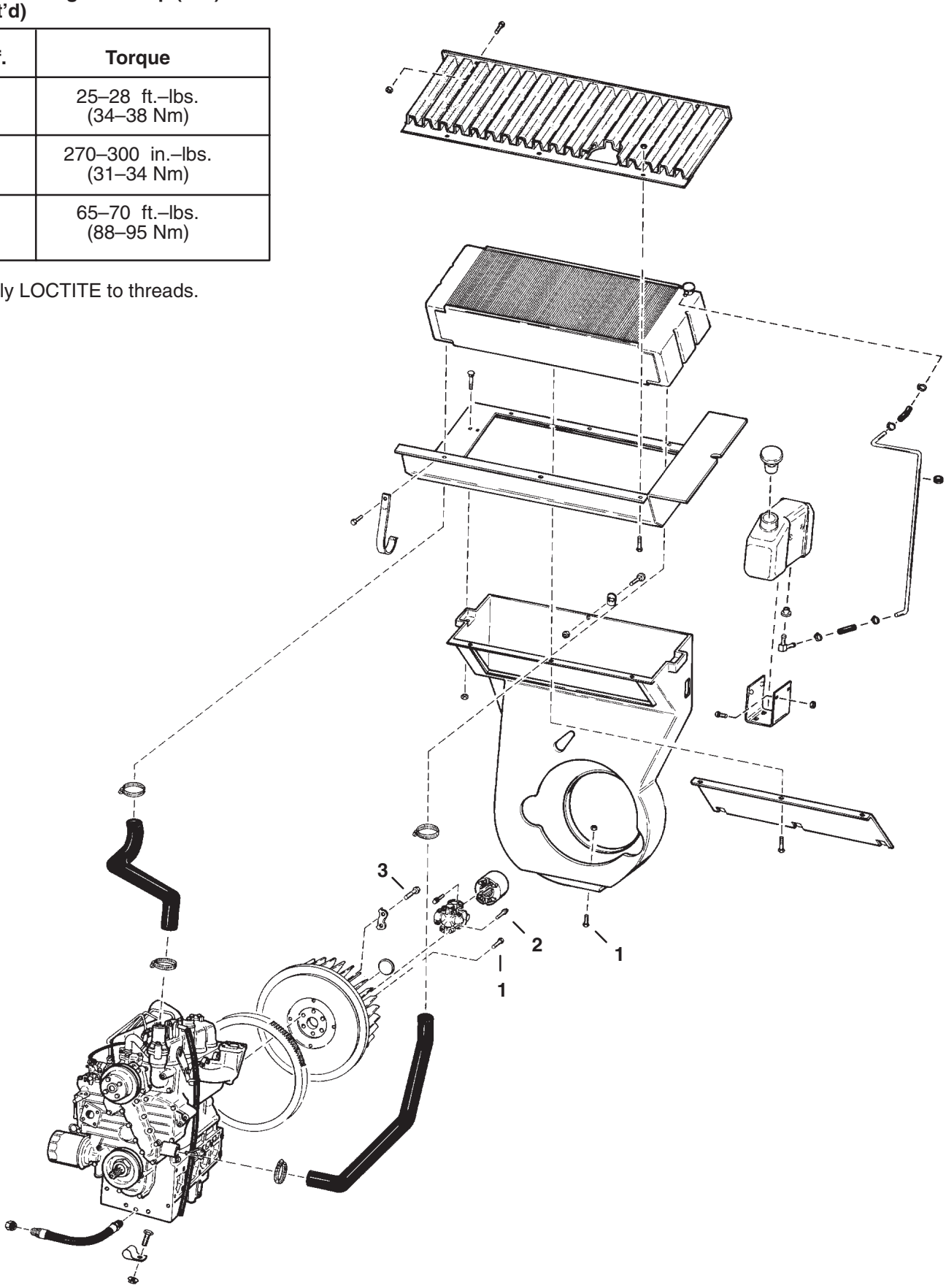

E–01382

8D–1 TORQUE SPECIFICATIONS (Cont'd)

8D–1.4 Mainframe Group (All 640 Series)

Ref.	Torque
1.	90–100 ft.–lbs. (125–135 Nm)
2.	25–28 ft.–lbs. (34–38 Nm)
3.	40–50 ft.–lbs. (54–68 Nm)
4.	190–240 in.–lbs. (21–27 Nm)
5.	180–200 in.–lbs. (21–23 Nm)
6.	55–70 ft.–lbs. (75–95 Nm)
7.	65–70 ft.–lbs. (88–95 Nm)
8.	25–35 ft.–lbs. (34–47 Nm)
9.	125–140 ft.–lbs. (170–447 Nm)
10.	18–20 ft.–lbs. (24–27 Nm)

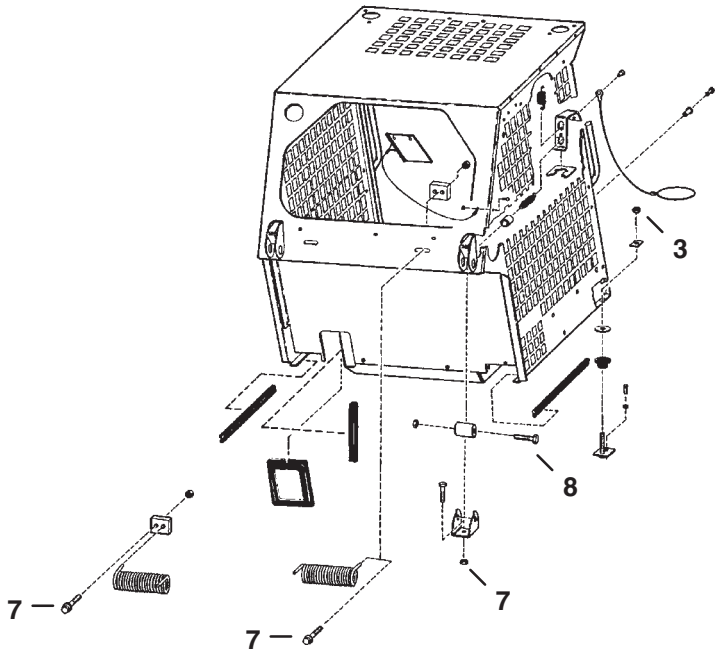

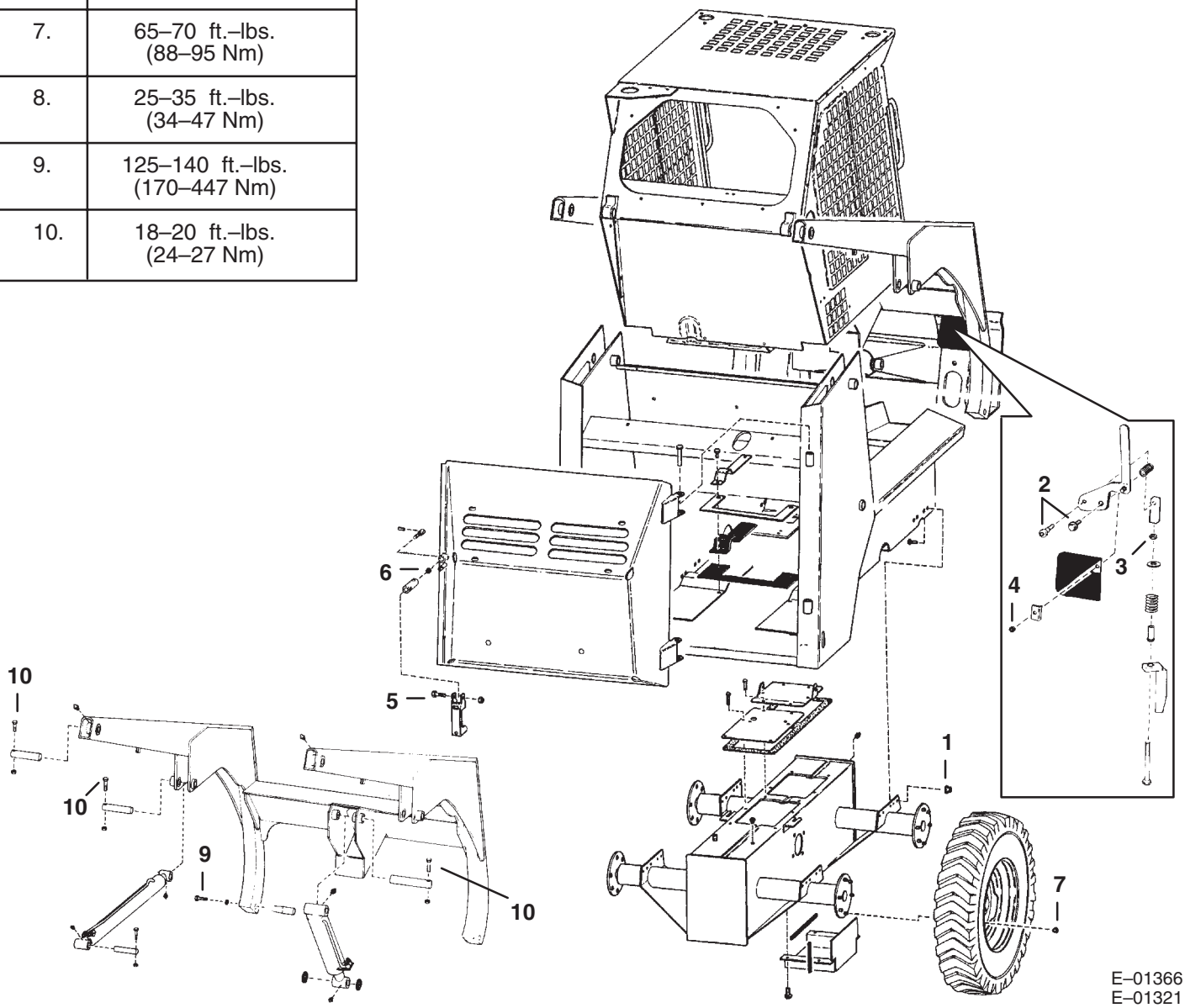

8D–1 TORQUE SPECIFICATIONS (Cont'd)

8D–1.5 Seat Bar, Fuel Tank & Panel Group

Ref.	Torque
1.	16–20 ft.–lbs. (21–27 Nm)
2.	40–45 ft.–lbs. (54–61 Nm)
3.	9–11 ft.–lbs. (12–15 Nm)
4.	25–28 ft.–lbs. (34–37 Nm)
5.*	7–8 ft.–lbs. (9–10 Nm)

* Put LOCTITE on the threads.

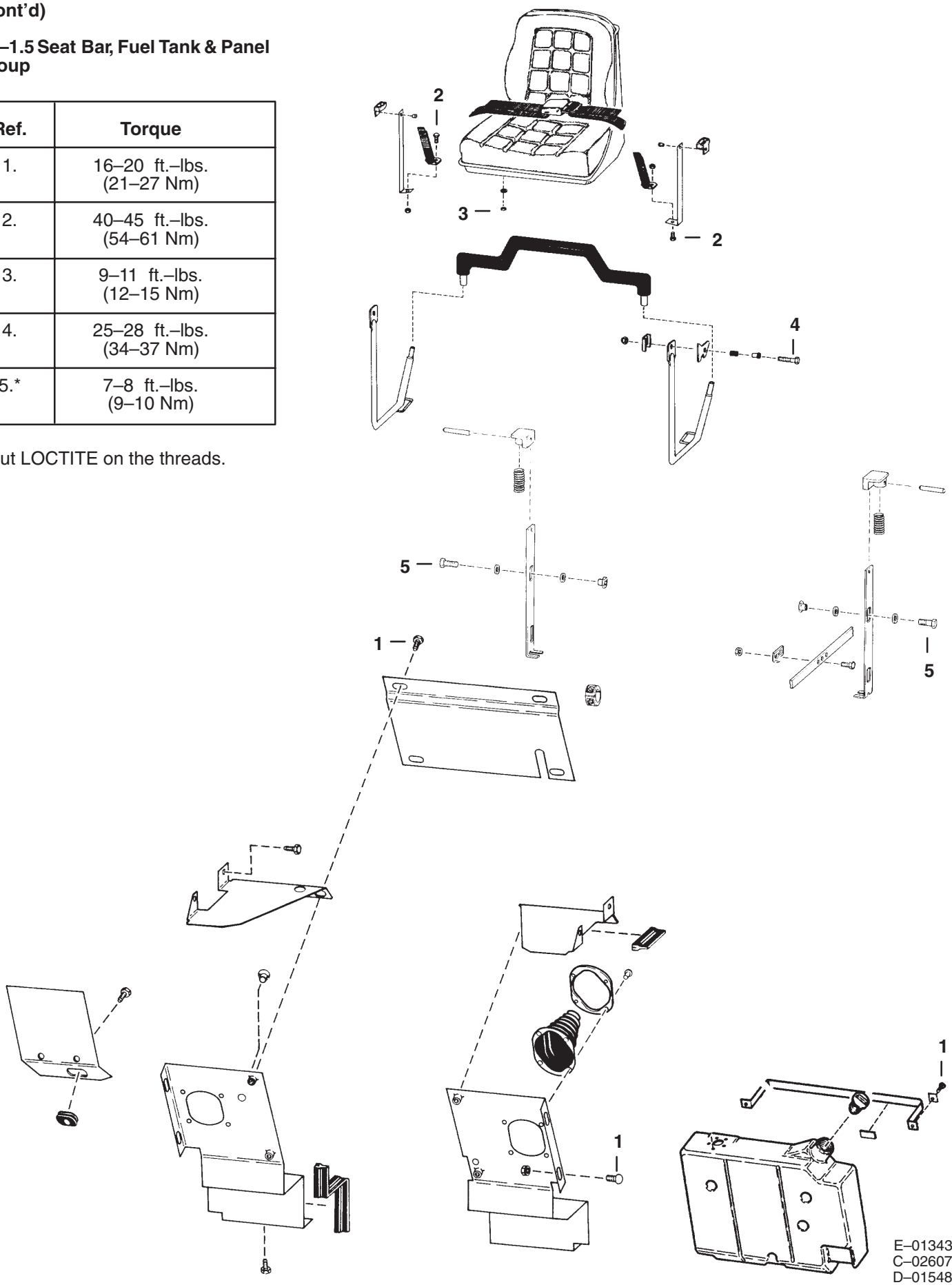

8D–1 TORQUE SPECIFICATIONS (Cont'd)

8D–1.6 Steering Levers, Linkage Pedal Group (640 Series)

Ref.	Torque
1.	25–28 ft.–lbs. (34–38 Nm)
2.	18–20 ft.–lbs. (24–27 Nm)
3.	21–25 ft.–lbs. (28–34 Nm)
4.	11–13 ft.–lbs. (15–18 Nm)
5.	20–25 ft.–lbs. (27–34 Nm)

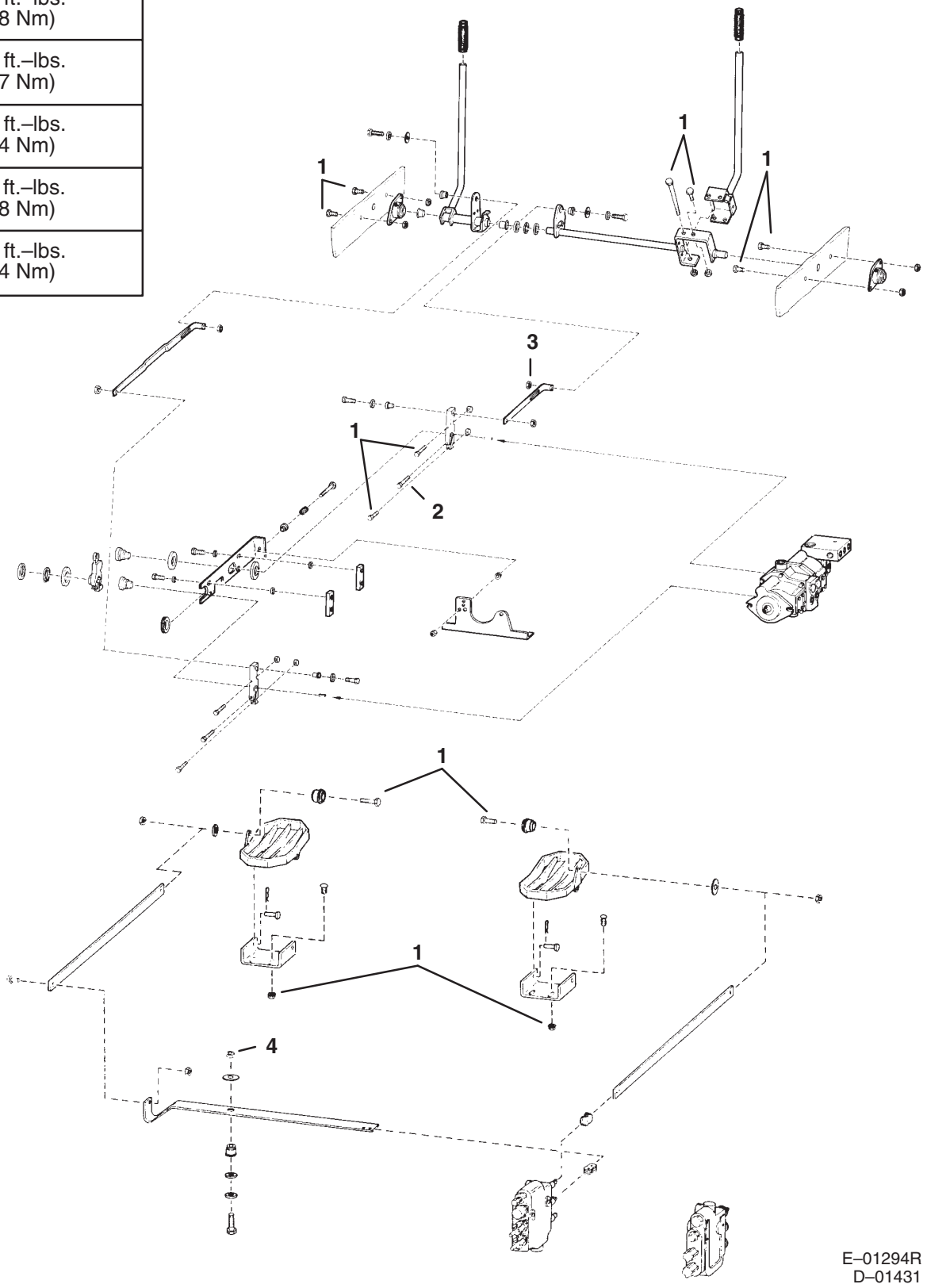

E–01294R
D–01431

8D–1 TORQUE SPECIFICATIONS (Cont'd)

8D–1.7 Brake, Axle And Chaincase Group (640 Series)

Ref.	Torque
1.	280 ft.–lbs. (380 Nm)
2.	65–70 ft.–lbs. (88–95 Nm)
3.	100–110 ft.–lbs. (136–149 Nm)
4.	210–225 ft.–lbs. (285–305 Nm)

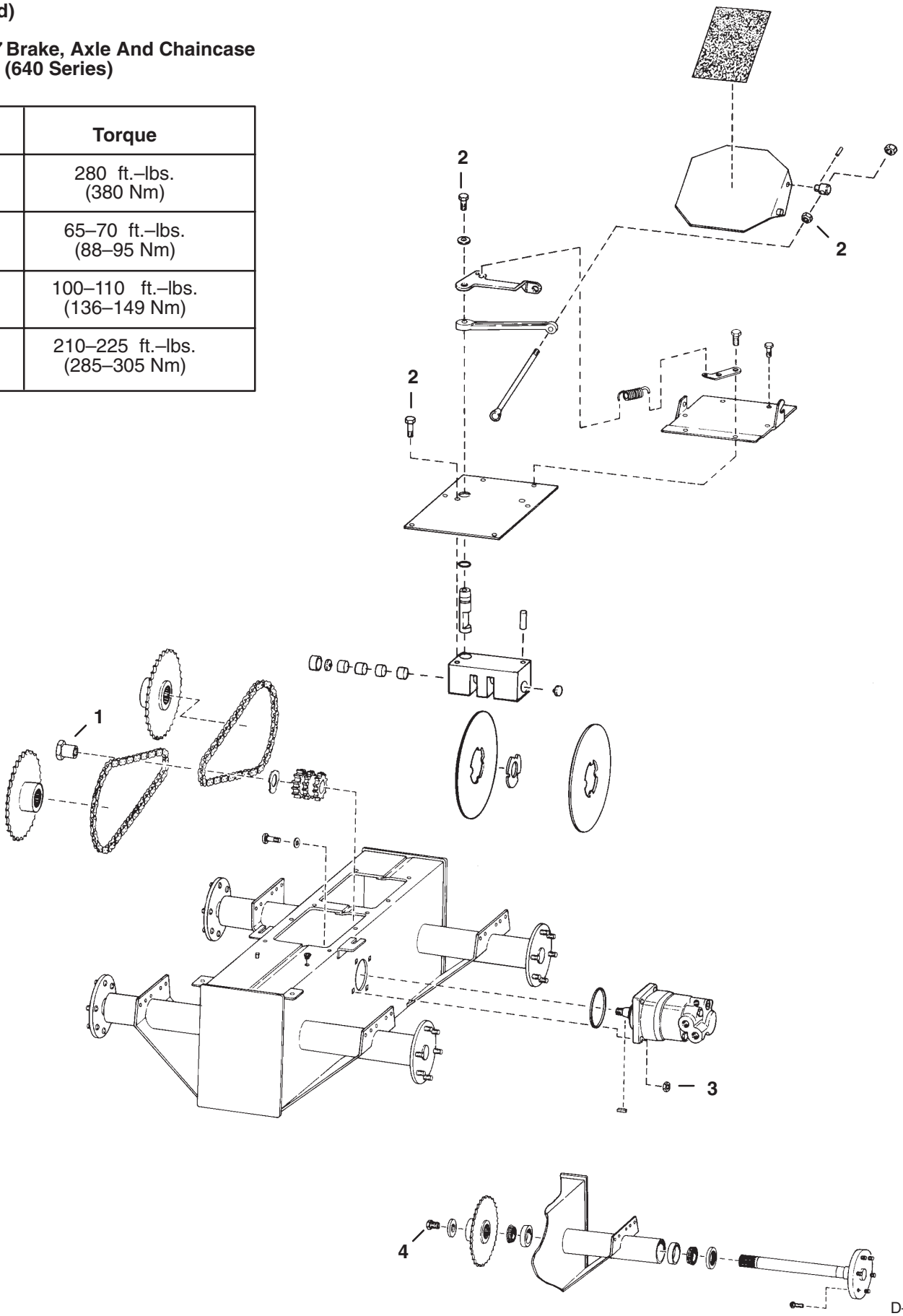

D–01383R
C–02514R
D–01565

8D–1 TORQUE SPECIFICATIONS (Cont'd)

8D–1.8 Hydraulic/Hydrostatic Group (640 Series)

Ref.	Torque
1.	40–50 ft.–lbs. (54–68 Nm)
2.	65–70 ft.–lbs. (88–95 Nm)
3.	25–28 ft.–lbs. (34–38 Nm)
4.*	20–25 ft.–lbs. (27–34 Nm)

* Put LOCTITE on the threads.

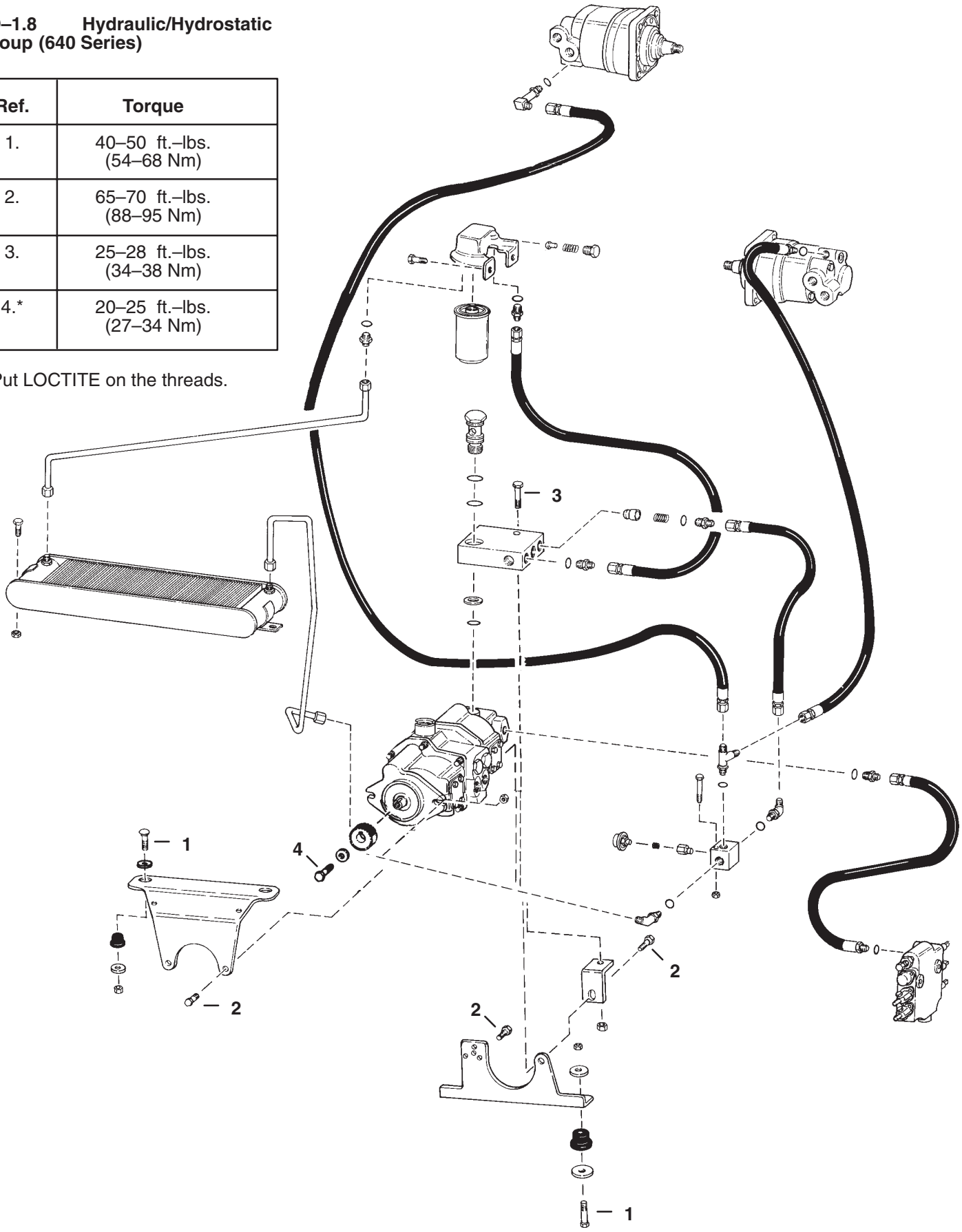

E–01364
E–01355

8D–2 HYDRAULIC/HYDROSTATIC FLUID SPECIFICATIONS

8D–2.1 Hydraulic/Hydrostatic Fluid

Use Clark hydraulic/hydrostatic transmission fluid (P/N 6563328). If this fluid is not available, use 10W–30 or 10W–40 SAE Motor Oil.

DO NOT use automatic transmission fluids in this loader or permanent damage to the transmission will result.

⚠ WARNING

Diesel fuel or hydraulic fluid under pressure can penetrate the skin or eyes. Fluid leaks under pressure may not be visible. Use a piece of cardboard or wood to find leaks but do not use bare hand. Wear safety goggles. If fluid enters skin or eyes, get immediate medical attention.

W–2310–0398

Where temperatures below zero are common, loaders must be kept in a warm building. Extra warm–up time must be used each time the loader is started during cold temperature conditions. Cold fluid will not flow easily and it makes action of the hydraulic function slower. Loss of fluid flow to the hydrostatic transmission pump (indicated by *TRANS* light ON) will cause transmission damage in less than 60 seconds time.

IMPORTANT

Stop the engine if the TRANS light comes ON and stays ON. The light indicates the loss of fluid flow to the hydrostatic pumps which will cause transmission damage in less than 60 seconds time.

I–2078–0895

8D–3 DECIMAL AND MILLIMETER EQUIVALENTS

FRACTIONS	DECIMALS	MM
1/64	0.015625	0.397
1/32	0.03125	0.794
3/64	0.046875	1.191
1/16	0.0625	1.588
5/64	0.078125	1.984
3/32	0.09375	2.381
7/64	0.109375	2.778
1/8	0.1250	3.175
9/64	0.140625	3.572
5/32	0.15625	3.969
11/64	0.171875	4.366
3/16	0.1876	4.762
13/64	0.203125	5.159
7/32	0.21875	5.556
15/64	0.234375	5.953
1/4	0.2500	6.350
17/64	0.265625	6.747
9/32	0.28125	7.144
19/64	0.296875	7.541
5/16	0.3125	7.938
21/64	0.328125	8.334
11/32	0.34375	8.731
23/64	0.359375	9.128
3/8	0.3750	9.525
25/64	0.390625	9.922
13/32	0.40625	10.319
27/64	0.421875	10.716
7/16	0.4375	11.112
29/64	0.453125	11.509
15/32	0.46875	11.906
31/64	0.484375	12.303
1/2	0.5000	12.700

1 mm = 0.03937”

FRACTIONS	DECIMALS	MM
33/64	0.515625	13.097
17/32	0.53125	13.494
35/64	0.546875	13.891
9/16	0.5625	14.288
37/64	0.578125	14.684
19/32	0.59375	15.081
39/64	0.609375	15.478
5/8	0.6250	15.875
41/64	0.640625	16.272
21/32	0.65625	16.669
43/64	0.671875	17.066
11/16	0.6875	17.462
45/64	0.703125	17.859
23/32	0.71875	18.256
47/64	0.734375	18.653
3/4	0.7500	19.050
49/64	0.765625	19.447
25/32	0.78125	19.844
51/64	0.796875	20.241
13/16	0.8125	20.638
53/64	0.828125	21.034
27/32	0.84375	21.431
55/64	0.859375	21.828
7/8	0.8750	22.225
57/64	0.890625	22.622
29/32	0.90625	23.019
59/64	0.921875	23.416
15/16	0.9375	23.812
61/64	0.953125	24.209
31/32	0.96875	24.606
63/64	0.984375	25.003
1	1.000	25.400

0.001 = 0.0254 mm

8D–4 U.S. TO METRIC CONVERSION

	TO CONVERT	INTO	MULTIPLY BY
LINEAR MEASUREMENT	Miles	Kilometers	1.609
	Yards	Meters	0.9144
	Feet	Meters	0.3048
	Feet	Centimeters	30.48
	Inches	Meters	0.0254
	Inches	Centimeters	2.54
	Inches	Millimeters	25.4
AREA	Square Miles	Square Kilometers	2.59
	Square Feet	Square Meters	0.0929
	Square Inches	Square Centimeters	6.452
	Acre	Hectare	0.4047
VOLUME	Cubic Yards	Cubic Meters	0.7646
	Cubic Feet	Cubic Meters	0.02832
	Cubic Inches	Cubic Centimeters	16.39
WEIGHT	Tons (Short)	Metric Tons	0.9078
	Pounds	Kilograms	0.4536
	Ounces (Avdp.)	Grams	28.3495
PRESSURE	Pounds/Sq. In.	Kilopascal	6.895
WORK	Foot–Pounds	Newton–Meter	1.356
LIQUID VOLUME	Quarts	Liters	0.9463
	Gallons	Liters	3.785
LIQUID FLOW	Gallons/Minute	Liters/Minute	3.785
TEMPERATURE	Fahrenheit	Celsius	1.Subtract 32° 2. Multiply by 5/9

8–5 STANDARD TORQUE SPECIFICATIONS FOR BOLTS

The following table shows standard torque specifications for bolts with zinc phosphate coating. Bolts purchased from Clark that have zinc phosphate coating are specified by the letter *H* following the part number.

	THREAD SIZE	SAE GRADE 5	SAE GRADE 8
INCH. LBS. (Nm)	0.250	80–90 (9–10)	110–120 (13–14)
	0.3125	180–200 (21–23)	215–240 (24–27)
FOOT LBS. (Nm)	0.375	25–28 (34–38)	35–40 (48–54)
	0.4375	40–45 (54–61)	60–65 (82–88)
	0.500	65–70 (88–95)	90–100 (125–135)
	0.5625	90–100 (125–135)	125–140 (170–190)
	0.625	125–140 (170–190)	175–190 (240–260)
	0.750	220–245 (300–330)	300–330 (410–450)
	0.875	330–360 (450–490)	475–525 (645–710)
	1.0	475–525 (645–710)	725–800 (985–1085)
	1.125	650–720 (880–975)	1050–1175 (1425–1600)
	1.250	900–1000 (1200–1360)	1475–1625 (2000–2200)
	1.375	1200–1350 (1630–1830)	2000–2200 (2720–2980)
	1.500	1500–1650 (2040–2240)	2600–2850 (3530–3870)
	1.625	2000–2800 (2720–2980)	3450–3800 (4680–5150)
	1.750	2500–2750 (3390–3730)	4300–4800 (5830–6500)
	1.875	3150–3500 (4270–4750)	5500–6100 (7450–8300)
	2.0	3800–4200 (5150–5700)	6500–7200 (8800–9800)

CLARK Melroe Division

bobcat

640 - 001
Bulletin Number

4 May 1982
Date

SERVICE BULLETIN

AFFECTING:

Product BOBCAT LOADER

Model 642

Serial No. 12015 and BELOW

Manual No.

SUBJECT: ENGINE EXHAUST SMOKE

ROUTE TO ATTENTION

PARTS MANAGER ☐
SERVICE MANAGER ☐
SALES MANAGER ☐
☐

PROBLEM: The engine exhaust smoke is blue when the throttle is in low idle position after the engine has been run at high idle.

CAUSE: Crankcase oil is getting past the valve seals.

NOTE: **Overfilling the crankcase with oil can also cause the engine to smoke. Be sure that the oil is at the correct level before performing the following correction.**

CORRECTION:

* Replace the valve stem seals (6513095) with new seals (6599544) (Fig. 1).

* Install crankcase breather assembly:

6599607	Separator (with o-ring & grommet)
6599445	Breather Cap
17C-408	Bolt (¼" x ½")
25E-13	Washer

Order the above parts from Clark Equipment Co., Central Parts Division, 7300 S. Cicero, Chicago, IL 60629.

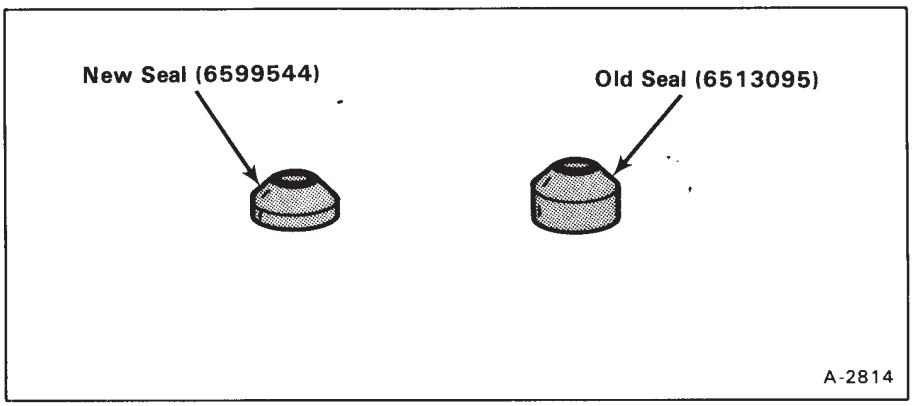

Fig. 1 Valve Stem Seals

Printed in U.S.A.

To install the valve stem seals:

NOTE: See your Service Manual for procedures which are not given in the steps below.

1. Remove the exhaust pipe, valve cover, and the cover plate (on top of the blower housing).

2. Remove the rocker assembly and the push rods.

3. Remove the spark plugs.

4. Turn the engine until both of the valves on #1 cylinder are closed.

5. Install the air hose adaptor (Fig. 2) into the #1 spark plug hole.

6. Attach an air hose to the adaptor and use an air compressor to put air into the cylinder (30 psi [207 kPa] maximum). This will hold the valves in place while removing the springs.

7. Use the spring compressor tool (made locally) (Fig. 3) as shown to compress the spring (Fig. 4).

8. Remove the keepers, rotator, valve spring and the old seal from the intake and the exhaust valves.

9. Install the new seal (6599544 — Fig. 1) over the valve stem. Install the spring, rotator and keepers.

10. Repeat steps 4 thru 9 on #2, #3 and #4 cylinders.

11. Install the push rods and the rocker assembly. Then adjust the valves to the correct specifications (See your Service Manual).

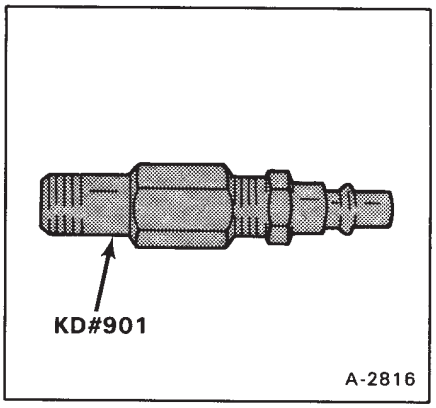

Fig. 2 Air Hose Adapter

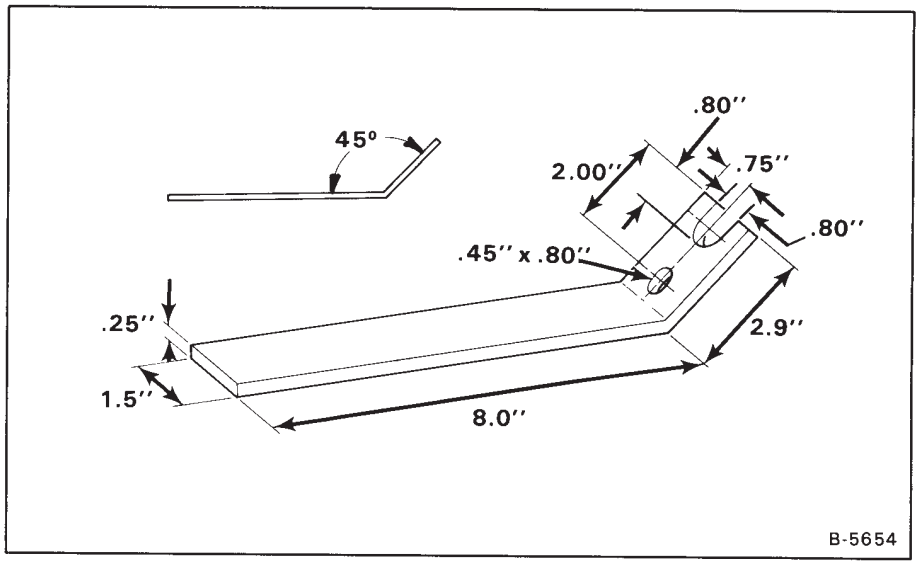

Fig. 3 Spring Compressor Tool (Made Locally)

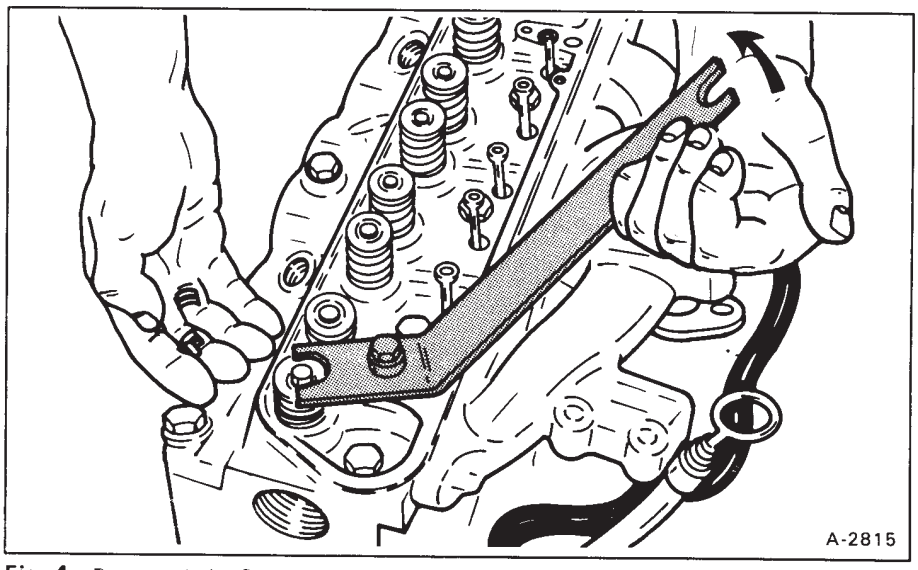

Fig. 4 Removing Valve Spring

CLARK Melroe Division

bobcat

640—002 (REV)
Bulletin Number

26 October 1982
Date

SERVICE BULLETIN

AFFECTING:

Product BOBCAT LOADER

Model 642

Serial No. 12397 & Below

Manual No.

SUBJECT: STARTER FAILURES

ROUTE TO ATTENTION

- PARTS MANAGER ☑
- SERVICE MANAGER ☑
- SALES MANAGER ☐
- ☐

Additional information about this subject is found in the following:

- Service Letter
- B.T.I. Bulletin
- Installation Inst.
- Manual Revision

NOTE: This Service Bulletin replaces Service Bulletin 640—002 dated 16 May 1982.

PROBLEM:

The starter can become damaged because of water getting into the starter housing.

CAUSE:

There is an open area on both sides of the gasket where the solenoid attaches to the starter housing.

CORRECTION:

Use RTV type sealant to fill the gap on both sides of the gasket (Fig. 1, arrows). This procedure must be done as soon as possible to prevent future starter failures.

Policy:

Melroe will pay warranty compensation as specified in the Warranty Policy and Procedure Manual.

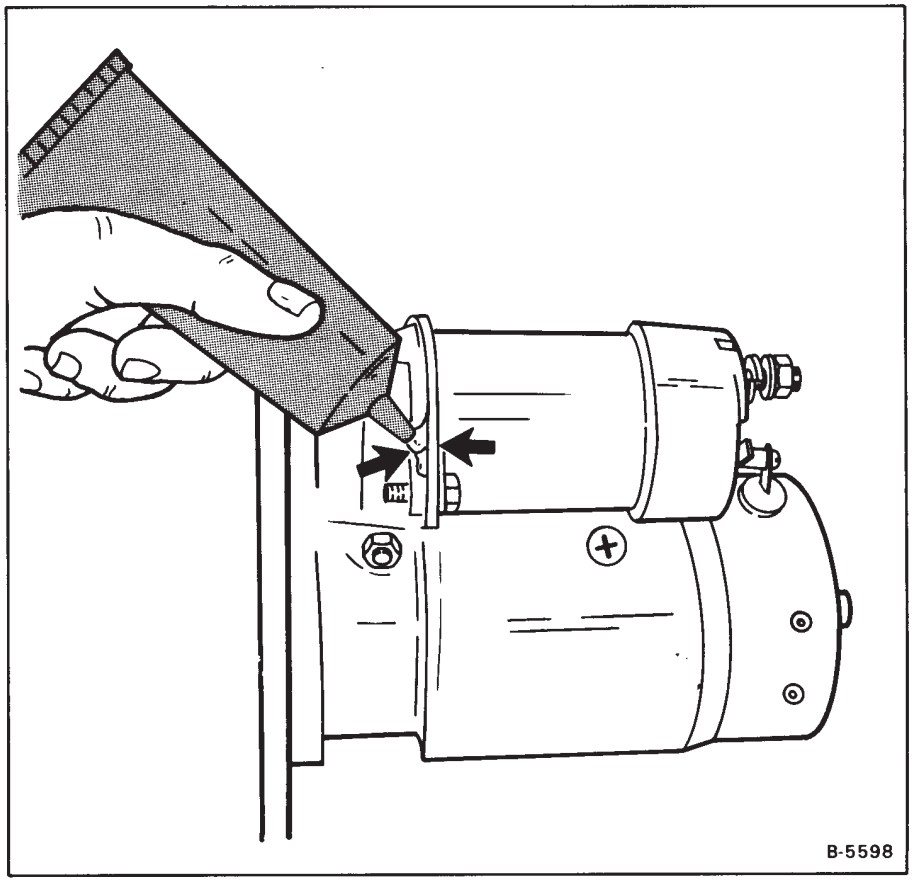

Fig. 1 Ford Engine Starter

Refer To Bulletin No.(s)

Printed in U.S.A.

MELROE
INGERSOLL-RAND

bobcat®

SERVICE MANUAL REVISION

640–3
Revision Number

22 August 1983
Date

ROUTE TO ATTENTION

PARTS MANAGER	☐
SERVICE MANAGER	X
SALES MANAGER	☐

AFFECTING:

Product BOBCAT LOADER

Model 641, 642, 643

Manual No. 6566135 (10–81)

NOTICE **Insert This Sheet With The Above Listed Manual For Future Reference.**

This Service manual Revision adds the procedure to replace the dust and inner seal, in the mounting flange, for Motor (P/N 6599718) Model 109–1052–006.

Remove pages 3–15 thru 3–20.

Add Pages Revised Aug. 83, 3–15 thru 3–20.

Printed in U.S.A.

MELROE
INGERSOLL-RAND

bobcat®

640–4
Revision Number
30 December 1983
Date

SERVICE MANUAL REVISION

ROUTE TO ATTENTION

PARTS MANAGER	☐
SERVICE MANAGER	X
SALES MANAGER	☐

AFFECTING:

Product BOBCAT LOADER

Model 641, 642, 643

Manual No. 6566135 (10–81)

NOTICE **Insert This Sheet With The Above Listed Manual For Future Reference.**

The attached pages are a revision to the 641, 642, 643 Service Manual (P/N 6566135).

Take out the following pages from the Service Manual and put in the revised pages as follows:

TAKE OUT	PUT IN
SECTION 1	
1–3, 1–4	1–3 (Revised Dec. 83), 1–4 (Revised Dec. 83)
1–5, 1–6	1–5 (Revised Dec. 83), 1–6 (Revised Dec. 83)
1–11, 1–12	1–11 (Revised Dec. 83), 1–12 (Revised Dec. 83)
1–13, 1–14	1–13 (Revised Dec. 83), 1–14 (Revised Dec. 83)
SECTION 2	
	*Hydraulic Flow Charts
2–1, 2–2	2–1, 2–2 (Revised Dec. 83)
2–3, 2–4	2–3 (Revised Dec. 83), 2–4 (Revised Dec. 83)
2–5, 2–6	2–5 (Revised Dec. 83), 2–6
2–11, 2–12	2–11 (Revised Dec. 83), 2–12 (Revised Dec. 83)
2–17, 2–18	2–17 (Revised Dec. 83), 2–18 (Revised Dec. 83)
2–19, 2–20	2–19 (Revised Dec. 83), 2–20
SECTION 3	
	*Hydrostatic Flow Chart
3–7, 3–8	3–7 (Revised Dec. 83), 3–8 (Revised Dec. 83)
3–9, 3–10	3–9 (Revised Dec. 83), 3–10 (Revised Dec. 83)
3–11, 3–12	3–11 (Revised Dec. 83), 3–12 (Revised Dec. 83)
3–19 (Revised Aug. 83), 3–19a (Added Aug. 83)	3–19 (Revised Dec. 83), 3–19a (Revised Dec. 83)
3–20 (Revised Aug. 83)	3–20 (Revised Dec. 83), 3–20a (Added Dec. 83)
3–21, 3–22	3–21 (Revised Dec. 83), 3–22 (Revised Dec. 83)
3–23, 3–24	3–23 (Revised Dec. 83), 3–24 (Revised Dec. 83)
3–25, 3–26	3–25 (Revised Dec. 83), 3–26
3–35	3–35 (Revised Dec. 83)

Printed in U.S.A.

	TAKE OUT	PUT IN
SECTION 4		
	4–1, 4–2	4–1, 4–2 (Revised Dec. 83)
	4–3, 4–4	1–5 (Revised Dec. 83), 4–4 (Revised Dec. 83)
	4–7, 4–8	4–7 (Revised Dec. 83), 4–8 (Revised Dec. 83)
SECTION 5		
	5–7, 5–8	5–7 (Revised Dec. 83), 5–8
SECTION 6		
		*Electrical Charts
	6–7, 6–8	6–7 (Revised Dec. 83), 6–8
SECTION 7A		
	7A–21, 7A–22	7A–21, 7A–22 (Revised Dec. 83
	7A–23, 7A–24	7A–23 (Revised Dec. 83), 7A–24 (Revised Dec. 83)
SECTION 7B		
	7B–3, 7B–4	7B–3 (Revised Dec. 83), 7B–4 (Revised Dec. 83)
	7B–7, 7B–8	7B–7 (Revised Dec. 83), 7B–8 (Revised Dec. 83)
	7B–9, 7B–10	7B–9 (Revised Dec. 83), 7B–10
SECTION 7C		
	7C–1, 7C–2	7C–1, 7C–2 (Revised Dec. 83)
	7C–3, 7C–4	7C–3, 7C–4 (Revised Dec. 83)
	7C–7, 7C–8	7C–7 (Revised Dec. 83), 7C–8
	7C–9, 7C–10	7C–9 (Revised Dec. 83), 7C–10
	7C–11, 7C–12	7C–11, 7C–12 (Revised Dec. 83)
	7C–13, 7C–14	7C–13 (Revised Dec. 83), 7C–14
	7C–15, 7C–16	7C–15, 7C–16 (Revised Dec. 83)
	7C–17, 7C–18	7C–17 (Revised Dec. 83), 7C–18
	7C–19, 7C–20	7C–19 (Revised Dec. 83), 7C–20 (Revised Dec. 83)
	7C–21, 7C–22	7C–21, 7C–22 (Revised Dec. 83)
SECTION 8A		
	8A–5	8A–5 (Revised Dec. 83)
SECTION 8B		
	8B–3, 8B–4	8B–3 (Revised Dec. 83), 8B–4 (Revised Dec. 83)
	8B–5, 8B–6	8B–5 (Revised Dec. 83), 8B–6
SECTION 8C		
	8C–3, 8C–4	8C–3 (Revised Dec. 83), 8C–4
SECTION 8D		
	8D–5, 8D–6	8D–5, 8D–6 (Revised Dec. 83)
	8D–7, 8D–8	8D–7, 8D–8 (Revised Dec. 83)
	8D–9, 8D–10	8D–9 (Revised Dec. 83), 8D–10 (Revised Dec. 83)
	8D–11, 8D–12	8D–11 (Revised Dec. 83), 8D–12

***Put these charts in the manual after the charts that are already in the manual. DO NOT remove the charts that are already in the manual.**

MELROE
INGERSOLL-RAND

bobcat®

640–5
Revision Number
26 March 1984
Date

SERVICE MANUAL REVISION

ROUTE TO ATTENTION

PARTS MANAGER	☐
SERVICE MANAGER	X
SALES MANAGER	☐

AFFECTING:

Product BOBCAT LOADER

Model 641, 642, 643

Manual No. 6566135 (10–81)

NOTICE **Insert This Sheet With The Above Listed Manual For Future Reference.**

The attached sheets are a revision to the 641, 642, 643 Service Manual (P/N 6566135).

Take out the following pages from the Service Manual and put in the revised or added pages as follows:

TAKE OUT	PUT IN
There is a Hydraulic/Hydrostatic Flow Chart (P/N 6566853) included in this revision. Remove the OLD Hydraulic and Hydrostatic Flow Charts.	Hydraulic/Hydrostatic Flow Chart (P/N 6566853) (Put in at the front of Section Two)

NOTE: Do not remove the Hydraulic Flow Chart (P/N 6566687) or Hydrostatic Flow Chart (P/N 6566688).

3–11 (Revised Dec. 83), 3–12 (Revised Dec. 83)	3–11 (Revised Dec. 83), 3–12 (Revised Mar. 84)
3–15 (Revised Aug. 83), 3–16 (Revised Aug. 83)	3–15 (Revised Mar. 84), 3–13 (Revised Mar. 84)
3–17 (Revised Aug. 83), 3–18 (Revised Aug. 83)	3–17 (Revised Mar. 84), 3–17 (Revised Mar. 84)
3–19 (Revised Aug. 83), 3–19a (Revised Dec. 83)	3–19 (Revised Mar. 84), 3–19a (Revised Dec. 83)
3–20 (Revised Dec. 83), 3–20a (Added Dec. 83)	3–20 (Revised Dec. 83), 3–20a (Added Mar. 84)
3–21 (Revised Dec. 83), 3–22 (Revised Dec. 83)	3–21 (Revised Mar. 84), 3–22 (Revised Dec. 83)
3–23 (Revised Dec. 83), 3–24 (Revised Dec. 83)	3–23 (Revised Dec. 83), 3–24 (Revised Mar. 84)
3–35 (Revised Dec. 83)	3–35 (Revised Dec. 83), 3–36 (Added Mar. 84)

Printed in U.S.A.

MELROE
INGERSOLL-RAND

bobcat®

640–6
Revision Number

18 April 1984
Date

SERVICE MANUAL REVISION

ROUTE TO ATTENTION

PARTS MANAGER	☐
SERVICE MANAGER	X
SALES MANAGER	☐

AFFECTING:

Product BOBCAT LOADER

Model 641, 642, 643

Manual No. 6566135 (10–81)

NOTICE **Insert This Sheet With The Above Listed Manual For Future Reference.**

This is a revision to the 641, 642, 643 Service Manual .

Take out and put in the revised pages as follows:

TAKE OUT	PUT IN
7C–19 (Revised Dec. 83), 7C–20 (Revised Dec. 83)	7C–19 (Revised Dec. 83), 7C–20 (Revised Apr. 84)
8C–3 (Revised Dec. 83), 8–4	8C–3 (Revised Dec. 83), 8–4 (Revised Apr. 84)

Printed in U.S.A.

MELROE
INGERSOLL-RAND

bobcat®

SERVICE MANUAL REVISION

640–7
Revision Number
20 June 1984
Date

ROUTE TO ATTENTION

PARTS MANAGER	☐
SERVICE MANAGER	X
SALES MANAGER	☐

AFFECTING:

Product BOBCAT LOADER

Model 641, 642, 643

Manual No. 6566135 (10–81)

NOTICE **Insert This Sheet With The Above Listed Manual For Future Reference.**

The attached Hydraulic Flow Chart P/N 6566687 replaces Hydraulic Flow Chart P/N 6566687 dated September 1983 in the front of the Hydraulic Section of your 640 Series Service Manual.

Remove Chart P/N 6566687 dated September 1983 and insert Chart P/N 6566687 dated June 1984.

Also attached are two labels for Hydrostatic Chart P/N 6566688 located in the front of the Hydrostatic Section of your Service Manual. Apply the stickers to the front and back of the chart over the heading.

Printed in U.S.A.

MELROE
INGERSOLL-RAND

bobcat®

640–8
Revision Number

31 August 1984
Date

SERVICE MANUAL REVISION

ROUTE TO ATTENTION

PARTS MANAGER	☐
SERVICE MANAGER	X
SALES MANAGER	☐

AFFECTING:

Product BOBCAT LOADER

Model 641, 642, 643

Manual No. 6566135 (10–81)

NOTICE **Insert This Sheet With The Above Listed Manual For Future Reference.**

The attached pages are a revision to the 641, 642, 643 Service Manual (P/N 6566135).

Take out the following pages from the Service Manual and put in the revised or added pages:

TAKE OUT	PUT IN
1–3 (Revised Dec. 83), 1–4	1–3 (Revised Aug. 84), 1–4
1–17, 1–18	1–17, 1–18 (Revised Aug. 84)
1–19, 1–20	1–19 (Revised Aug. 84), 1–20
3–5, 3–6	3–5 (Revised Aug. 84), 3–6 (Revised Aug. 84)
3–11 (Revised Dec. 83), 3–12 (Revised Mar. 84)	3–11 (Revised Aug. 84), 3–12 (Revised Aug. 84)
	3–12a (Added Aug. 84)
3–20 (Revised Dec. 83), 3–20a (Revised Mar. 84)	3–20 (Revised Aug. 84), 3–20a (Revised Aug. 84)
3–21 (Revised Mar. 84), 3–22 (Revised Dec. 83)	3–21 (Revised Aug. 84), 3–22 (Revised Aug. 84)
3–23 (Revised Dec. 83), 3–24 (Revised Mar. 84)	3–23 (Revised Aug. 84), 3–24 (Revised Mar. 84)
3–31, 3–32	3–31 (Revised Aug. 84), 3–22
3–33, 3–34	3–33 (Revised Aug. 84), 3–33a (Added Aug. 84)
	3–33b (Added Aug. 84), 3–34
3–35 (Revised Dec. 83), 3–36 (Added Mar. 84)	3–35 (Revised Dec. 83), 3–36 (Revised Aug. 84)
6–5, 6–6	6–5 (Revised Aug. 84), 6–6 (Revised Aug. 84)
7B–5, 7B–6	7B–5 (Revised Aug. 84), 7B–6
8A–5	8A–5 (Revised Aug. 84)
8C–5	8C–5 (Revised Aug. 84)

Printed in U.S.A.

MELROE
INGERSOLL-RAND

bobcat®

640–9
Revision Number

10 July 1985
Date

SERVICE MANUAL REVISION

ROUTE TO ATTENTION

PARTS MANAGER	☐
SERVICE MANAGER	X
SALES MANAGER	☐

AFFECTING:

Product BOBCAT LOADER

Model 641, 642, 643

Manual No. 6566135 (10–81)

NOTICE **Insert This Sheet With The Above Listed Manual For Future Reference.**

The attached sheets are a revision to the 641, 642, 643 Service Manual (P/N 6566135).

This revision includes new information on Pump Alignment.

Remove the following pages from the Service Manual and put in the revised pages as follows:

TAKE OUT	PUT IN
3–23 (Revised Aug. 84), 3–24 (Revised Mar. 84)	3–23 (Revised Aug. 84), 3–24 (Revised July 85)

Printed in U.S.A.

MELROE
INGERSOLL-RAND

bobcat®

SERVICE MANUAL REVISION

640–10
Revision Number

25 August 1986
Date

ROUTE TO ATTENTION

PARTS MANAGER	☐
SERVICE MANAGER	X
SALES MANAGER	☐

AFFECTING:

Product BOBCAT LOADER

Model 641, 642, 643

Manual No. 6566135 (10–81)

NOTICE **Insert This Sheet With The Above Listed Manual For Future Reference.**

This Service Manual Revision will update the Hydraulic and Hydrostatic Flow Charts located at the beginning of Section 2 & 3 of your 640 Service Manual 6566135 (10–81 and newer).

TAKE OUT	PUT IN
6566687 Hydraulic Flow chart (Printed June 1984)	6570266 (7–86) Hydraulic/Hydrostatic Flow Chart (Page 1 of 2)
6566688 Hydrostatic Flow Chart (Printed June 1984)	6570287 (7–86) Bucket Position Flow Chart (Optional)

Printed in U.S.A.

MELROE
INGERSOLL-RAND

bobcat®

640–11
Revision Number
14 April 1989
Date

SERVICE MANUAL REVISION

ROUTE TO ATTENTION

PARTS MANAGER	☐
SERVICE MANAGER	X
SALES MANAGER	☐

AFFECTING:

Product BOBCAT LOADER

Model 641, 642, 643

Manual No. 6566135 (10–81)

NOTICE **Insert This Sheet With The Above Listed Manual For Future Reference.**

This is a revision to the Service Manual (6566135). Remove the old pages and install the revised pages as shown below:

TAKE OUT	PUT IN
Hydraulic/Hydrostatic Flow Chart #6570266 (Printed July 86)	Hydraulic/Hydrostatic Flow Chart #6570266 (Printed April 89)
Cab Wiring Diagram (P/N 6720033) (Printed Nov. 1988)	Cab Wiring Diagram (P/N 6720033) (Revised April 1989)
7C–9 (Revised Oct. 83), 7C–10 7C–11, 7C–12 (Revised Dec. 83)	7C–9 (Revised Apr. 89), 7C–10 7C–11 (Revised Apr. 89), 7C–12 (Revised Apr. 89)
8A–3, 8A–4 8A–5 (Revised Aug. 84)	8A–3 (Revised Apr. 89), 8A–4 (Revised Apr. 89) 8A–5 (Revised Apr. 89)
8B–5 (Revised Dec. 83), 8B–6 8B–7	8B–5 (Revised Dec. 83), 8B–5 (Revised Apr. 89) 8B–7 (Revised Apr. 89)
8C–1, 8C–2 8C–3 (Revised Dec. 83), 8C–4 (Revised Apr. 84)	8C–1 (Revised Apr. 89), 8C–2 (Revised Apr. 89) 8C–3 (Revised Apr. 89), 8C–4 (Revised Apr. 89)

Printed in U.S.A.

MELROE
INGERSOLL-RAND

bobcat®

640–12
Revision Number

7 August 1989
Date

SERVICE MANUAL REVISION

ROUTE TO ATTENTION

PARTS MANAGER	☐
SERVICE MANAGER	X
SALES MANAGER	☐

AFFECTING:

Product BOBCAT LOADER

Model 641, 642, 643

Manual No. 6566135 (10–86)

NOTICE **Insert This Sheet With The Above Listed Manual For Future Reference.**

This is a revision to the Service Manual (6566135). Remove the old pages and install the revised pages as shown below:

TAKE OUT	PUT IN
Operator Guard Wiring Diagram	Cab Wiring Diagram (P/N 6566808) (Printed April 1988)
Engine Wiring Diagram 641 & 741	Cab Wiring Diagram (P/N 6566807) (Printed April 1988)
Engine Wiring Diagram 642 & 742	Engine Wiring Diagram (P/N 6566809) (Printed April 1988)
Engine Wiring Diagram 643	Engine Wiring Diagram (P/N 6566810) (Printed April 1988)
Operator Cab Wiring Diagram 6566807 (Printed Sept. 1983)	Engine Wiring Diagram (P/N 6566811) (Printed April 1988)
Engine Wiring Diagram #6566791 (Printed Sept. 1983)	
Engine Wiring Diagram #6566790 (Printed Sept. 1983)	
Engine Wiring Diagram #6566792 (Printed Sept. 1983)	

Printed in U.S.A.

MELROE
INGERSOLL-RAND

bobcat®

640–13
Revision Number

24 April 1990
Date

SERVICE MANUAL REVISION

ROUTE TO ATTENTION

PARTS MANAGER	☐
SERVICE MANAGER	X
SALES MANAGER	☐

AFFECTING:

Product BOBCAT LOADER

Model 641, 642, 643

Manual No. 6566135 (10–86)

NOTICE **Insert This Sheet With The Above Listed Manual For Future Reference.**

The attached pages are a revision to the Service Manual. Please replace existing pages with new pages, as follows:

TAKE OUT	PUT IN
7C–22, 7C–23	7C–22, 7C–23 (Revised Apr. 90)

Printed in U.S.A.

MELROE
INGERSOLL-RAND

bobcat®

640–14
Revision Number

4 October 1990
Date

SERVICE MANUAL REVISION

ROUTE TO ATTENTION

PARTS MANAGER	☐
SERVICE MANAGER	X
SALES MANAGER	☐

AFFECTING:

Product BOBCAT LOADER

Model 641, 642, 643

Manual No. 6566135 (10–86)

NOTICE **Insert This Sheet With The Above Listed Manual For Future Reference.**

This is a revision to the 641, 642, 643 Service Manual (P/N 6566135).

Take out and put in the revised pages as listed below:

TAKE OUT	PUT IN
7C–9 (Revised Apr. 89), 7C–10 (Revised Apr. 89) 7C–17 (Revised Dec. 83), 7C–18	7C–9 (Revised Apr. 89), 7C–10 (Revised Oct. 90) 7C–17 (Revised Oct. 90), 7C–18
8C–3 (Revised Apr. 89), 8C–4 (Revised Apr. 89)	8C–3 (Revised Apr. 89), 8C–4 (Revised Oct. 90)

Printed in U.S.A.

MELROE
INGERSOLL-RAND

bobcat®

SERVICE MANUAL REVISION

640–15
Revision Number

6 June 1991
Date

ROUTE TO ATTENTION

PARTS MANAGER ☐
SERVICE MANAGER ☒
SALES MANAGER ☐

AFFECTING:

Product BOBCAT LOADER

Model 641, 642, 643

Manual No. 6566135 (10–86)

NOTICE **Insert This Sheet With The Above Listed Manual For Future Reference.**

This is a revision to the 641, 642, 643 Service Manual (P/N 6566135).

Take out and put in the revised pages as listed below:

TAKE OUT	PUT IN
7C–11 (Revised Apr. 89), 7C–12 (Revised Apr. 89)	7C–11 (Revised June 91), 7C–12 (Revised June 91)
8C–3 (Revised Oct. 90), 8C–4 (Revised Oct. 90)	8C–3 (Revised June 91), 8C–4 (Revised Oct. 90)

Printed in U.S.A.

MELROE
INGERSOLL-RAND

bobcat®

640–16
Revision Number

7 August 1991
Date

SERVICE MANUAL REVISION

ROUTE TO ATTENTION

PARTS MANAGER	☐
SERVICE MANAGER	X
SALES MANAGER	☐

AFFECTING:

Product BOBCAT LOADER

Model 641, 642, 643

Manual No. 6566135 (10–86)

NOTICE **Insert This Sheet With The Above Listed Manual For Future Reference.**

This is a revision to the 641, 642, 643 Service Manual (P/N 6566135).

Take out and put in the revised pages as listed below:

TAKE OUT	PUT IN
3–3, 3–4	3–3 (Revised Aug. 91), 3–4

Printed in U.S.A.

MELROE
INGERSOLL-RAND

bobcat®

SERVICE MANUAL REVISION

640–17
Revision Number

21 July 1992
Date

ROUTE TO ATTENTION

PARTS MANAGER ☐
SERVICE MANAGER ☒
SALES MANAGER ☐

AFFECTING:

Product BOBCAT LOADER

Model 641, 642, 643

Manual No. 6566135 (10–86)

NOTICE **Insert This Sheet With The Above Listed Manual For Future Reference.**

Take out the following pages and put in the revised pages as follows:

TAKE OUT	PUT IN
	643 ENGINE WIRING DIAGRAM (P/N 6722270) Model 643 (Printed July 1992)

Printed in U.S.A.

MELROE
INGERSOLL-RAND

bobcat®

SERVICE MANUAL REVISION

640–18
Revision Number

26 August 1992
Date

ROUTE TO ATTENTION

PARTS MANAGER	☐
SERVICE MANAGER	X
SALES MANAGER	☐

AFFECTING:

Product BOBCAT LOADER

Model 641, 642, 643

Manual No. 6566135 (10–86)

NOTICE **Insert This Sheet With The Above Listed Manual For Future Reference.**

Take out the following pages and put in the revised pages as follows:

TAKE OUT	PUT IN
	HYDRAULIC/HYDROSTATIC FLOW CHART (P/N 6722238) 643 (Printed August 1992)

Printed in U.S.A.

MELROE
INGERSOLL-RAND

bobcat®

SERVICE MANUAL REVISION

640–19
Revision Number

11 February 1993
Date

ROUTE TO ATTENTION

PARTS MANAGER	☐
SERVICE MANAGER	X
SALES MANAGER	☐

AFFECTING:

Product BOBCAT LOADER

Model 641, 642, 643

Manual No. 6566135 (10–86)

NOTICE **Insert This Sheet With The Above Listed Manual For Future Reference.**

Take out the following pages and put in the revised pages as follows:

TAKE OUT	PUT IN
MAIN FRAME – TAB PAGE	MAIN FRAME – TAB PAGE (Revised Feb. 93)
5–3, 5–4	5–3 (Revised Feb. 93), 5–4
5–11	5–11, 5–12 (Added Feb. 93)
	5–13 (Added Feb. 93), 5–14 (Added Feb. 93)
	5–15 (Added Feb. 93), 5–16 (Added Feb. 93)

Printed in U.S.A.

MELROE
INGERSOLL-RAND

bobcat®

640–20
Revision Number

4 November 1996
Date

SERVICE MANUAL REVISION

ROUTE TO ATTENTION

PARTS MANAGER	☐
SERVICE MANAGER	X
SALES MANAGER	☐

AFFECTING:

Product BOBCAT LOADER

Model 641, 642, 643

Manual No. 6566135 (10–86)

NOTICE **Insert This Sheet With The Above Listed Manual For Future Reference.**

The following pages are a revision to the 641, 642, 643 Service Manual 6566135 (10–86).

Take out the pages shown and put in the revised pages as follows:

TAKE OUT	PUT IN
3–5 (Revised Aug. 84), 3–6 (Revised Aug. 84) 3–35 (Revised Dec. 83), 3–36 (Revised Aug. 84)	3–5 (Revised Nov. 96), 3–6 (Revised Aug. 84) 3–35 (Revised Dec. 83), 3–36 (Revised Nov. 96)
7A–11, 7A–12 7A–13, 7A–14 7A–15, 7A–16 7A–17, 7A–18	7A–11, 7A–12 (Revised Nov. 96) 7A–13 (Revised Nov. 96), 7A–14 (Revised Nov. 96) 7A–15 (Revised Nov. 96), 7A–16 7A–17 (Revised Nov. 96), 7A–18
8D–9 (Revised Dec. 83), 8D–10 (Revised Dec. 83)	8D–9 (Revised Dec. 83), 8D–10 (Revised Nov. 96)

Printed in U.S.A.

SERVICE MANUAL REVISION

ROUTE TO ATTENTION	
PARTS MANAGER	
SERVICE MANAGER	X
SALES MANAGER	

NOTICE **Insert This Sheet With The Below Listed Manual For Future Reference.**

Revision No: 640-21
Date: 15 June 2012
Product: Bobcat Loader
Model: 641, 642, 643
Manual No: 6566135 (10-86)

The following Sections are a revision to the above Service Manual.

COVER	

Bobcat®